Adjustable 500mA Single Resistor Low Dropout Regulator

FEATURES

- **Outputs May be Paralleled for Higher Current and Heat Spreading**
- **Output Current: 500mA**
- **Single Resistor Programs Output Voltage**
- **1% Initial Accuracy of SET Pin Current**
- **Output Adjustable to 0V**
- **Current Limit Constant with Temperature**
- **Low Output Noise: 40μV_{RMS} (10Hz to 100kHz)**
- **Wide Input Voltage Range: 1.2V to 36V**
- **Low Dropout Voltage: 275mV**
- < 1mV Load Regulation
- < 0.001%/ V Line Regulation
- Minimum Load Current: 0.5mA
- Stable with Minimum 2.2μF Ceramic Capacitor
- Current Limit with Foldback and Overtemperature Protected
- 8-Lead MSOP, and 6-Lead 2mm × 3mm DFN Packages
- AEC-Q100 Qualified for Automotive Applications

APPLICATIONS

- High Current All Surface Mount Supply
- High Efficiency Linear Regulator
- Post Regulator for Switching Supplies
- Low Parts Count Variable Voltage Supply
- Low Output Voltage Power Supplies

DESCRIPTION

The LT®3085 is a 500mA low dropout linear regulator that can be paralleled to increase output current or spread heat on surface mounted boards. Designed as a precision current source and voltage follower, this new regulator finds use in many applications requiring high current, adjustability to zero, and no heat sink. The device also brings out the collector of the pass transistor to allow low dropout operation—down to 275mV—when used with a second supply.

A key feature of the LT3085 is the capability to supply a wide output voltage range. By using a reference current through a single resistor, the output voltage is programmed to any level between zero and 36V. The LT3085 is stable with 2.2μF of capacitance on the output, and the IC uses small ceramic capacitors that do not require additional ESR as is common with other regulators.

Internal protection circuitry includes current limiting and thermal limiting. The LT3085 is offered in the 8-lead MSOP and a low profile (0.75mm) 6-lead 2mm × 3mm DFN package (both with an Exposed Pad for better thermal characteristics).

All registered trademarks and trademarks are the property of their respective owners.

TYPICAL APPLICATION

Variable Output Voltage 500mA Supply

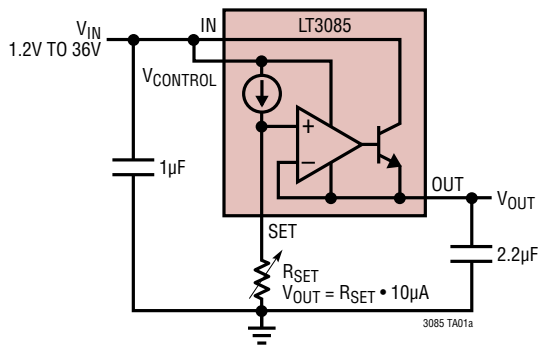

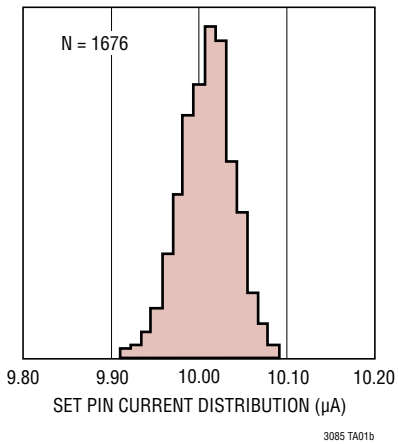

ABSOLUTE MAXIMUM RATINGS

(Note 1) All Voltages Relative to V_{OUT}

$V_{CONTROL}$ Pin Voltage .....40V, –0.3V
IN Pin Voltage .....40V, –0.3V
SET Pin Current (Note 7) ..... ±15mA
SET Pin Voltage (Relative to OUT) ..... ±10V
Output Short-Circuit Duration ..... Indefinite

Operating Junction Temperature Range (Notes 2, 10)
E, I Grade..... –40°C to 125°C
MP Grade..... –55°C to 125°C
Storage Temperature Range ..... –65°C to 150°C
Lead Temperature (Soldering, 10 sec)
MS8E Package Only.....300°C

PIN CONFIGURATION

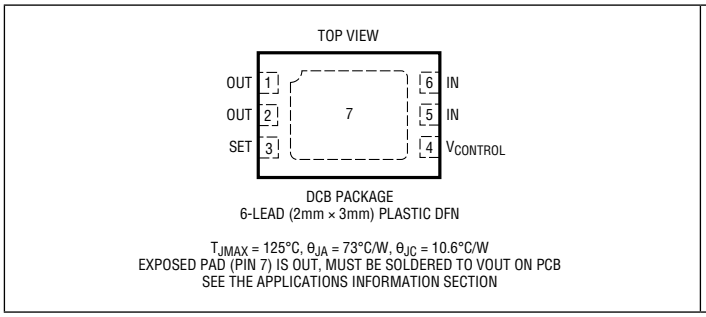

DCB PACKAGE
6-LEAD (2mm × 3mm) PLASTIC DFN

T_{JMAX} = 125°C, θ_{JA} = 73°C/W, θ_{JC} = 10.6°C/W
EXPOSED PAD (PIN 7) IS OUT, MUST BE SOLDERED TO VOUT ON PCB
SEE THE APPLICATIONS INFORMATION SECTION

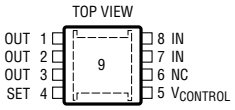

MS8E PACKAGE
8-LEAD PLASTIC MSOP

T_{JMAX} = 125°C, θ_{JA} = 60°C/W, θ_{JC} = 10°C/W
EXPOSED PAD (PIN 9) IS OUT, MUST BE SOLDERED TO VOUT ON PCB
SEE THE APPLICATIONS INFORMATION SECTION

ORDER INFORMATION

LEAD FREE FINISH	TAPE AND REEL	PART MARKING*	PACKAGE DESCRIPTION	TEMPERATURE RANGE
LT3085EDCB#PBF	LT3085EDCB#TRPBF	LDQQ	6-Lead (2mm × 3mm) Plastic DFN	–40°C to 125°C
LT3085EMS8E#PBF	LT3085EMS8E#TRPBF	LTDQP	8-Lead Plastic MSOP	–40°C to 125°C
LT3085IDCB#PBF	LT3085IDCB#TRPBF	LDQQ	6-Lead (2mm × 3mm) Plastic DFN	–40°C to 125°C
LT3085IMS8E#PBF	LT3085IMS8E#TRPBF	LTDQP	8-Lead Plastic MSOP	–40°C to 125°C
LT3085MPMS8E#PBF	LT3085MPMS8E#TRPBF	LTDWQ	8-Lead Plastic MSOP	–55°C to 125°C
LEAD BASED FINISH	**TAPE AND REEL**	**PART MARKING***	**PACKAGE DESCRIPTION**	**TEMPERATURE RANGE**
LT3085EDCB	LT3085EDCB#TR	LDQQ	6-Lead (2mm × 3mm) Plastic DFN	–40°C to 125°C
LT3085EMS8E	LT3085EMS8E#TR	LTDQP	8-Lead Plastic MSOP	–40°C to 125°C
LT3085IDCB	LT3085IDCB#TR	LDQQ	6-Lead (2mm × 3mm) Plastic DFN	–40°C to 125°C
LT3085IMS8E	LT3085IMS8E#TR	LTDQP	8-Lead Plastic MSOP	–40°C to 125°C
LT3085MPMS8E	LT3085MPMS8E#TR	LTDWQ	8-Lead Plastic MSOP	–55°C to 125°C

AUTOMOTIVE PRODUCTS**

LEAD FREE FINISH	TAPE AND REEL	PART MARKING*	PACKAGE DESCRIPTION	TEMPERATURE RANGE
LT3085EMS8E#WPBF	LT3085EMS8E#WTRPBF	LTDQP	8-Lead Plastic MSOP	–40°C to 125°C
LT3085IMS8E#WPBF	LT3085IMS8E#WTRPBF	LTDQP	8-Lead Plastic MSOP	–40°C to 125°C

Contact the factory for parts specified with wider operating temperature ranges. *The temperature grade is identified by a label on the shipping container.

Tape and reel specifications. Some packages are available in 500 unit reels through designated sales channels with #TRMPBF suffix.

**Versions of this part are available with controlled manufacturing to support the quality and reliability requirements of automotive applications. These models are designated with a #W suffix. Only the automotive grade products shown are available for use in automotive applications. Contact your local Analog Devices account representative for specific product ordering information and to obtain the specific Automotive Reliability reports for these models.

ELECTRICAL CHARACTERISTICS

The ● denotes the specifications which apply over the full operating temperature range, otherwise specifications are at T_A = 25°C (Note 2).

PARAMETER		CONDITIONS		MIN	TYP	MAX	UNITS
SET Pin Current	I_{SET}	V_{IN} = 1V, $V_{CONTROL}$ = 2V, I_{LOAD} = 1mA, T_J = 25°C		9.9	10	10.1	µA
		V_{IN} ≥ 1V, $V_{CONTROL}$ ≥ 2V, 1mA ≤ I_{LOAD} ≤ 500mA (Note 9)	●	9.8	10	10.2	µA
Output Offset Voltage (V_{OUT} – V_{SET})	V_{OS}	V_{IN} = 1V, $V_{CONTROL}$ = 2V, I_{LOAD} = 1mA, T_J = 25°C		–1.5		1.5	mV
		V_{IN} ≥ 1V, $V_{CONTROL}$ ≥ 2V, 1mA ≤ I_{LOAD} ≤ 500mA (Note 9)	●	–3		3	mV
Load Regulation	ΔI_{SET}	ΔI_{LOAD} = 1mA to 500mA			–0.1		nA
	ΔV_{OS}	ΔI_{LOAD} = 1mA to 500mA (Note 8)	●		–0.6	–1	mV
Line Regulation	ΔI_{SET}	ΔV_{IN} = 1V to 36V, $\Delta V_{CONTROL}$ = 2V to 36V, I_{LOAD} = 1mA			0.1	0.5	nA/V
	ΔV_{OS}	ΔV_{IN} = 1V to 36V, $\Delta V_{CONTROL}$ = 2V to 36V, I_{LOAD} = 1mA			0.003		mV/V
Minimum Load Current (Notes 3, 9)		V_{IN} = $V_{CONTROL}$ = 10V	●		300	500	µA
		V_{IN} = $V_{CONTROL}$ = 36V	●			1	mA
$V_{CONTROL}$ Dropout Voltage (Note 4)		I_{LOAD} = 100mA			1.2		V
		I_{LOAD} = 500mA	●		1.35	1.6	V
V_{IN} Dropout Voltage (Note 4)		I_{LOAD} = 100mA	●		85	150	mV
		I_{LOAD} = 500mA	●		275	450	mV
$V_{CONTROL}$ Pin Current (Note 5)		I_{LOAD} = 100mA	●		3	6	mA
		I_{LOAD} = 500mA	●		8	15	mA
Current Limit (Note 9)		V_{IN} = 5V, $V_{CONTROL}$ = 5V, V_{SET} = 0V, V_{OUT} = –0.1V	●	500	650		mA
Error Amplifier RMS Output Noise (Note 6)		I_{LOAD} = 500mA, 10Hz ≤ f ≤ 100kHz, C_{OUT} = 10µF, C_{SET} = 0.1µF			33		μV_{RMS}
Reference Current RMS Output Noise (Note 6)		10Hz ≤ f≤ 100kHz			0.7		nA_{RMS}
Ripple Rejection		f = 120Hz, V_{RIPPLE} = 0.5V_{P-P}, I_{LOAD} = 0.1A, C_{SET} = 0.1µF, C_{OUT} = 2.2µF			90		dB
		f=10kHz			75		dB
		f=1MHz			20		dB
Thermal Regulation, I_{SET}		10ms Pulse			0.003		%/W

Note 1: Stresses beyond those listed under Absolute Maximum Ratings may cause permanent damage to the device. Exposure to any Absolute Maximum Rating condition for extended periods may affect device reliability and lifetime.

Note 2. Unless otherwise specified, all voltages are with respect to V_{OUT}. The LT3085 is tested and specified under pulse load conditions such that $T_J \cong T_A$. The LT3085E is 100% tested at T_A = 25°C. Performance of the LT3085E over the full –40°C to 125°C operating junction temperature range is assured by design, characterization, and correlation with statistical process controls. The LT3085I regulators are guaranteed over the full –40°C to 125°C operating junction temperature range. The LT3085 (MP grade) is 100% tested and guaranteed over the –55°C to 125°C operating junction temperature range.

Note 3. Minimum load current is equivalent to the quiescent current of the part. Since all quiescent and drive current is delivered to the output of the part, the minimum load current is the minimum current required to maintain regulation.

Note 4. For the LT3085, dropout is caused by either minimum control voltage ($V_{CONTROL}$) or minimum input voltage (V_{IN}). Both parameters are specified with respect to the output voltage. The specifications represent the minimum input-to-output differential voltage required to maintain regulation.

Note 5. The $V_{CONTROL}$ pin current is the drive current required for the output transistor. This current will track output current with roughly a 1:60 ratio. The minimum value is equal to the quiescent current of the device.

Note 6. Output noise is lowered by adding a small capacitor across the voltage setting resistor. Adding this capacitor bypasses the voltage setting resistor shot noise and reference current noise; output noise is then equal to error amplifier noise (see Applications Information section).

Note 7. The SET pin is clamped to the output with diodes through 1k resistors. These resistors and diodes will only carry current under transient overloads.

Note 8. Load regulation is Kelvin sensed at the package.

Note 9. Current limit includes foldback protection circuitry. Current limit decreases at higher input-to-output differential voltages. See the Typical Performance Characteristics graphs for more information.

Note 10. This IC includes over-temperature protection that is intended to protect the device during momentary overload conditions. Junction temperature will exceed the maximum operating junction temperature when over-temperature protection is active. Continuous operation above the specified maximum operating junction temperature may impair device reliability.

TYPICAL PERFORMANCE CHARACTERISTICS

Set Pin Current

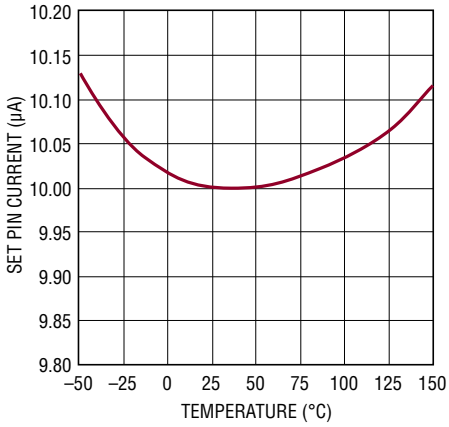

Set Pin Current Distribution

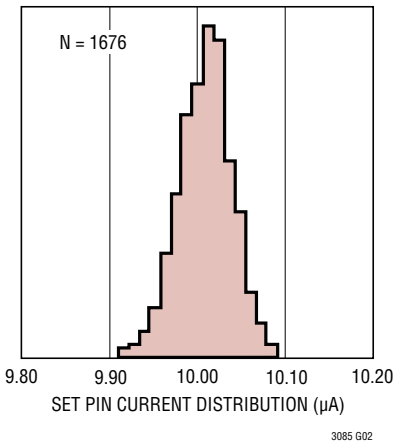

Offset Voltage ($V_{OUT} – V_{SET}$)

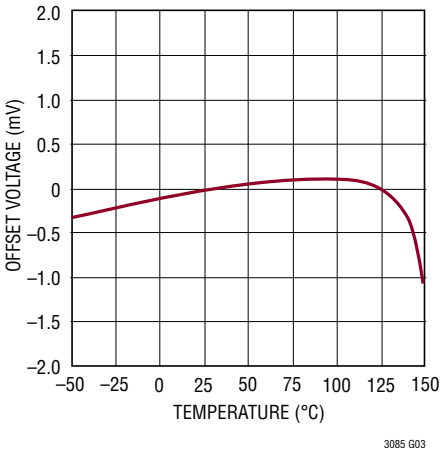

Offset Voltage Distribution

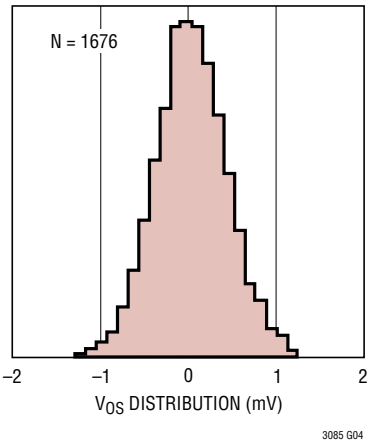

Offset Voltage

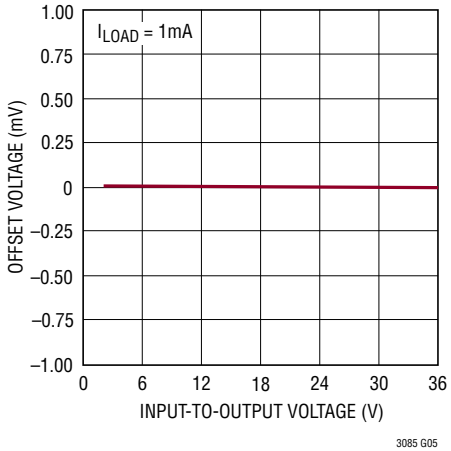

Offset Voltage

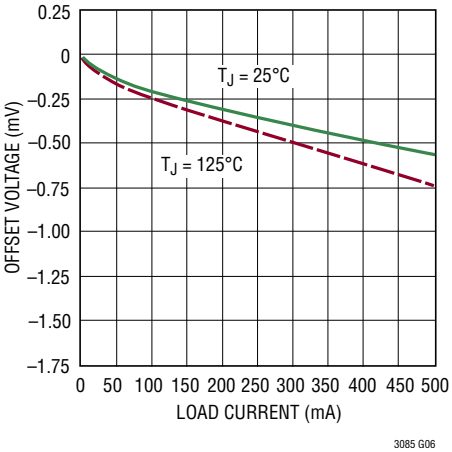

Load Regulation

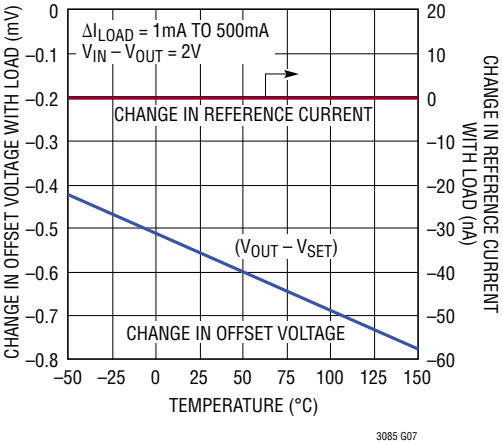

Minimum Load Current

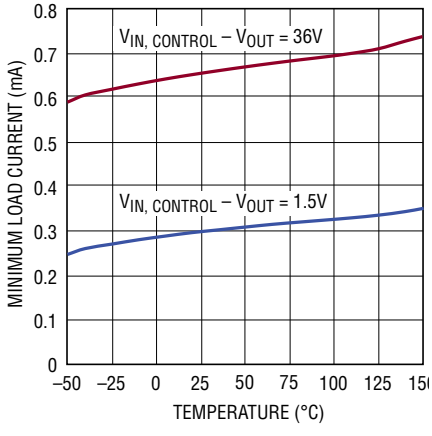

Dropout Voltage (Minimum IN Voltage)

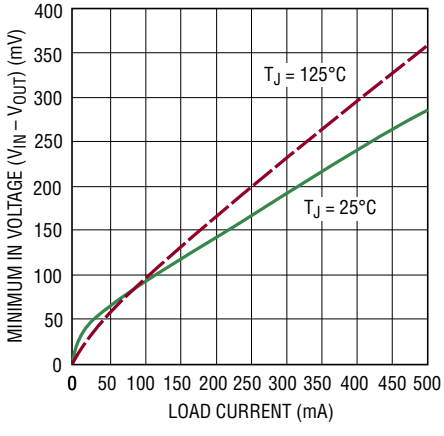

Rev. C

TYPICAL PERFORMANCE CHARACTERISTICS

Dropout Voltage (Minimum IN Voltage)

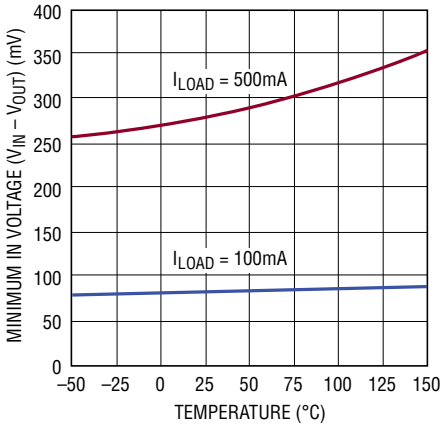

Dropout Voltage (Minimum VCONTROL Pin Voltage)

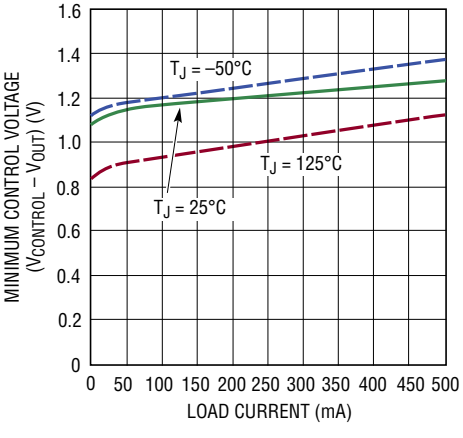

Dropout Voltage (Minimum VCONTROL Pin Voltage)

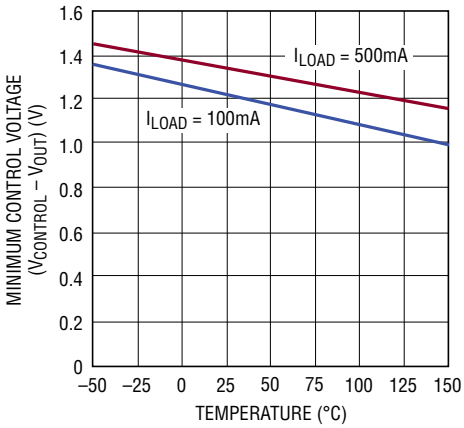

Current Limit

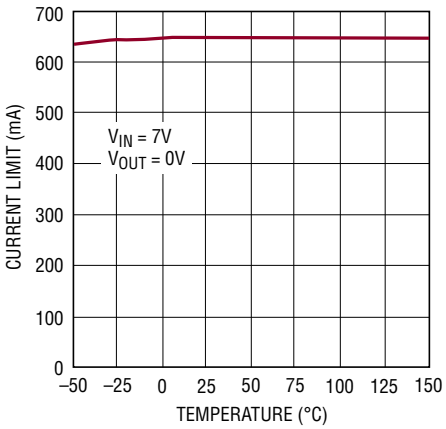

Current Limit

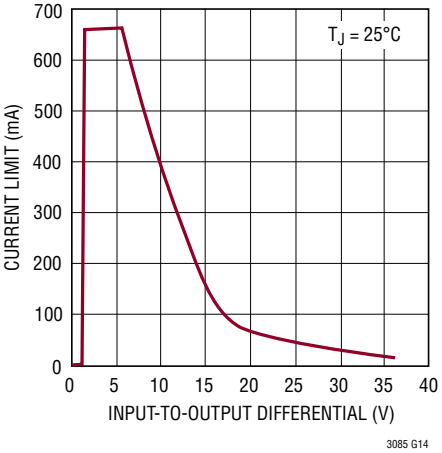

Load Transient Response

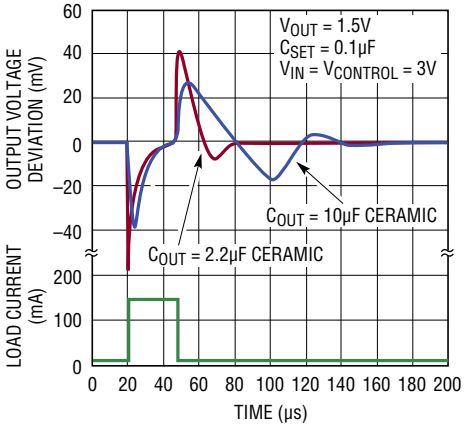

Load Transient Response

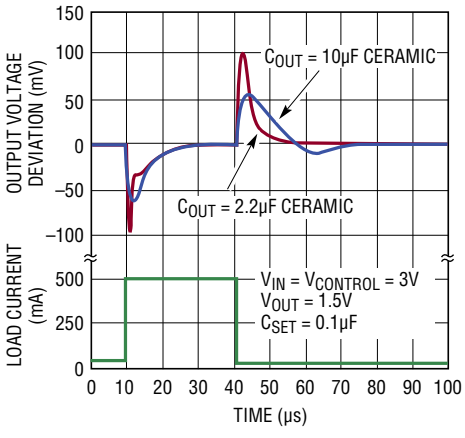

Line Transient Response

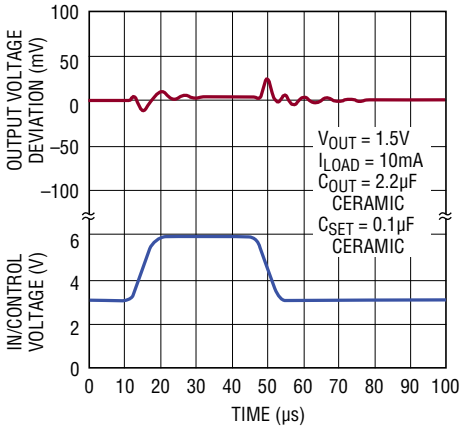

Turn-On Response

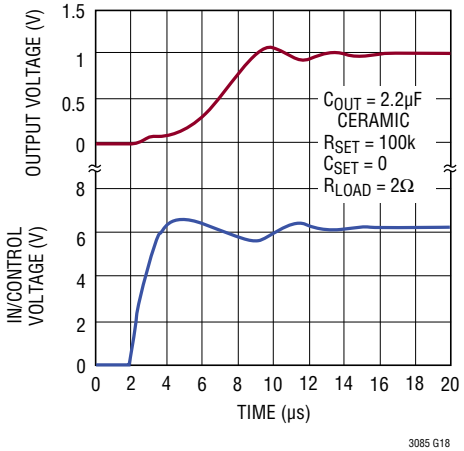

TYPICAL PERFORMANCE CHARACTERISTICS

$V_{CONTROL}$ Pin Current

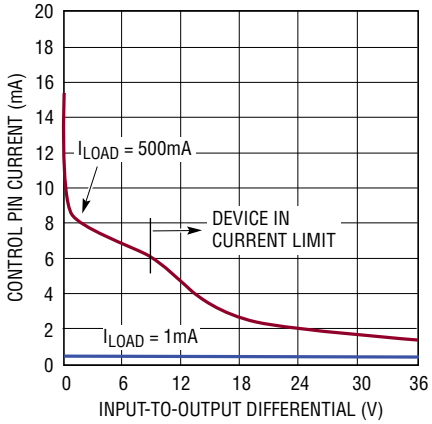

$V_{CONTROL}$ Pin Current

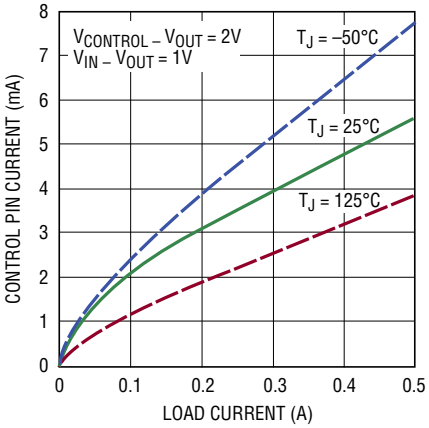

Residual Output Voltage with Less Than Minimum Load

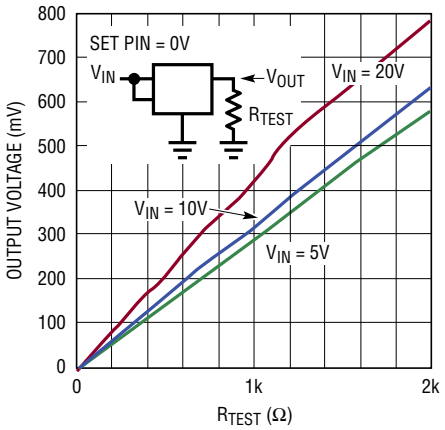

Ripple Rejection – Single Supply

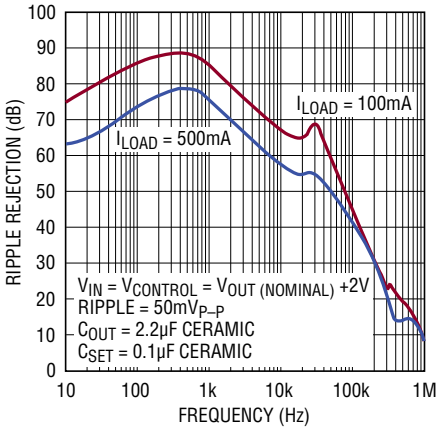

Ripple Rejection – Dual Supply – $V_{CONTROL}$ Pin

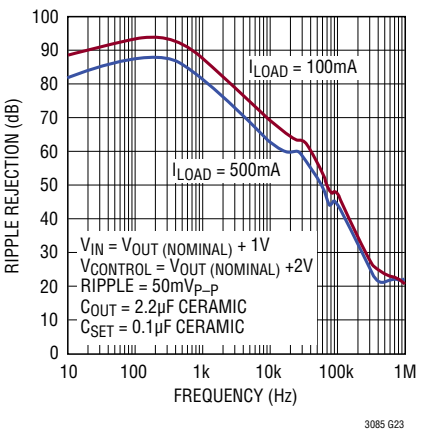

Ripple Rejection – Dual Supply – IN Pin

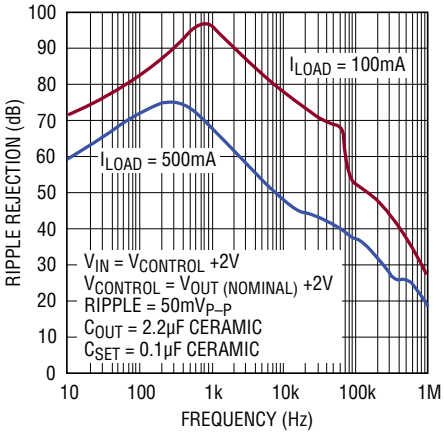

Ripple Rejection (120Hz)

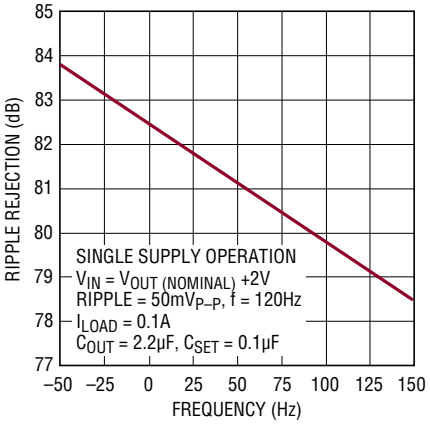

Noise Spectral Density

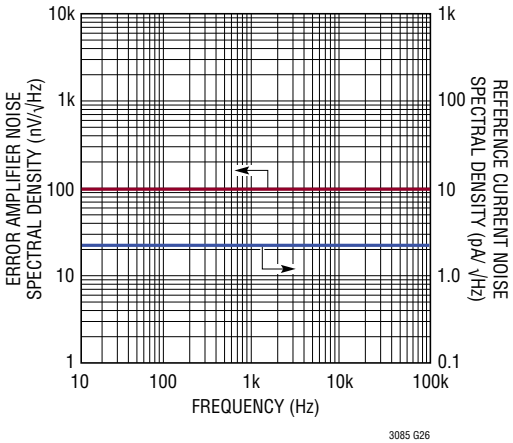

Output Voltage Noise

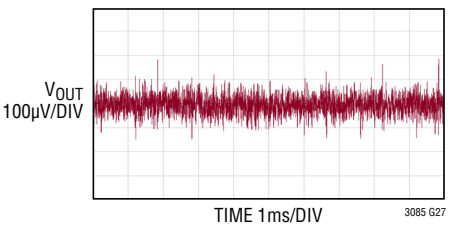

VOUT = 1V
RSET = 100k
CSET = 0.1µF
COUT = 10µF
ILOAD = 0.5A

TYPICAL PERFORMANCE CHARACTERISTICS

Error Amplifier Gain and Phase

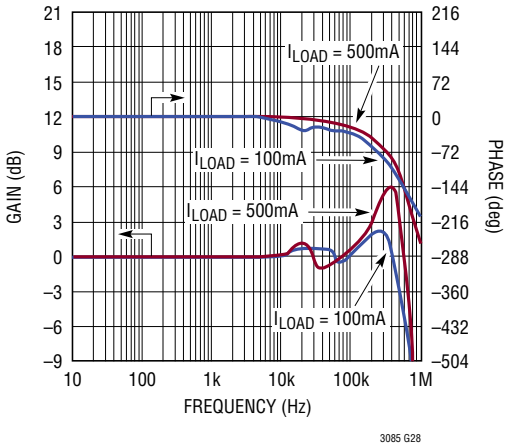

Ripple Rejection – SET Pin Current

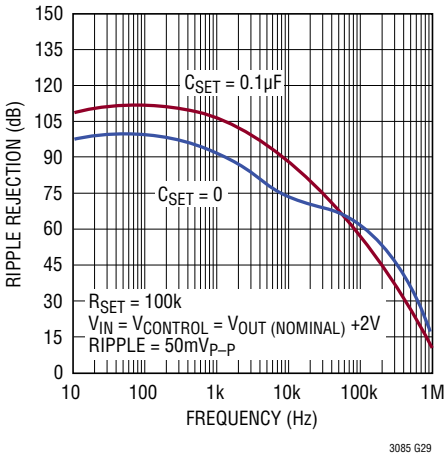

PIN FUNCTIONS (DCB/MS8E)

$V_{CONTROL}$ (Pin 4/Pin 5): This pin is the supply pin for the control circuitry of the device. The current flow into this pin is about 1.7% of the output current. For the device to regulate, this voltage must be more than 1.2V to 1.35V greater than the output voltage (see $V_{CONTROL}$ Dropout Voltage in the Electrical Characteristics table and graphs in the Typical Performance Characteristics). The LT3085 requires a bypass capacitor at $V_{CONTROL}$ if more than six inches away from the main input filter capacitor. The output impedance of a battery rises with frequency, so include a bypass capacitor in battery-powered circuits. A bypass capacitor in the range of 1µF to 10µF suffices.

IN (Pins 5, 6/Pins 7, 8): This is the collector to the power device of the LT3085. The output load current is supplied through this pin. For the device to regulate, the voltage at this pin must be more than 0.1V to 0.5V greater than the output voltage (see V_{IN} Dropout Voltage in the Electrical Characteristics table and graphs in the Typical Performance Characteristics). The LT3085 requires a bypass capacitor at IN if more than six inches away from the main input filter capacitor. The output impedance of a battery rises with frequency, so include a bypass capacitor in battery-powered circuits. A bypass capacitor in the range of 1µF to 10µF suffices.

NC (NA/Pin 6): No Connection. The No Connect pin has no connection to internal circuitry and may be tied to V_{IN}, $V_{CONTROL}$, V_{OUT}, GND, or floated.

OUT (Pins 1, 2/Pins 1, 2, 3): This is the power output of the device. There must be a minimum load current of 1mA or the output may not regulate. A minimum 2.2µF output capacitor is required for stability.

SET (Pin 3/Pin 4): This pin is the non-inverting input to the error amplifier and the regulation set point for the device. A fixed current of 10µA flows out of this pin through a single external resistor, which programs the output voltage of the device. Output voltage range is zero to the absolute maximum rated output voltage. Transient performance can be improved and output noise can be decreased by adding a small capacitor from the SET pin to ground.

Exposed Pad (Pin 7/Pin 9): OUT. Tie directly to Pins 1, 2/Pins 1, 2, 3 directly at the PCB.

BLOCK DIAGRAM

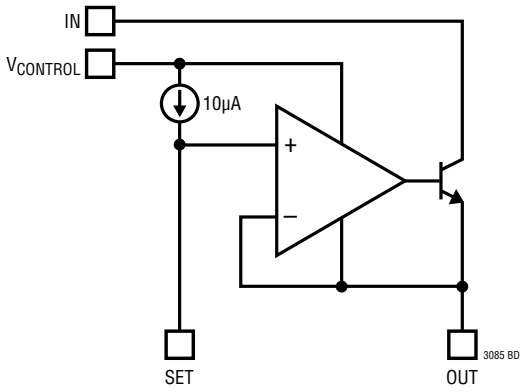

APPLICATIONS INFORMATION

The LT3085 regulator is easy to use and has all the protection features expected in high performance regulators. Included are short-circuit protection and safe operating area protection, as well as thermal shutdown.

The LT3085 is especially well suited to applications needing multiple rails. The new architecture adjusts down to zero with a single resistor, handling modern low voltage digital ICs as well as allowing easy parallel operation and thermal management without heat sinks. Adjusting to "zero" output allows shutting off the powered circuitry and when the input is pre-regulated – such as a 5V or 3.3V input supply – external resistors can help spread the heat.

A precision "0" TC 10µA internal current source is connected to the non-inverting input of a power operational amplifier. The power operational amplifier provides a low impedance buffered output to the voltage on the non-inverting input. A single resistor from the non-inverting input to ground sets the output voltage and if this resistor is set to zero, zero output results. As can be seen, any output voltage can be obtained from zero up to the maximum defined by the input power supply.

What is not so obvious from this architecture are the benefits of using a true internal current source as the reference as opposed to a bootstrapped reference in older regulators. A true current source allows the regulator to have gain and frequency response independent of the impedance on the positive input. Older adjustable regulators, such as the LT1086, have a change in loop gain with output voltage as well as bandwidth changes when the adjustment pin is bypassed to ground. For the LT3085, the loop gain is unchanged by changing the output voltage or bypassing. Output regulation is not fixed at a percentage of the output voltage but is a fixed fraction of millivolts. Use of a true current source allows all the gain in the buffer amplifier to provide regulation and none of that gain is needed to amplify up the reference to a higher output voltage.

The LT3085 has the collector of the output transistor connected to a separate pin from the control input. Since the dropout on the collector (IN pin) is only 275mV, two supplies can be used to power the LT3085 to reduce dissipation: a higher voltage supply for the control circuitry and a lower voltage supply for the collector. This increases efficiency and reduces dissipation. To further spread the heat, a resistor can be inserted in series with the collector to move some of the heat out of the IC and spread it on the PC board.

APPLICATIONS INFORMATION

The LT3085 can be operated in two modes. Three terminal mode has the control pin connected to the power input pin which gives a limitation of 1.35V dropout. Alternatively, the "control" pin can be tied to a higher voltage and the power IN pin to a lower voltage giving 275mV dropout on the IN pin and minimizing the power dissipation. This allows for a 500mA supply regulating from $2.5V_{IN}$ to $1.8V_{OUT}$ or $1.8V_{IN}$ to $1.2V_{OUT}$ with low dissipation.

Setting Output Voltage

The LT3085 generates a 10µA reference current that flows out of the SET pin. Connecting a resistor from SET to ground generates a voltage that becomes the reference point for the error amplifier (see Figure 1). The reference voltage is a straight multiplication of the SET pin current and the value of the resistor. Any voltage can be generated and there is no minimum output voltage for the regulator. Table 1 lists many common output voltages and standard 1% resistor values used to generate that output voltage. A minimum load current of 1mA is required to maintain regulation regardless of output voltage. For true zero voltage output operation, this 1mA load current must be returned to a negative supply voltage.

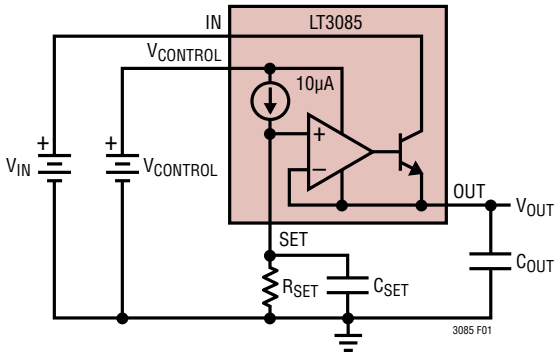

$V_{OUT} = R_{SET} \bullet 10\mu A$

Figure 1. Basic Adjustable Regulator

With the low level current used to generate the reference voltage, leakage paths to or from the SET pin can create errors in the reference and output voltages. High quality insulation should be used (e.g., Teflon, Kel-F); cleaning of all insulating surfaces to remove fluxes and other residues will probably be required. Surface coating may be necessary to provide a moisture barrier in high humidity environments.

Table 1. 1% Resistors for Common Output Voltages

V_{OUT}	R_{SET}
1V	100k
1.2V	121k
1.5V	150k
1.8V	182k
2.5V	249k
3.3V	332k
5V	499k

Board leakage can be minimized by encircling the SET pin and circuitry with a guardring operated at a potential close to itself; the guardring should be tied to the OUT pin. Guarding both sides of the circuit board is required. Bulk leakage reduction depends on the guard ring width. Ten nanoamperes of leakage into or out of the SET pin and associated circuitry creates a 0.1% error in the reference voltage. Leakages of this magnitude, coupled with other sources of leakage, can cause significant offset voltage and reference drift, especially over a wide temperature range.

If guardring techniques are used, this bootstraps any stray capacitance at the SET pin. Since the SET pin is a high impedance node, unwanted signals may couple into the SET pin and cause erratic behavior. This will be most noticeable when operating with minimum output capacitors at full load current. The easiest way to remedy this is to bypass the SET pin with a small amount of capacitance from SET to ground, 10pF to 20pF is sufficient.

APPLICATIONS INFORMATION

Input Capacitance and Stability

The LT3085 is designed to be stable with a minimum capacitance of 1µF at each input pin. Ceramic capacitors with low ESR are available for use to bypass these pins, but in cases where long wires connect the LT3085 inputs to a power supply (and also from ground of the LT3085 circuitry back to power supply ground), this causes instabilities. This happens due to the wire inductance forming an LC tank circuit with the input capacitor and not as a result of instability on the LT3085.

The self-inductance, or isolated inductance, of a wire is directly proportional to its length. The diameter does not have a major influence on its self-inductance. As an example, the self-inductance of a 2-AWG isolated wire with a diameter of 0.26in. is approximately half the self-inductance of a 30-AWG wire with a diameter of 0.01in. One foot of 30-AWG wire has 465nH of self-inductance.

The overall self-inductance of a wire is reduced in one of two ways. One is to divide the current flowing towards the LT3085 between two parallel conductors. In this case, the farther apart the wires are from each other, the more the self-inductance is reduced, up to a 50% reduction when placed a few inches apart. Splitting the wires basically connects two equal inductors in parallel, but placing them in close proximity gives the wires mutual inductance adding to the self-inductance. The second and most effective way to reduce overall inductance is to place both forward- and return-current conductors (the wire for the input and the wire for ground) in very close proximity. Two 30-AWG wires separated by only 0.02in. used as forward- and return-current conductors reduce the overall self-inductance to approximately one-fifth that of a single isolated wire.

If the LT3085 is powered by a battery mounted in close proximity on the same circuit board, a 2.2µF input capacitor is sufficient for stability. When powering from distant supplies, use a larger input capacitor based on a guideline of 1µF plus another 1µF per 8 inches of wire length.

As power supply impedance does vary, the amount of capacitance needed to stabilize your application will also vary. Extra capacitance placed directly on the output of the power supply requires an order of magnitude more capacitance as opposed to placing extra capacitance close to the LT3085.

Using series resistance between the power supply and the input of the LT3085 also stabilizes the application. As little as 0.1Ω to 0.5Ω, often less, is all that is needed to provide damping in the circuit. If the extra impedance between the power supply and the input is unacceptable, placing the resistors in series with the capacitors will provide damping to prevent the LC resonance from causing full-blown oscillation.

Stability and Output Capacitance

The LT3085 requires an output capacitor for stability. It is designed to be stable with most low ESR capacitors (typically ceramic, tantalum or low ESR electrolytic). A minimum output capacitor of 2.2µF with an ESR of 0.5Ω or less is recommended to prevent oscillations. Larger values of output capacitance decrease peak deviations and provide improved transient response for larger load current changes. Bypass capacitors, used to decouple individual components powered by the LT3085, increase the effective output capacitor value.

For improvement in transient performance, place a capacitor across the voltage setting resistor. Capacitors up to 1µF can be used. This bypass capacitor reduces system noise as well, but start-up time is proportional to the time constant of the voltage setting resistor (R_{SET} in Figure 1) and SET pin bypass capacitor.

Extra consideration must be given to the use of ceramic capacitors. Ceramic capacitors are manufactured with a variety of dielectrics, each with different behavior across temperature and applied voltage. The most common dielectrics used are specified with EIA temperature characteristic codes of Z5U, Y5V, X5R and X7R. The Z5U and Y5V dielectrics are good for providing high

APPLICATIONS INFORMATION

capacitances in a small package, but they tend to have strong voltage and temperature coefficients as shown in Figure 2 and Figure 3. When used with a 5V regulator, a 16V 10µF Y5V capacitor can exhibit an effective value as low as 1µF to 2µF for the DC bias voltage applied and over the operating temperature range. The X5R and X7R dielectrics result in more stable characteristics and are more suitable for use as the output capacitor. The X7R type has better stability across temperature, while the X5R is less expensive and is available in higher values. Care still must be exercised when using X5R and X7R capacitors; the X5R and X7R codes only specify operating temperature range and maximum capacitance change over temperature. Capacitance change due to DC bias with X5R and X7R capacitors is better than Y5V and Z5U capacitors, but can still be significant enough to drop capacitor values below appropriate levels. Capacitor DC bias characteristics tend to improve as component case size increases, but expected capacitance at operating voltage should be verified.

Voltage and temperature coefficients are not the only sources of problems. Some ceramic capacitors have a piezoelectric response. A piezoelectric device generates voltage across its terminals due to mechanical stress, ceramic capacitor the stress can be induced by vibrations in the system or thermal transients.

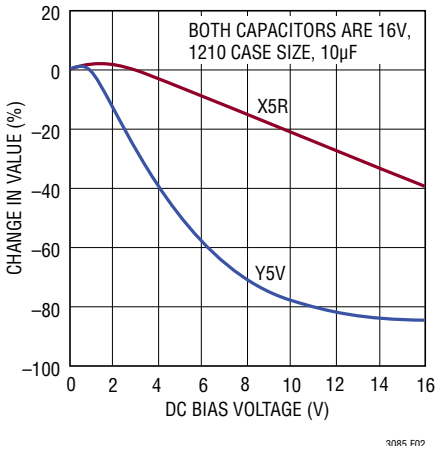

Figure 2. Ceramic Capacitor DC Bias Characteristics

Paralleling Devices

LT3085's may be paralleled with other LT308X devices to obtain higher output current. The SET pins are tied together and the IN pins are tied together. This is the same whether it's in three terminal mode or has separate input supplies. The outputs are connected in common using a small piece of PC trace as a ballast resistor to equalize the currents. PC trace resistance in milliohms/inch is shown in Table 2. Only a tiny area is needed for ballasting.

Table 2. PC Board Trace Resistance

WEIGHT (oz)	10 mil WIDTH	20 mil WIDTH
1	54.3	27.1
2	27.1	13.6

Trace resistance is measured in mΩ/in

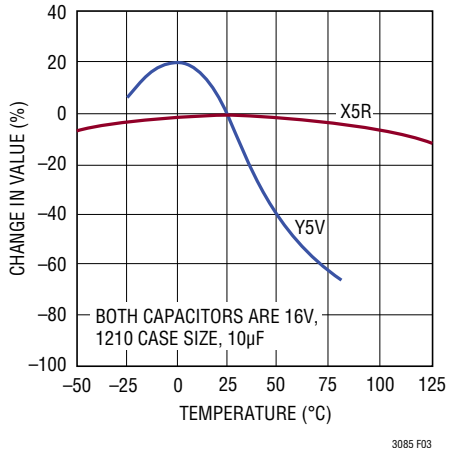

Figure 3. Ceramic Capacitor Temperature Characteristics

APPLICATIONS INFORMATION

The worst-case offset between the SET pin and the output of only ±1.5mV allows very small ballast resistors to be used. As shown in Figure 4, the two devices have a small 10mΩ and 20mΩ ballast resistors, which at full output current gives better than 80% equalized sharing of the current. The external resistance of 20mΩ (6.6mΩ for the two devices in parallel) only adds about 10mV of output regulation drop at an output of 1.5A. Even with an output voltage as low as 1V, this only adds 1% to the regulation. Of course, more than two LT308X's can be paralleled for even higher output current. They are spread out on the PC board, spreading the heat. Input resistors can further spread the heat if the input-to-output difference is high.

Thermal Performance

In this example, two LT3085 2mm × 3mm DFN devices are mounted on a 1oz copper 4-layer PC board. They are placed approximately 1.5 inches apart and the board is mounted vertically for convection cooling. Two tests were set up to measure the cooling performance and current sharing of these devices.

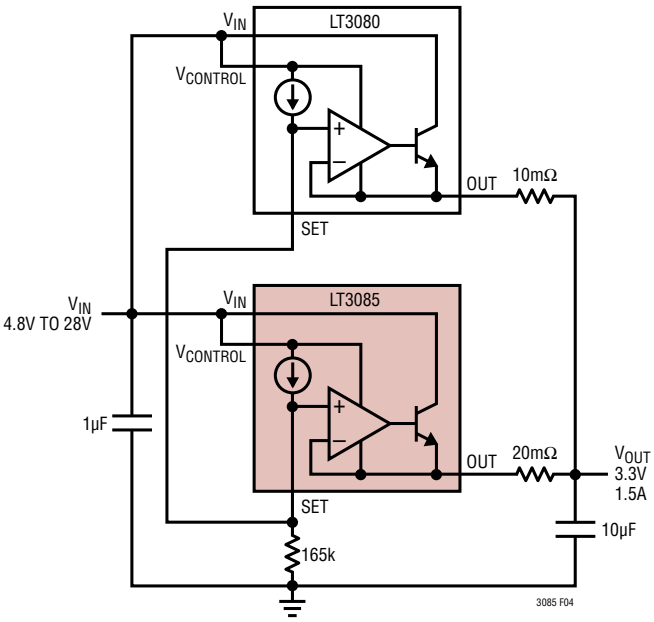

Figure 4. Parallel Devices

The first test was done with approximately 1.6V input- to-output and 0.5A per device. This gave a 800mW dissipation in each device and a 1A output current. The temperature rise above ambient is approximately 28°C and both devices were within plus or minus 1°C. Both the thermal and electrical sharing of these devices is excellent. The thermograph in Figure 5 shows the temperature distribution between these devices and the PC board reaches ambient temperature within about a half an inch from the devices.

The power is then increased with 3.4V across each device. This gives 1.7 watts dissipation in each device and a device temperature of about 90°C, about 65°C above ambient as shown in Figure 6. Again, the temperature

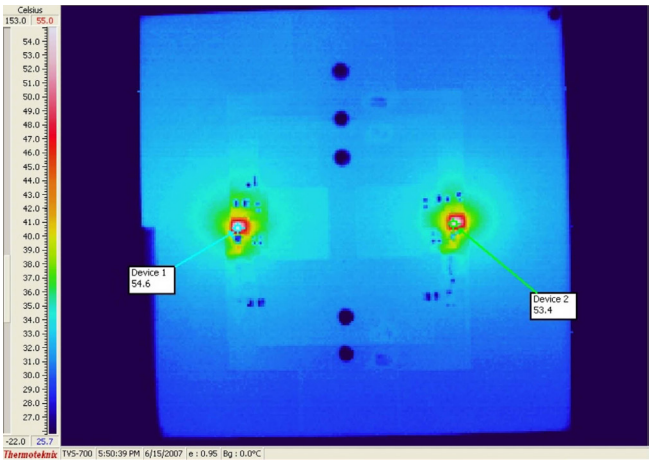

Figure 6. Temperature Rise at 800mW Dissipation

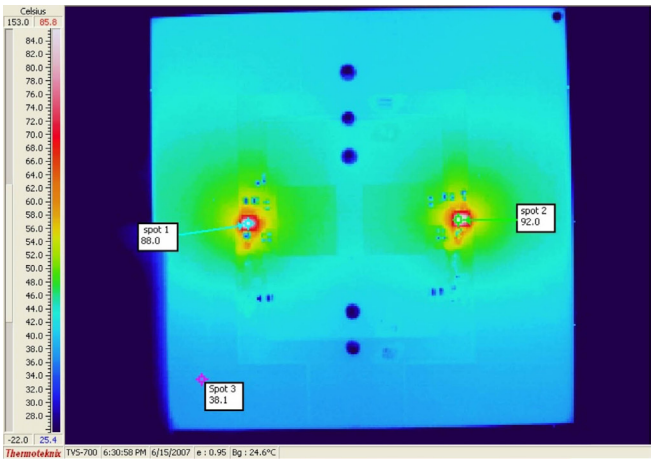

Figure 5. Temperature Rise at 1.7W Dissipation

APPLICATIONS INFORMATION

matching between the devices is within 2°C, showing excellent tracking between the devices. The board temperature has reached approximately 40°C within about 0.75 inches of each device.

While 90°C is an acceptable operating temperature for these devices, this is in 25°C ambient. For higher ambients, the temperature must be controlled to prevent device temperature from exceeding 125°C. A 3-meter-per-second airflow across the devices will decrease the device temperature about 20°C providing a margin for higher operating ambient temperatures.

Both at low power and relatively high power levels devices can be paralleled for higher output current. Current sharing and thermal sharing is excellent, showing that acceptable operation can be had while keeping the peak temperatures below excessive operating temperatures on a board. This technique allows higher operating current linear regulation to be used in systems where it could never be used before.

Quieting the Noise

The LT3085 offers numerous advantages when it comes to dealing with noise. There are several sources of noise in a linear regulator. The most critical noise source for any LDO is the reference; from there, the noise contribution from the error amplifier must be considered, and the gain created by using a resistor divider cannot be forgotten.

Traditional low noise regulators bring the voltage reference out to an external pin (usually through a large value resistor) to allow for bypassing and noise reduction of reference noise. The LT3085 does not use a traditional voltage reference like other linear regulators, but instead uses a reference current. That current operates with typical noise current levels of $2.3pA/\sqrt{Hz}$ ($0.7nA_{RMS}$ over the 10Hz to 100kHz bandwidth). The voltage noise of this is equal to the noise current multiplied by the resistor value. The resistor generates spot noise equal to $\sqrt{4kTR}$ (k = Boltzmann's constant, $1.38 \bullet 10^{-23}$ J/°K, and T is absolute temperature) which is RMS summed with the reference current noise. To lower reference noise, the voltage setting resistor may be bypassed with a capacitor, though this causes start-up time to increase as a factor of the RC time constant.

The LT3085 uses a unity-gain follower from the SET pin to drive the output, and there is no requirement to use a resistor to set the output voltage. Use a high accuracy voltage reference placed at the SET pin to remove the errors in output voltage due to reference current tolerance and resistor tolerance. Active driving of the SET pin is acceptable; the limitations are the creativity and ingenuity of the circuit designer.

One problem that a normal linear regulator sees with reference voltage noise is that noise is gained up along with the output when using a resistor divider to operate at levels higher than the normal reference voltage. With the LT3085, the unity-gain follower presents no gain whatsoever from the SET pin to the output, so noise figures do not increase accordingly. Error amplifier noise is typically $100nV/\sqrt{Hz}$ ($33\mu V_{RMS}$ over the 10Hz to 100kHz bandwidth); this is another factor that is RMS summed in to give a final noise figure for the regulator.

Curves in the Typical Performance Characteristics show noise spectral density and peak-to-peak noise characteristics for both the reference current and error amplifier over the 10Hz to 100kHz bandwidth.

Overload Recovery

Like many IC power regulators, the LT3085 has safe operating area (SOA) protection. The SOA protection decreases current limit as the input-to-output voltage increases and keeps the power dissipation at safe levels for all values of input-to-output voltage. The LT3085 provides some output current at all values of input-to-output voltage up to the device breakdown. See the Current Limit curve in the Typical Performance Characteristics.

When power is first turned on, the input voltage rises and the output follows the input, allowing the regulator to start into very heavy loads. During start-up, as the input voltage is rising, the input-to-output voltage differential is small, allowing the regulator to supply large output currents. With a high input voltage, a problem can occur wherein removal of an output short will not allow the output voltage to recover. Other regulators, such as the LT1085 and LT1764A, also exhibit this phenomenon so it is not unique to the LT3085.

APPLICATIONS INFORMATION

The problem occurs with a heavy output load when the input voltage is high and the output voltage is low. Common situations are immediately after the removal of a short circuit. The load line for such a load may intersect the output current curve at two points. If this happens, there are two stable operating points for the regulator. With this double intersection, the input power supply may need to be cycled down to zero and brought up again to make the output recover.

Load Regulation

Because the LT3085 is a floating device (there is no ground pin on the part, all quiescent and drive current is delivered to the load), it is not possible to provide true remote load sensing. Load regulation will be limited by the resistance of the connections between the regulator and the load. The data sheet specification for load regulation is Kelvin sensed at the pins of the package. Negative side sensing is a true Kelvin connection, with the bottom of the voltage setting resistor returned to the negative side of the load (see Figure 7). Connected as shown, system load regulation will be the sum of the LT3085 load regulation and the parasitic line resistance multiplied by the output current. It is important to keep the positive connection between the regulator and load as short as possible and use large wire or PC board traces.

Internal Parasitic Diodes and Protection Diodes

In normal operation, the LT3085 does not require protection diodes. Older three-terminal regulators require protection diodes between the VOUT pin and the input pin or between the ADJ pin and the VOUT pin to prevent die overstress.

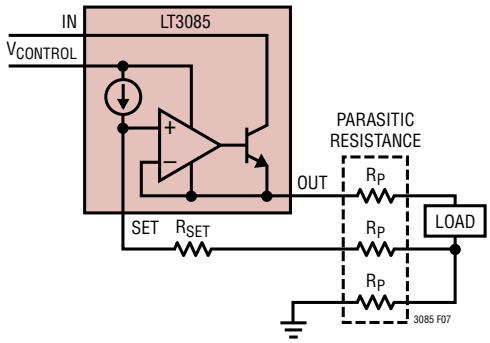

Figure 7. Connections for Best Load Regulation

On the LT3085, internal resistors and diodes limit current paths on the SET pin. Even with bypass capacitors on the SET pin, no protection diode is needed to ensure device safety under short-circuit conditions. The SET pin handles ±10V (either transient or DC) with respect to OUT without any device degradation.

Internal parasitic diodes exist between OUT and the two inputs. Negative input voltages are transferred to the output and may damage sensitive loads. Reverse-biasing either input to OUT will turn on these parasitic diodes and allow current flow. This current flow will bias internal nodes of the LT3085 to levels that possibly cause errors when suddenly returning to normal operating conditions and expecting the device to start and operate. Prediction of results of a bias fault is impossible, immediate return to normal operating conditions can be just as difficult after a bias fault. Suffice it to say that extra wait time, power cycling, or protection diodes may be needed to allow the LT3085 to return to a normal operating mode as quickly as possible.

Protection diodes are not otherwise needed between the OUT pin and IN pin. The internal diodes can handle microsecond surge currents of up to 50A. Even with large output capacitors, obtaining surge currents of those magnitudes is difficult in normal operation. Only with large output capacitors, such as 1000µF to 5000µF, and with IN instantaneously shorted to ground will damage occur. A crowbar circuit at IN is capable of generating those levels of currents, and then protection diodes from OUT to IN are recommended. Normal power supply cycling or system "hot plugging and unplugging" does not do any damage.

A protection diode between OUT and $V_{CONTROL}$ is usually not needed. The internal parasitic diode on $V_{CONTROL}$ of the LT3085 handles microsecond surge currents of 1A to 10A. Again, this only occurs when using crowbar circuits with large value output capacitors. Since the $V_{CONTROL}$ pin is usually a low current supply, this is unlikely. Still, a protection diode is recommended if $V_{CONTROL}$ can be instantaneously shorted to ground. Normal power supply cycling or system "hot plugging and unplugging" does not do any damage.

APPLICATIONS INFORMATION

If the LT3085 is configured as a three-terminal (single supply) regulator with IN and $V_{CONTROL}$ shorted together, the internal diode of the IN pin will protect the $V_{CONTROL}$ pin.

Like any other regulator, exceeding the maximum input-to-output differential causes internal transistors to break down and then none of the internal protection circuitry is functional.

Thermal Considerations

The LT3085 has internal power and thermal limiting circuitry designed to protect it under overload conditions. For continuous normal load conditions, maximum junction temperature must not be exceeded. It is important to give consideration to all sources of thermal resistance from junction to ambient. This includes junction-to-case, case-to-heat sink interface, heat sink resistance or circuit board-to-ambient as the application dictates. Additional heat sources nearby must also be considered.

For surface mount devices, heat sinking is accomplished by using the heat spreading capabilities of the PC board and its copper traces. Surface mount heat sinks and plated through-holes can also be used to spread the heat generated by power devices. Boards specified in thermal resistance tables have no vias on plated through-holes from topside to backside.

Junction-to-case thermal resistance is specified from the IC junction to the bottom of the case directly below the die. This is the lowest resistance path for heat flow. Proper mounting is required to ensure the best possible thermal flow from this area of the package to the heat sinking material. **Note that the Exposed Pad is electrically connected to the output.**

The following tables list thermal resistance for several different copper areas given a fixed board size. All measurements were taken in still air on two-sided 1/16" FR-4 board with one ounce copper.

PCB layers, copper weight, board layout and thermal vias affect the resultant thermal resistance. Although Tables 2 and 3 provide thermal resistance numbers for 2-layer board with 1 ounce copper, modern multi-layer PCBs provide better performance than found in these tables. For example, a 4-layer, 1 ounce copper PCB board with 5 thermal vias from the DFN or MSOP exposed backside pad to inner layers (connected to V_{OUT}) achieves 40°C/W thermal resistance. Demo circuit 1401A's board layout achieves this 40°C/W performance. This is approximately a 45% improvement over the numbers shown in Table 3 and Table 4.

Table 3. MSE Package, 8-Lead MSOP

COPPER AREA		BOARD AREA	THERMAL RESISTANCE (JUNCTION-TO-AMBIENT)
TOPSIDE*	BACKSIDE		
2500mm^2	2500mm^2	2500mm^2	55°C/W
1000mm^2	2500mm^2	2500mm^2	57°C/W
225mm^2	2500mm^2	2500mm^2	60°C/W
100mm^2	2500mm^2	2500mm^2	65°C/W

*Device is mounted on topside

Table 4. DCB Package, 6-Lead DFN

COPPER AREA		BOARD AREA	THERMAL RESISTANCE (JUNCTION-TO-AMBIENT)
TOPSIDE*	BACKSIDE		
2500mm^2	2500mm^2	2500mm^2	68°C/W
1000mm^2	2500mm^2	2500mm^2	70°C/W
225mm^2	2500mm^2	2500mm^2	73°C/W
100mm^2	2500mm^2	2500mm^2	78°C/W

*Device is mounted on topside

For future information on the thermal resistance and using thermal information, refer to JEDEC standard JESD51, notably JESD51-12.

Calculating Junction Temperature

Example: Given an output voltage of 0.9V, a $V_{CONTROL}$ voltage of 3.3V ±10%, an IN voltage of 1.5V ±5%, output current range from 1mA to 0.5A and a maximum ambient temperature of 50°C, what will the maximum junction temperature be for the DFN package on a 2500mm^2 board with topside copper area of 500mm^2?

The power in the drive circuit equals:

$$P_{DRIVE} = (V_{CONTROL} - V_{OUT})(I_{CONTROL})$$

where $I_{CONTROL}$ is equal to $I_{OUT}/60$. $I_{CONTROL}$ is a function of output current. A curve of $I_{CONTROL}$ vs I_{OUT} can be found in the Typical Performance Characteristics curves.

APPLICATIONS INFORMATION

The power in the output transistor equals:

$$P_{OUTPUT} = (V_{IN} - V_{OUT})(I_{OUT})$$

The total power equals:

$$P_{TOTAL} = P_{DRIVE} + P_{OUTPUT}$$

The current delivered to the SET pin is negligible and can be ignored.

$V_{CONTROL(MAX\ CONTINUOUS)}$ = 3.630V (3.3V + 10%)

$V_{IN(MAX\ CONTINUOUS)}$ = 1.575V (1.5V + 5%)

V_{OUT} = 0.9V, I_{OUT} = 0.5A, T_A = 50°C

Power dissipation under these conditions is equal to:

$$P_{DRIVE} = (V_{CONTROL} - V_{OUT})(I_{CONTROL})$$

$$I_{CONTROL} = \frac{I_{OUT}}{60} = \frac{0.5A}{60} = 8.3mA$$

$$P_{DRIVE} = (3.630V - 0.9V)(8.3mA) = 23mW$$

$$P_{OUTPUT} = (V_{IN} - V_{OUT})(I_{OUT})$$

$$P_{OUTPUT} = (1.575V - 0.9V)(0.5A) = 337mW$$

Total Power Dissipation = 360mW

Junction Temperature will be equal to:

$$T_J = T_A + P_{TOTAL} \bullet \theta_{JA} \text{ (approximated using tables)}$$

$$T_J = 50°C + 360mW \bullet 73°C/W = 76°C$$

In this case, the junction temperature is below the maximum rating, ensuring reliable operation.

Reducing Power Dissipation

In some applications it may be necessary to reduce the power dissipation in the LT3085 package without sacrificing output current capability. Two techniques are available. The first technique, illustrated in Figure 8, employs a resistor in series with the regulator's input. The voltage drop across R_S decreases the LT3085's IN-to-OUT differential voltage and correspondingly decreases the LT3085's power dissipation.

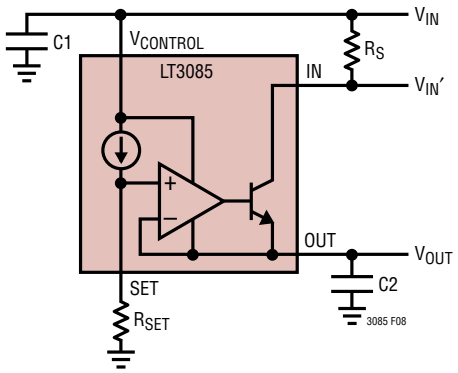

Figure 8. Reducing Power Dissipation Using a Series Resistor

As an example, assume: $V_{IN} = V_{CONTROL}$ = 5V, V_{OUT} = 3.3V and $I_{OUT(MAX)}$ = 0.5A. Use the formulas from the Calculating Junction Temperature section previously discussed.

APPLICATIONS INFORMATION

Without series resistor R_S, power dissipation in the LT3085 equals:

$$P_{TOTAL} = (5V - 3.3V) \bullet \left(\frac{0.5A}{60}\right) + (5V - 3.3V) \bullet 0.5A$$

$$= 0.86W$$

If the voltage differential (V_{DIFF}) across the NPN pass transistor is chosen as 0.5V, then R_S equals:

$$R_S = \frac{5V - 3.3V - 0.5V}{0.5A} = 2.4\Omega$$

Power dissipation in the LT3085 now equals:

$$P_{TOTAL} = (5V - 3.3V) \bullet \left(\frac{0.5A}{60}\right) + (0.5V) \bullet 0.5A = 0.26W$$

The LT3085's power dissipation is now only 30% compared to no series resistor. R_S dissipates 0.6W of power. Choose appropriate wattage resistors to handle and dissipate the power properly.

The second technique for reducing power dissipation, shown in Figure 9, uses a resistor in parallel with the LT3085. This resistor provides a parallel path for current flow, reducing the current flowing through the LT3085. This technique works well if input voltage is reasonably constant and output load current changes are small. This technique also increases the maximum available output current at the expense of minimum load requirements.

As an example, assume: $V_{IN} = V_{CONTROL} = 5V$, $V_{IN(MAX)} = 5.5V$, $V_{OUT} = 3.3V$, $V_{OUT(MIN)} = 3.2V$, $I_{OUT(MAX)} = 0.5A$ and $I_{OUT(MIN)} = 0.35A$. Also, assuming that R_P carries no more than 90% of $I_{OUT(MIN)} = 315mA$.

Calculating R_P yields:

$$R_P = \frac{5.5V - 3.2V}{315mA} = 7.30\Omega$$

(5% Standard value = 7.Ω)

The maximum total power dissipation is (5.5V – 3.2V) • 0.5A = 1.2W. However the LT3085 supplies only:

$$0.5A - \frac{5.5V - 3.2V}{7.5\Omega} = 0.193A$$

Therefore, the LT3085's power dissipation is only:

P_{DIS} = (5.5V – 3.2V) • 0.193A = 0.44W

R_P dissipates 0.71W of power. As with the first technique, choose appropriate wattage resistors to handle and dissipate the power properly. With this configuration, the LT3085 supplies only 0.36A. Therefore, load current can increase by 0.3A to 0.143A while keeping the LT3085 in its normal operating range.

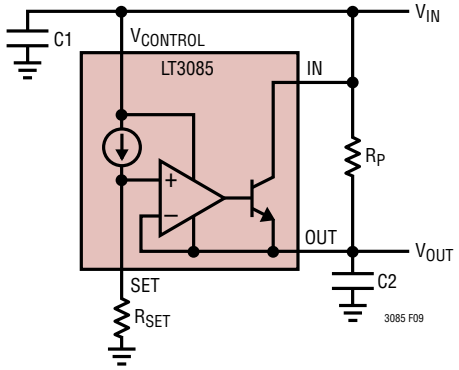

Figure 9. Reducing Power Dissipation Using a Parallel Resistor

TYPICAL APPLICATIONS

Higher Output Current

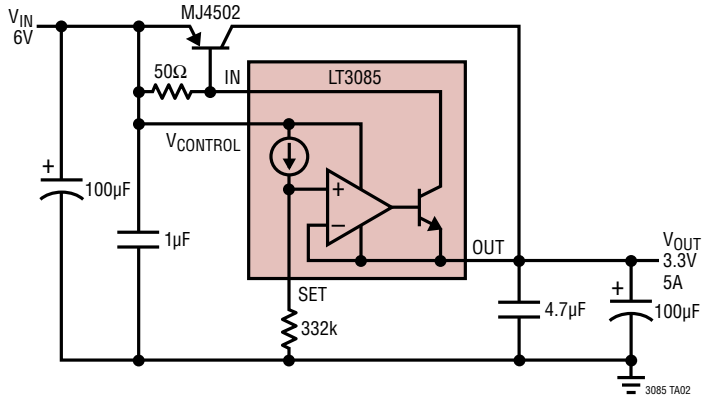

Current Source

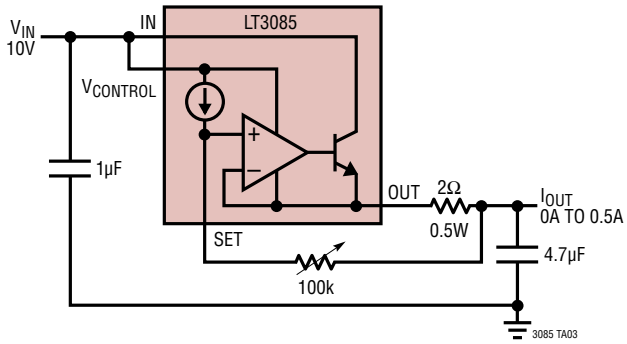

Power Oscillator

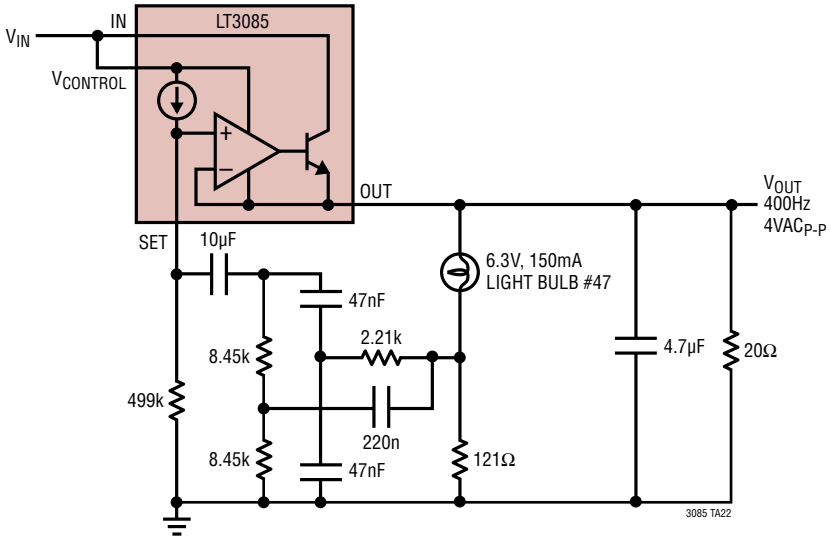

TYPICAL APPLICATIONS

Adding Shutdown

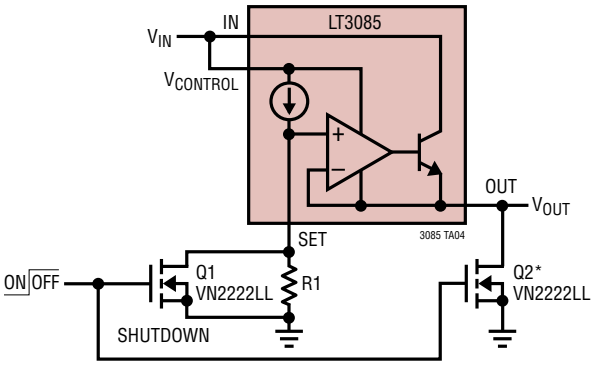

*Q2 INSURES ZERO OUTPUT IN THE ABSENCE OF ANY OUTPUT LOAD.

Low Dropout Voltage LED Driver

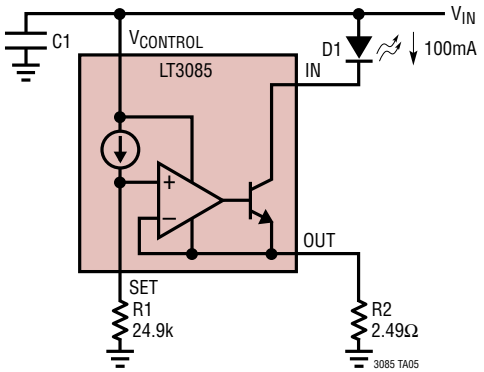

Using a Lower Value SET Resistor

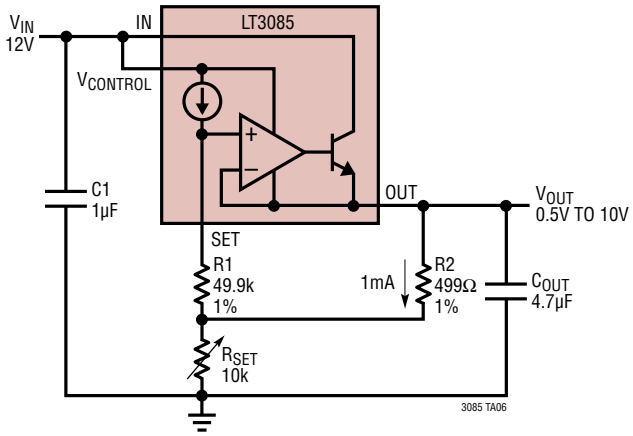

$V_{OUT} = 0.5V + 1mA \bullet R_{SET}$

TYPICAL APPLICATIONS

Adding Soft-Start

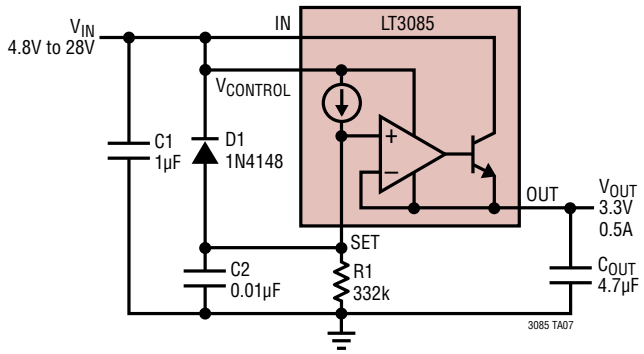

Coincident Tracking

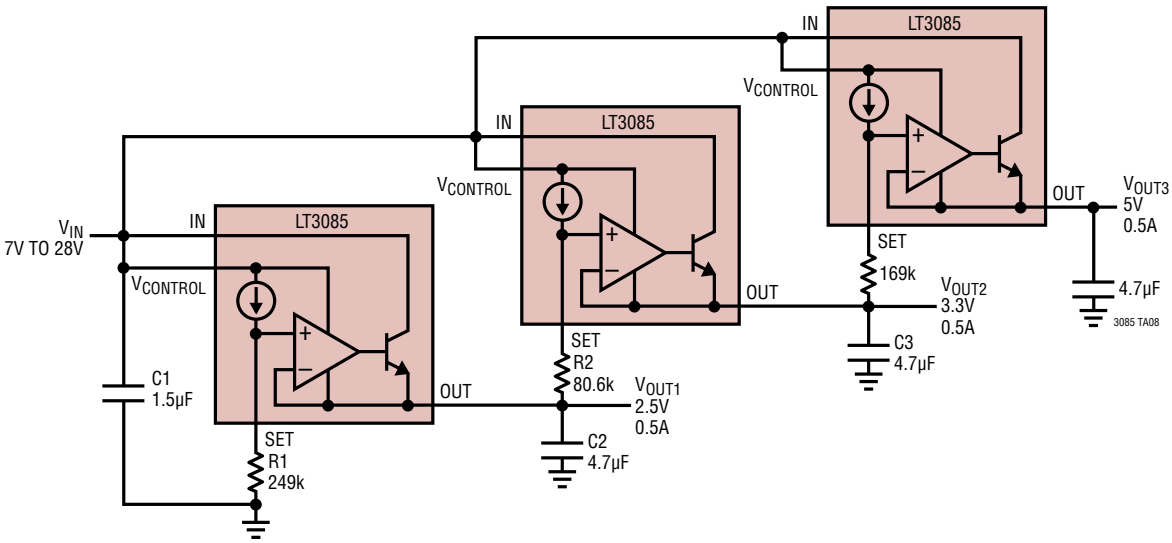

TYPICAL APPLICATIONS

Lab Supply

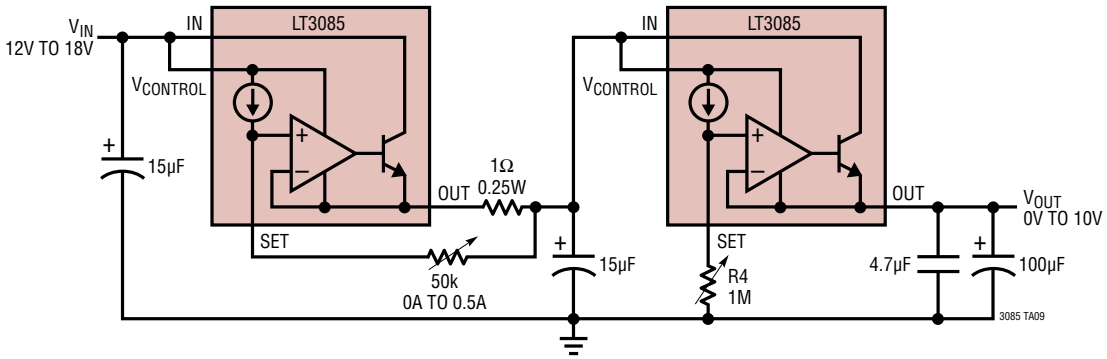

High Voltage Regulator

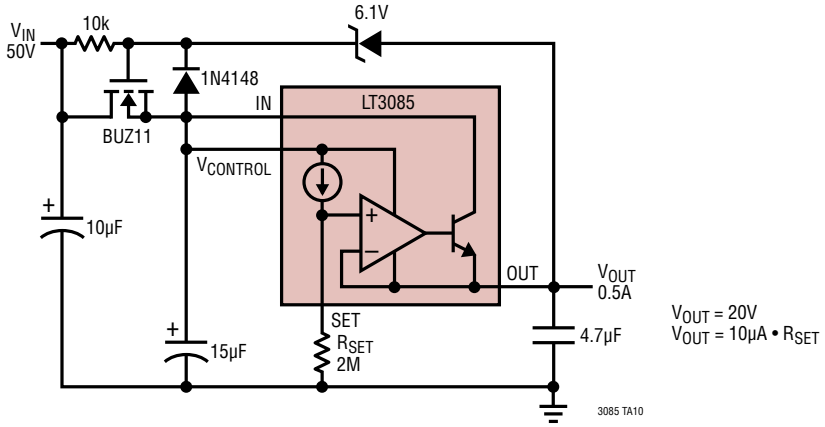

Ramp Generator

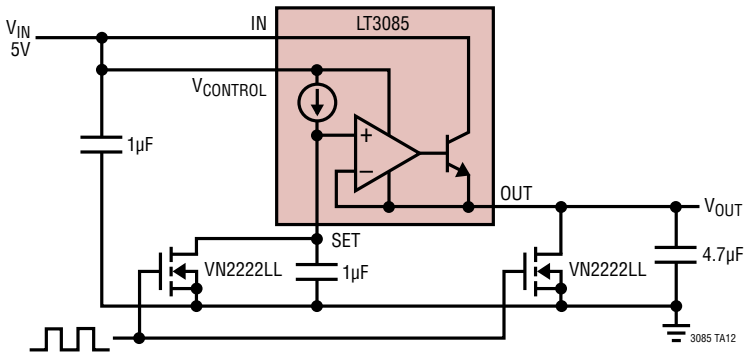

TYPICAL APPLICATIONS

Reference Buffer

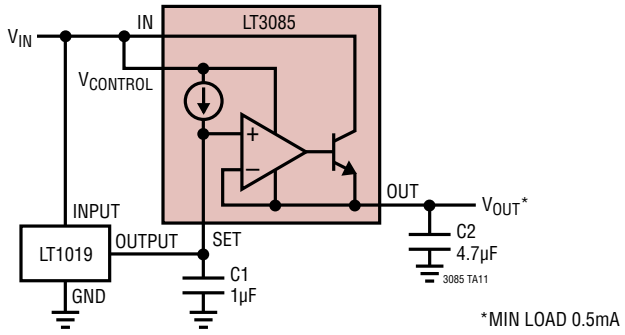

*MIN LOAD 0.5mA

Ground Clamp

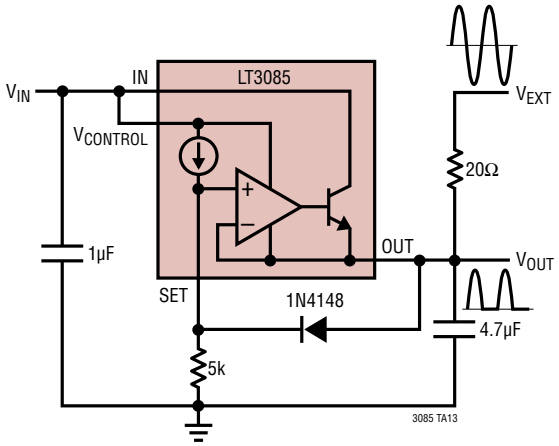

Boosting Fixed Output Regulators

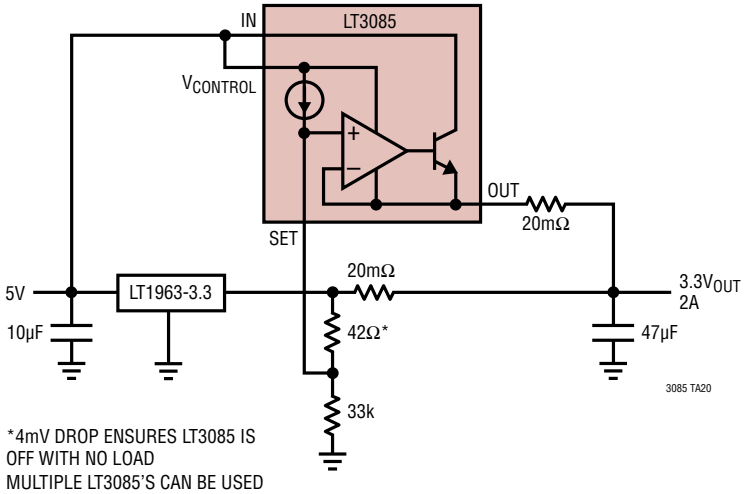

*4mV DROP ENSURES LT3085 IS
OFF WITH NO LOAD
MULTIPLE LT3085'S CAN BE USED

TYPICAL APPLICATIONS

Low Voltage, High Current Adjustable High Efficiency Regulator*

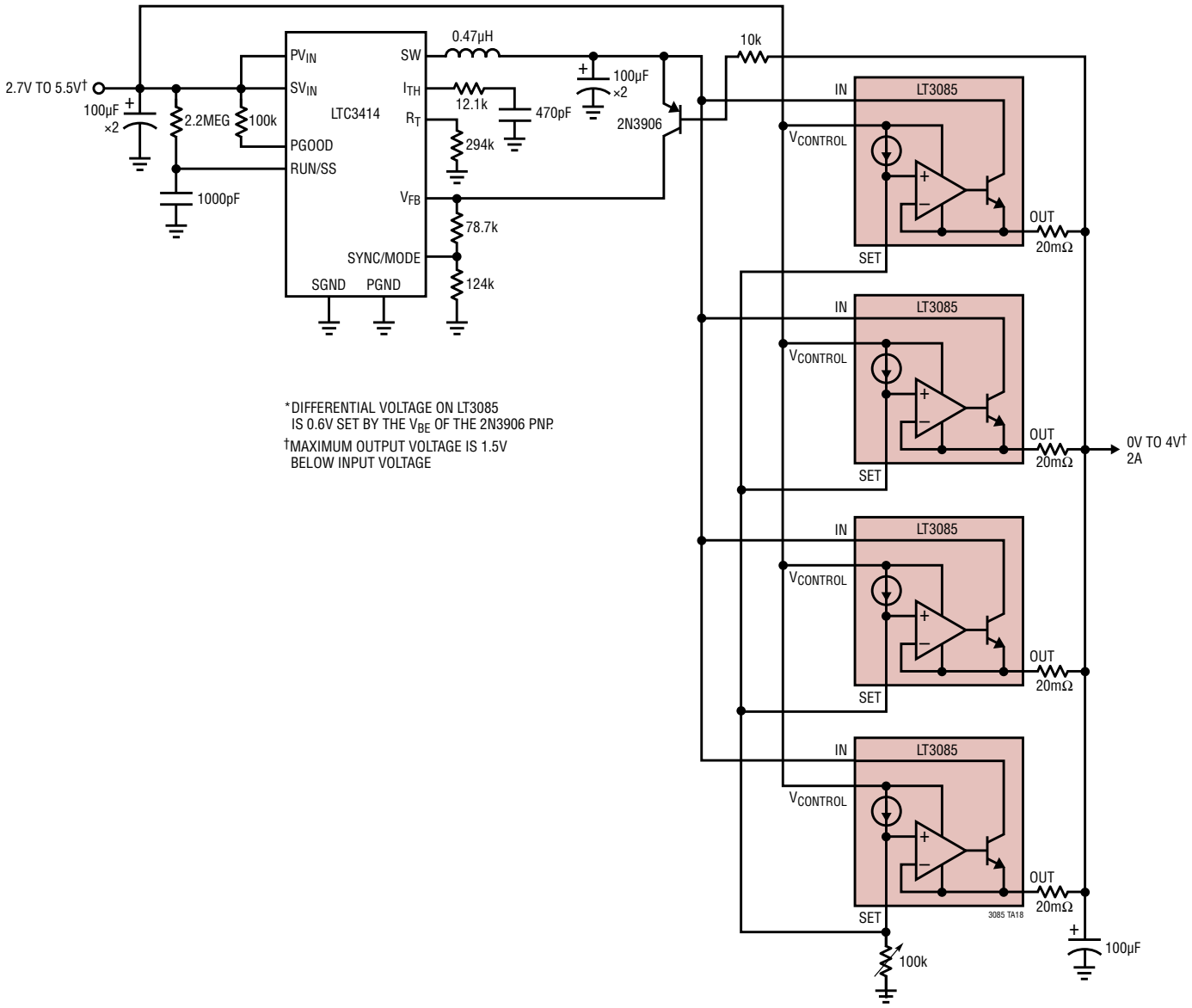

*DIFFERENTIAL VOLTAGE ON LT3085 IS 0.6V SET BY THE V_{BE} OF THE 2N3906 PNP.

†MAXIMUM OUTPUT VOLTAGE IS 1.5V BELOW INPUT VOLTAGE

TYPICAL APPLICATIONS

Adjustable High Efficiency Regulator*

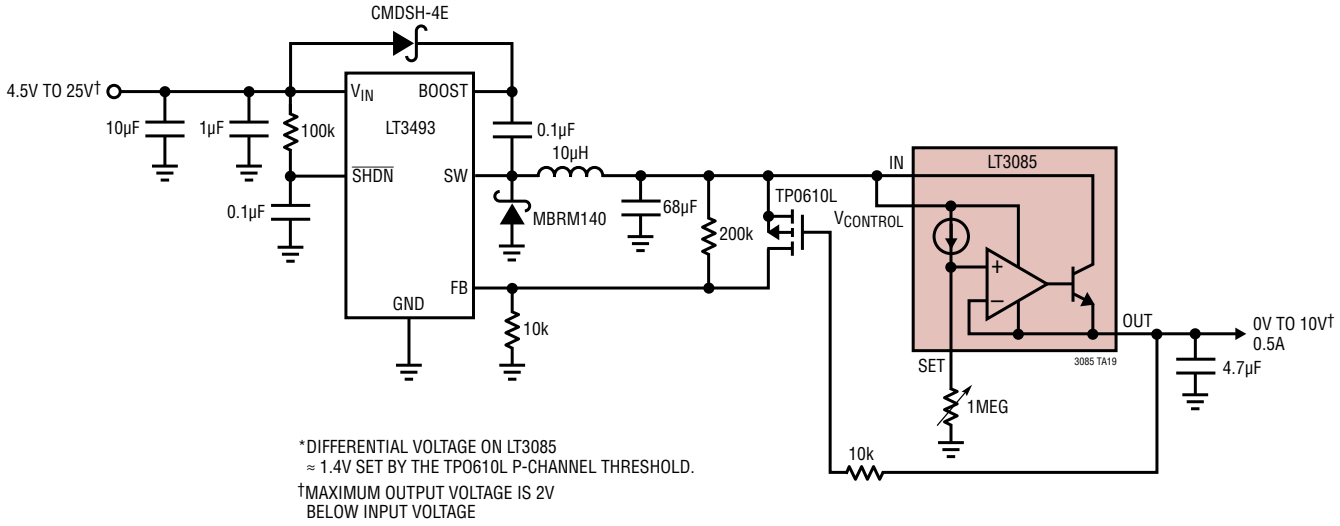

*DIFFERENTIAL VOLTAGE ON LT3085
≈ 1.4V SET BY THE TPO610L P-CHANNEL THRESHOLD.

†MAXIMUM OUTPUT VOLTAGE IS 2V
BELOW INPUT VOLTAGE

2 Terminal Current Source

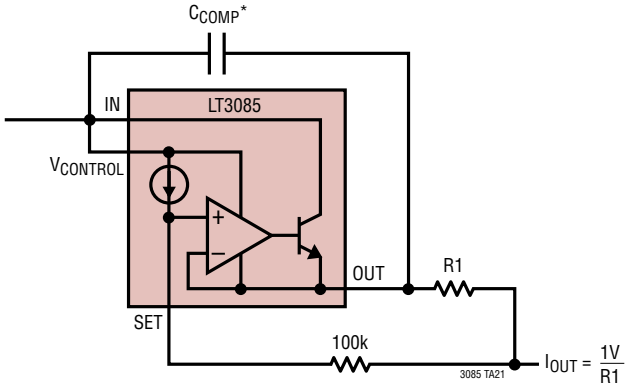

*CCOMP
R1 ≤ 10Ω 10µF
R1 ≥ 10Ω 2.2µF

PACKAGE DESCRIPTION

DCB Package
6-Lead Plastic DFN (2mm × 3mm)
(Reference LTC DWG # 05-08-1715 Rev A)

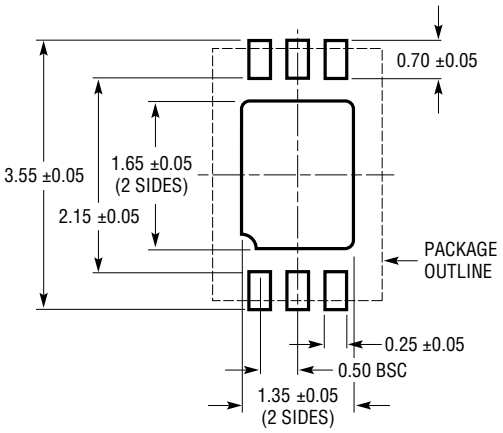

RECOMMENDED SOLDER PAD PITCH AND DIMENSIONS

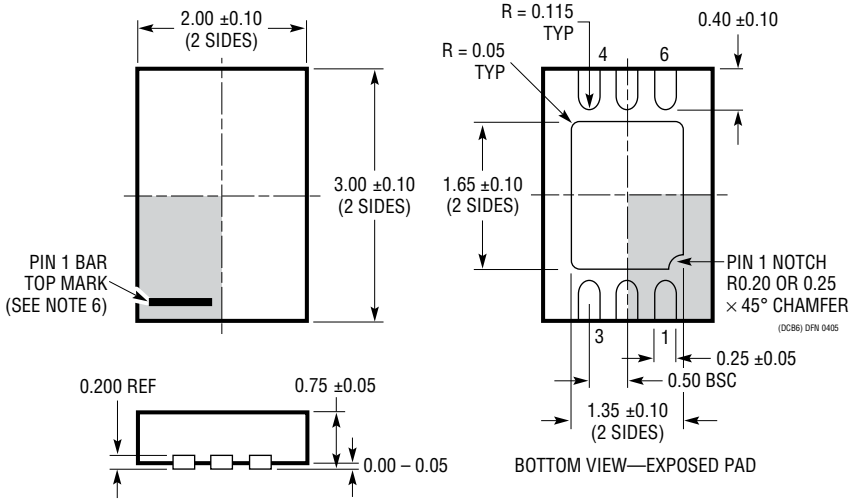

BOTTOM VIEW—EXPOSED PAD

NOTE:
1. DRAWING TO BE MADE A JEDEC PACKAGE OUTLINE M0-229 VARIATION OF (TBD)
2. DRAWING NOT TO SCALE
3. ALL DIMENSIONS ARE IN MILLIMETERS
4. DIMENSIONS OF EXPOSED PAD ON BOTTOM OF PACKAGE DO NOT INCLUDE MOLD FLASH. MOLD FLASH, IF PRESENT, SHALL NOT EXCEED 0.15mm ON ANY SIDE
5. EXPOSED PAD SHALL BE SOLDER PLATED
6. SHADED AREA IS ONLY A REFERENCE FOR PIN 1 LOCATION ON THE TOP AND BOTTOM OF PACKAGE

PACKAGE DESCRIPTION

MS8E Package
8-Lead Plastic MSOP, Exposed Die Pad
(Reference LTC DWG # 05-08-1662 Rev K)

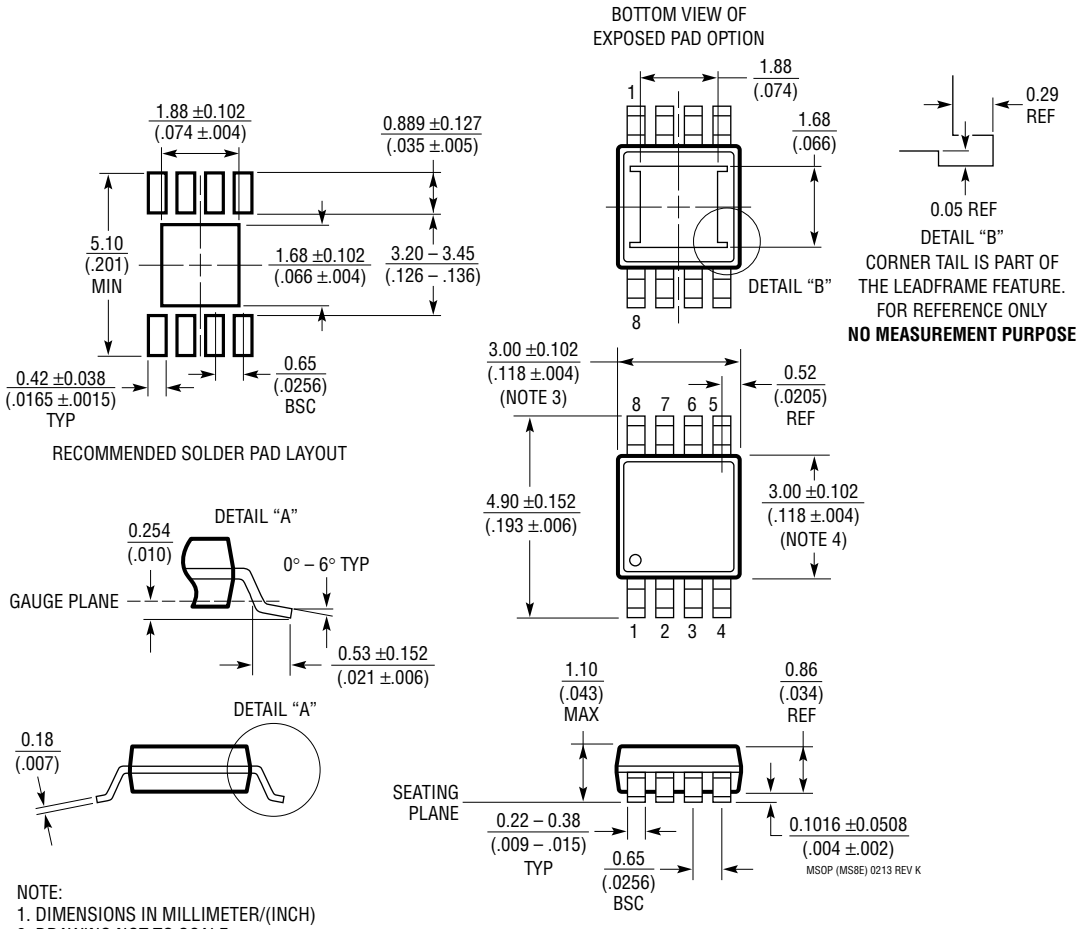

NOTE:
1. DIMENSIONS IN MILLIMETER/(INCH)
2. DRAWING NOT TO SCALE
3. DIMENSION DOES NOT INCLUDE MOLD FLASH, PROTRUSIONS OR GATE BURRS.
   MOLD FLASH, PROTRUSIONS OR GATE BURRS SHALL NOT EXCEED 0.152mm (.006") PER SIDE
4. DIMENSION DOES NOT INCLUDE INTERLEAD FLASH OR PROTRUSIONS.
   INTERLEAD FLASH OR PROTRUSIONS SHALL NOT EXCEED 0.152mm (.006") PER SIDE
5. LEAD COPLANARITY (BOTTOM OF LEADS AFTER FORMING) SHALL BE 0.102mm (.004") MAX
6. EXPOSED PAD DIMENSION DOES INCLUDE MOLD FLASH. MOLD FLASH ON E-PAD
   SHALL NOT EXCEED 0.254mm (.010") PER SIDE.

REVISION HISTORY (Revision history begins at Rev B)

REV	DATE	DESCRIPTION	PAGE NUMBER
B	6/10	Updated trademarks Revised Conditions in Electrical Characteristics table Changed I_{LOAD} value on curve G27 in Typical Performance Characteristics section Revised Figure 1 Added 200k resistor to drawing 3085 TA19 in Typical Application section Updated Package Description drawings	1 3 6 9 24 25, 26
C	02/21	Added AEC-Q100 Qualified for Automotive Applications to features table Added automotive products table (#W) Updated the Output Offset Voltage conditions Fixed typo on $V_{CONTROL}$ Pin Current graph Fixed typo on Pin Functions for OUT Fixed table numbering Fixed typo on $I_{OUT(MIN)}$ value	1 2 3 6 7 11,15 17

Information furnished by Analog Devices is believed to be accurate and reliable. However, no responsibility is assumed by Analog Devices for its use, nor for any infringements of patents or other rights of third parties that may result from its use. Specifications subject to change without notice. No license is granted by implication or otherwise under any patent or patent rights of Analog Devices.

TYPICAL APPLICATION

Paralleling Regulators

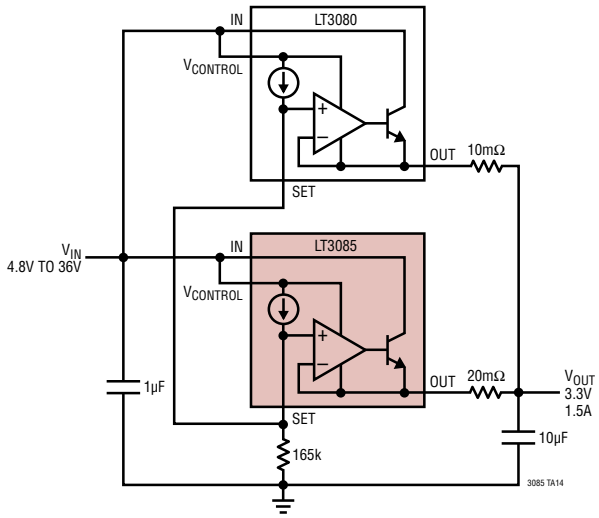

RELATED PARTS

PART NUMBER	DESCRIPTION	COMMENTS
LDOs		
LT1086	1.5A Low Dropout Regulator	Fixed 2.85V, 3.3V, 3.6V, 5V and 12V Output
LT1763	500mA, Low Noise LDO	300mV Dropout Voltage, Low Noise = 20µV_{RMS}, V_{IN}: 1.8V to 20V, SO-8 Package
LT3021	500mA VLDO Regulator	V_{IN}: 0.9V to 10V, Dropout Voltage = 190mV, V_{ADJ} = 200mV, 5mm × 5mm DFN-16, SO-8 Packages
LT3080	1.1A, Parallelable, Low Noise, Low Dropout Linear Regulator	300mV Dropout Voltage (2-Supply Operation), Low Noise = 40µV_{RMS}, V_{IN}: 1.2V to 36V, V_{OUT}: 0V to 35.7V, Current-Based Reference with 1-Resistor V_{OUT} Set, Directly Parallelable (No Op Amp Required), Stable with Ceramic Capacitors, TO-220, SOT-223, MSOP and 3mm × 3mm DFN Packages
LT3080-1	Parallelable 1.1A Adjustable Single Resistor Low Dropout Regulator (with Internal Ballast R)	300mV Dropout Voltage (2-Supply Operation), Low Noise = 40µV_{RMS}, V_{IN}: 1.2V to 36V, V_{OUT}: 0V to 35.7V, Current-Based Reference with 1-Resistor V_{OUT} Set, Directly Parallelable (No Op Amp Required), Stable with Ceramic Capacitors, TO-220, SOT-223, MSOP and 3mm × 3mm DFN Packages. LT3080-1 Version Has Integrated Ballast Resistor
LT1963A	1.5A Low Noise, Fast Transient Response LDO	340mV Dropout Voltage, Low Noise = 40µV_{RMS}, V_{IN}: 2.5V to 20V, TO-220, DD, SOT-223 and SO-8 Packages
LT1965	1.1A Low Noise LDO	290mV Dropout Voltage, Low Noise = 40µV_{RMS}, V_{IN}: 1.8V to 20V, V_{OUT}: 1.2V to 19.5V, Stable with Ceramic Caps TO-220, DDPak, MSOP and 3mm × 3mm DFN Packages
LTC®3026	1.5A Low Input Voltage VLDO™ Regulator	V_{IN}: 1.14V to 3.5V (Boost Enabled), 1.14V to 5.5V (with External 5V), V_{DO} = 0.1V, I_Q = 950µA, Stable with 10µF Ceramic Capacitors, 10-Lead MSOP and DFN Packages
Switching Regulators		
LT1976	High Voltage, 1.5A Step-Down Switching Regulator	f = 200kHz, I_Q = 100µA, TSSOP-16E Package
LTC3414	4A (I_{OUT}), 4MHz Synchronous Step-Down DC/DC Converter	95% Efficiency, V_{IN}: 2.25V to 5.5V, $V_{OUT(MIN)}$ = 0.8V, TSSOP Package
LTC3406/LTC3406B	600mA (I_{OUT}), 1.5MHz Synchronous Step-Down DC/DC Converter	95% Efficiency, V_{IN}: 2.5V to 5.5V, $V_{OUT(MIN)}$ = 0.6V, I_Q = 20µA, I_{SD} < 1µA, ThinSOT™ Package
LTC3411	1.25A (I_{OUT}), 4MHz Synchronous Step-Down DC/DC Converter	95% Efficiency, V_{IN}: 2.5V to 5.5V, $V_{OUT(MIN)}$ = 0.8V, I_Q = 60µA, I_{SD} < 1µA, 10-Lead MS or DFN Packages

© ANALOG DEVICES, INC. 2008-2021