# High Efficiency SO-8 N-Channel Switching Regulator Controller

## FEATURES

- N-Channel MOSFET Drive
- Implements Boost, Step-Down, SEPIC and Inverting Regulators
- **Wide $V_{IN}$ Range: 3.5V to 36V Operation**
- **Wide $V_{OUT}$ Range: 1.19V to 30V in Step-Down Configuration**
- **±1% 1.19V Reference**
- **Low Dropout Operation: 95% Duty Cycle**
- 200kHz Fixed Frequency
- Low Standby Current
- Very High Efficiency
- Remote Output Voltage Sense
- Logic-Controlled Micropower Shutdown
- Internal Diode for Bootstrapped Gate Drive
- Current Mode Operation for Excellent Line and Load Transient Response
- Available in an 8-Lead SO Package

## APPLICATIONS

- Notebook and Palmtop Computers, PDAs
- Cellular Telephones and Wireless Modems
- Battery-Operated Digital Devices
- DC Power Distribution Systems
- Battery Chargers

## DESCRIPTION

The LTC®1624 is a current mode switching regulator controller that drives an external N-channel power MOSFET using a fixed frequency architecture. It can be operated in all standard switching configurations including boost, step-down, inverting and SEPIC. Burst Mode™ operation provides high efficiency at low load currents. A maximum high duty cycle limit of 95% provides low dropout operation which extends operating time in battery-operated systems.

The operating frequency is internally set to 200kHz, allowing small inductor values and minimizing PC board space. The operating current level is user-programmable via an external current sense resistor. Wide input supply range allows operation from 3.5V to 36V (absolute maximum).

A multifunction pin ($I_{TH}$/RUN) allows external compensation for optimum load step response plus shutdown. Soft start can also be implemented with the $I_{TH}$/RUN pin to properly sequence supplies.

LT, LTC and LT are registered trademarks of Linear Technology Corporation.
Burst Mode is a trademark of Linear Technology Corporation.

## TYPICAL APPLICATION

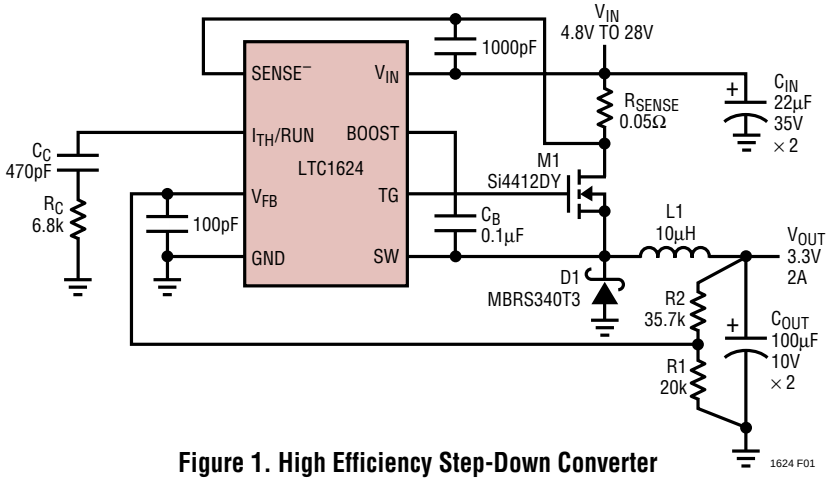


**Figure 1. High Efficiency Step-Down Converter**

## ABSOLUTE MAXIMUM RATINGS

Input Supply Voltage ($V_{IN}$) ..... 36V to –0.3V
Topside Driver Supply Voltage (BOOST) .... 42V to –0.3V
Switch Voltage (SW) ..... 36V to –0.6V
Differential Boost Voltage
(BOOST to SW) ..... 7.8V to –0.3V
$SENSE^-$ Voltage
$V_{IN}$ < 15V ..... ($V_{IN}$ + 0.3V) to –0.3V
$V_{IN}$ ≥ 15V ..... ($V_{IN}$ +0.3V) to ($V_{IN}$ –15V)
$I_{TH}$/RUN, $V_{FB}$ Voltages ..... 2.7V to –0.3V
Peak Driver Output Current < 10µs (TG) ..... 2A
Operating Temperature Range
LTC1624CS ..... 0°C to 70°C
LTC1624IS ..... –40°C to 85°C
Junction Temperature (Note 1) ..... 125°C
Storage Temperature Range ..... –65°C to 150°C
Lead Temperature (Soldering, 10 sec) ..... 300°C

## PACKAGE/ORDER INFORMATION

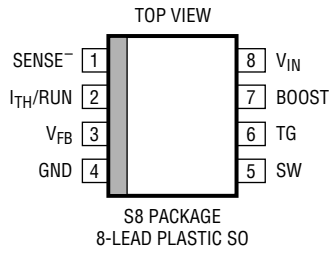


S8 PACKAGE
8-LEAD PLASTIC SO

$T_{JMAX}$ = 125°C, $\theta_{JA}$ = 110°C/W

| ORDER PART NUMBER |
|---|
| LTC1624CS8<br>LTC1624IS8 |
| **S8 PART MARKING** |
| 1624<br>1624I |

Consult factory for Military grade parts.

## ELECTRICAL CHARACTERISTICS

**$T_A$ = 25°C, $V_{IN}$ = 15V, unless otherwise noted.**

| SYMBOL | PARAMETER | CONDITIONS | | MIN | TYP | MAX | UNITS |
|---|---|---|---|---|---|---|---|
| **Main Control Loop** | | | | | | | |
| $I_{IN}$ $V_{FB}$ | Feedback Current | (Note 2) | | | 10 | 50 | nA |
| $V_{FB}$ | Feedback Voltage | (Note 2) | ● | 1.1781 | 1.19 | 1.2019 | V |
| $\Delta V_{LINE\ REG}$ | Reference Voltage Line Regulation | $V_{IN}$ = 3.6V to 20V (Note 2) | | | 0.002 | 0.01 | %/V |
| $\Delta V_{LOAD\ REG}$ | Output Voltage Load Regulation | (Note 2)<br>$I_{TH}$ Sinking 5µA<br>$I_{TH}$ Sourcing 5µA | <br>●<br>● | | <br>0.5<br>–0.5 | <br>0.8<br>–0.8 | <br>%<br>% |
| $V_{OVL}$ | Output Overvoltage Lockout | | | 1.24 | 1.28 | 1.32 | V |
| $I_Q$ | Input DC Supply Current<br>Normal Mode<br>Shutdown | (Note 3)<br><br>$V_{ITH/RUN}$ = 0V | | | <br>550<br>16 | <br>900<br>30 | <br>µA<br>µA |
| $V_{ITH/RUN}$ | Run Threshold | | | 0.6 | 0.8 | | V |
| $I_{ITH/RUN}$ | Run Current Source<br>Run Pullup Current | $V_{ITH/RUN}$ = 0.3V<br>$V_{ITH/RUN}$ = 1V | | –0.8<br>–50 | –2.5<br>–160 | –5.0<br>–350 | µA<br>µA |
| $\Delta V_{SENSE(MAX)}$ | Maximum Current Sense Threshold | $V_{FB}$ = 1.0V | | 145 | 160 | 185 | mV |
| <br>TG $t_r$<br>TG $t_f$ | TG Transition Time<br>Rise Time<br>Fall Time | <br>$C_{LOAD}$ = 3000pF<br>$C_{LOAD}$ = 3000pF | | | <br>50<br>50 | <br>150<br>150 | <br>ns<br>ns |
| $f_{OSC}$ | Oscillator Frequency | | ● | 175 | 200 | 225 | kHz |
| $V_{BOOST}$ | Boost Voltage | SW = 0V, $I_{BOOST}$ = 5mA, $V_{IN}$ = 8V | | 4.8 | 5.15 | 5.5 | V |
| $\Delta V_{BOOST}$ | Boost Load Regulation | SW = 0V, $I_{BOOST}$ = 2mA to 20mA | | | 3 | 5 | % |

The ● denotes specifications which apply over the full operating temperature range.

LTC1624CS: 0°C ≤ $T_A$ ≤ 70°C
LTC1624IS: –40°C ≤ $T_A$ ≤ 85°C

**Note 1:** $T_J$ is calculated from the ambient temperature $T_A$ and power dissipation $P_D$ according to the following formula:

$T_J = T_A + (P_D \bullet 110°C/W)$

**Note 2:** The LTC1624 is tested in a feedback loop which servos $V_{FB}$ to the midpoint for the error amplifier ($V_{ITH}$ = 1.8V).

**Note 3:** Dynamic supply current is higher due to the gate charge being delivered at the switching frequency. See Applications Information.

# TYPICAL PERFORMANCE CHARACTERISTICS

### Efficiency vs Load Current
### $V_{OUT}$ = 3.3V

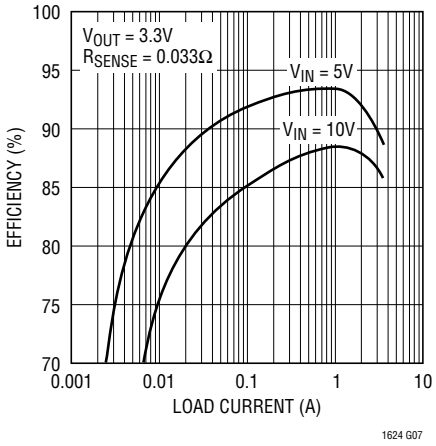


1624 G07

### Efficiency vs Input Voltage
### $V_{OUT}$ = 3.3V

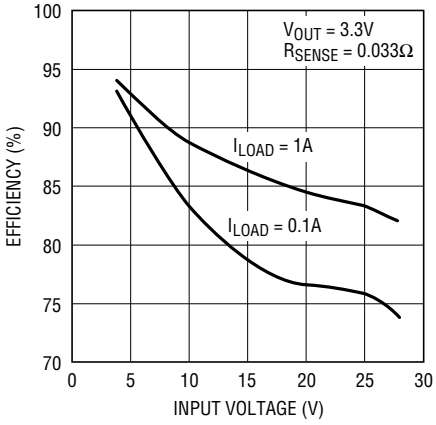


1624 G09

### Efficiency vs Load Current
### $V_{OUT}$ = 5V

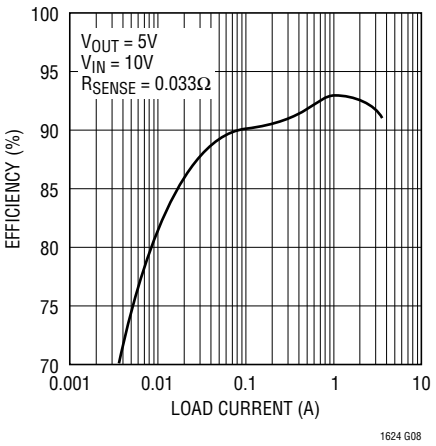


1624 G08

### Efficiency vs Input Voltage
### $V_{OUT}$ = 5V

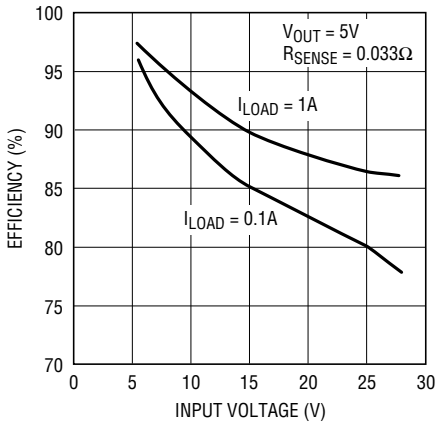


1624 G10

### $V_{IN}$ – $V_{OUT}$ Dropout Voltage vs Load Current

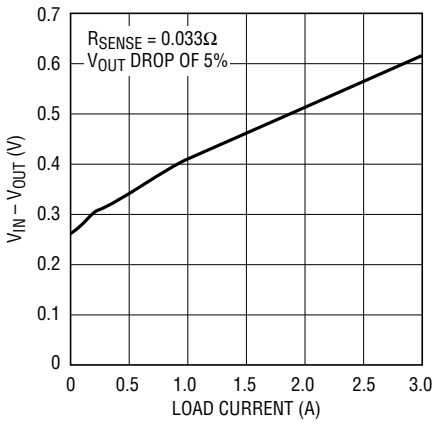


1624 G11

### Input Supply Current vs Input Voltage

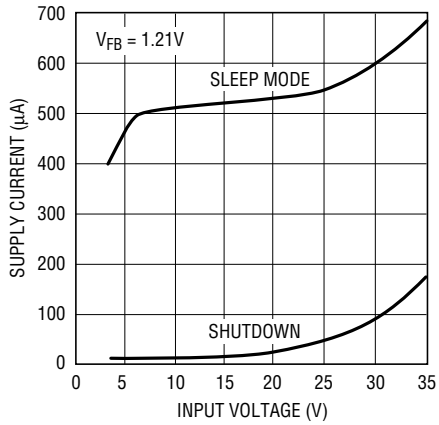


1624 G05

### Boost Line Regulation

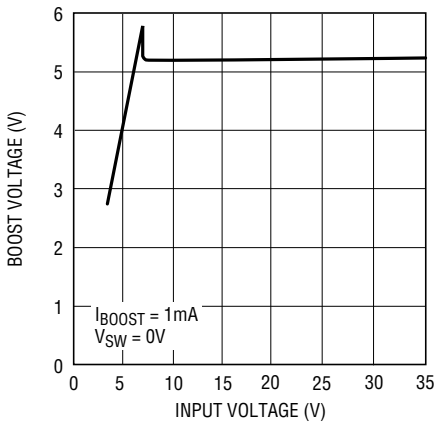


1624 G04

### Boost Load Regulation

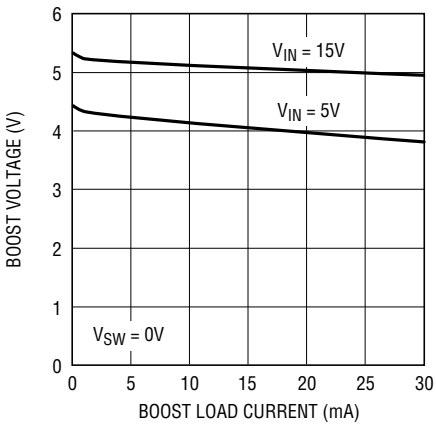


1624 G06

### Boost Voltage vs Temperature

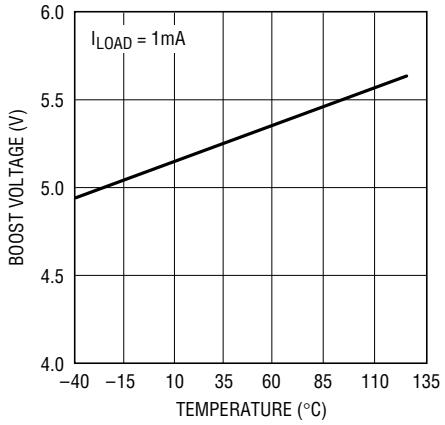


1624 G15

## TYPICAL PERFORMANCE CHARACTERISTICS

**$V_{ITH}$ vs Output Current**

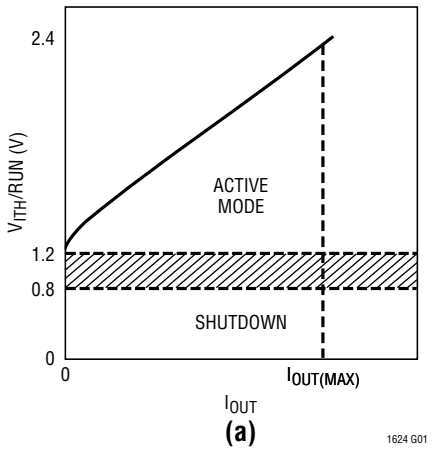


**$I_{ITH}$ vs $V_{ITH}$**

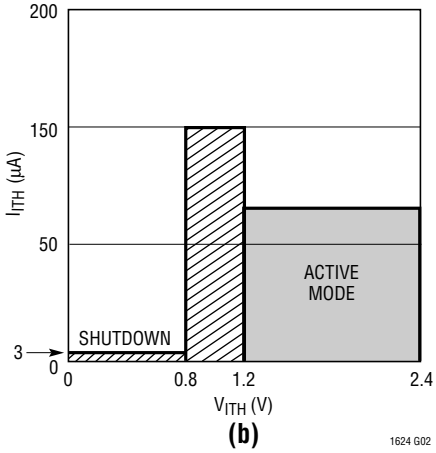


**$I_{TH}$/RUN Pin Source Current vs Temperature**

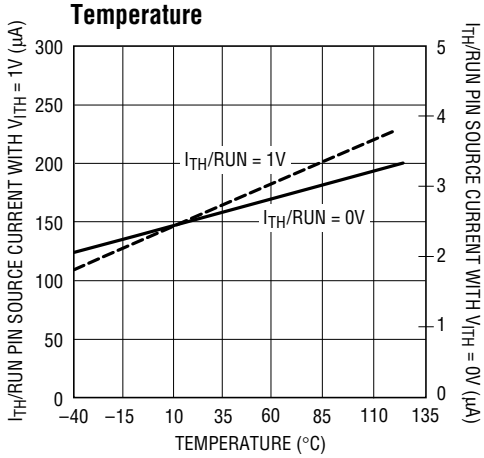


**Frequency vs Feedback Voltage**

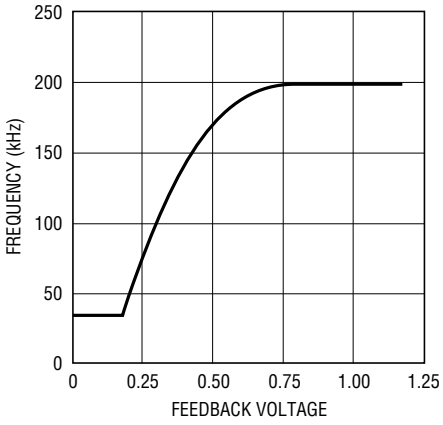


**Operating Frequency vs Temperature**

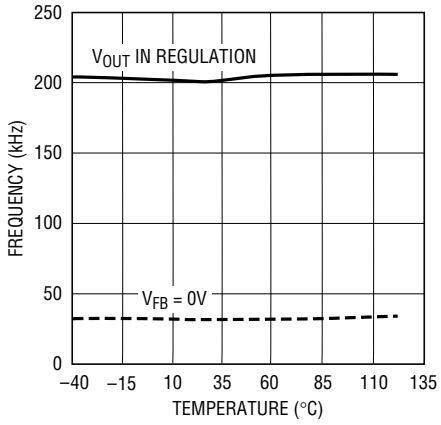


**Maximum Current Sense Threshold vs Temperature**

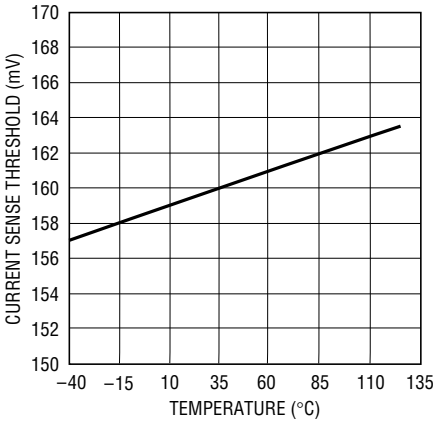


## PIN FUNCTIONS

**SENSE⁻ (Pin 1):** Connects to the (–) input for the current comparator. Built-in offsets between the SENSE⁻ and $V_{IN}$ pins in conjunction with $R_{SENSE}$ set the current trip thresholds. Do not pull this pin more than 15V below $V_{IN}$ or more than 0.3V below ground.

**$I_{TH}$/RUN (Pin 2):** Combination of Error Amplifier Compensation Point and Run Control Inputs. The current comparator threshold increases with this control voltage. Nominal voltage range for this pin is 1.19V to 2.4V. Forcing this pin below 0.8V causes the device to be shut down. In shutdown all functions are disabled and TG pin is held low.

**$V_{FB}$ (Pin 3):** Receives the feedback voltage from an external resistive divider across the output.

**GND (Pin 4):** Ground. Connect to the (–) terminal of $C_{OUT}$, the Schottky diode and the (–) terminal of $C_{IN}$.

**SW (Pin 5):** Switch Node Connection to Inductor. In step-down applications the voltage swing at this pin is from a Schottky diode (external) voltage drop below ground to $V_{IN}$.

## PIN FUNCTIONS

**TG (Pin 6):** High Current Gate Drive for Top N-Channel MOSFET. This is the output of a floating driver with a voltage swing equal to $INTV_{CC}$ superimposed on the switch node voltage SW.

**BOOST (Pin 7):** Supply to Topside Floating Driver. The bootstrap capacitor $C_B$ is returned to this pin. Voltage swing at this pin is from $INTV_{CC}$ to $V_{IN}$ + $INTV_{CC}$ in step-down applications. In non step-down topologies the voltage at this pin is constant and equal to $INTV_{CC}$ if SW = 0V.

**$V_{IN}$ (Pin 8):** Main Supply Pin and the (+) Input to the Current Comparator. Must be closely decoupled to ground.

## OPERATION (Refer to Functional Diagram)

### Main Control Loop

The LTC1624 uses a constant frequency, current mode architecture. During normal operation, the top MOSFET is turned on each cycle when the oscillator sets the RS latch and turned off when the main current comparator $I_1$ resets the RS latch. The peak inductor current at which $I_1$ resets the RS latch is controlled by the voltage on the $I_{TH}$/RUN pin, which is the output of error amplifier EA. The $V_{FB}$ pin, described in the pin functions, allows EA to receive an output feedback voltage from an external resistive divider. When the load current increases, it causes a slight decrease in $V_{FB}$ relative to the 1.19V reference, which in turn causes the $I_{TH}$/RUN voltage to increase until the average inductor current matches the new load current. While the top MOSFET is off, the internal bottom MOSFET is turned on for approximately 300ns to 400ns to recharge the bootstrap capacitor $C_B$.

The top MOSFET driver is biased from the floating bootstrap capacitor $C_B$ that is recharged during each off cycle. The dropout detector counts the number of oscillator cycles that the top MOSFET remains on and periodically forces a brief off period to allow $C_B$ to recharge.

The main control loop is shut down by pulling the $I_{TH}$/RUN pin below its 1.19V clamp voltage. Releasing $I_{TH}$/RUN allows an internal 2.5μA current source to charge compensation capacitor $C_C$. When the $I_{TH}$/RUN pin voltage reaches 0.8V the main control loop is enabled with the $I_{TH}$/RUN voltage pulled up by the error amp. Soft start can be implemented by ramping the voltage on the $I_{TH}$/RUN pin from 1.19V to its 2.4V maximum (see Applications Information section).

Comparator OV guards against transient output overshoots >7.5% by turning off the top MOSFET and keeping it off until the fault is removed.

### Low Current Operation

The LTC1624 is capable of Burst Mode operation in which the external MOSFET operates intermittently based on load demand. The transition to low current operation begins when comparator B detects when the $I_{TH}$/RUN voltage is below 1.5V. If the voltage across $R_{SENSE}$ does not exceed the offset of $I_2$ (approximately 20mV) for one full cycle, then on following cycles the top and internal bottom drives are disabled. This continues until the $I_{TH}$ voltage exceeds 1.5V, which causes drive to be returned to the TG pin on the next cycle.

### $INTV_{CC}$ Power/Boost Supply

Power for the top and internal bottom MOSFET drivers is derived from $V_{IN}$. An internal regulator supplies $INTV_{CC}$ power. To power the top driver in step-down applications an internal high voltage diode recharges the bootstrap capacitor $C_B$ during each off cycle from the $INTV_{CC}$ supply. A small internal N-channel MOSFET pulls the switch node (SW) to ground each cycle after the top MOSFET has turned off ensuring the bootstrap capacitor is kept fully charged.

## FUNCTIONAL DIAGRAM (Shown in a step-down application)

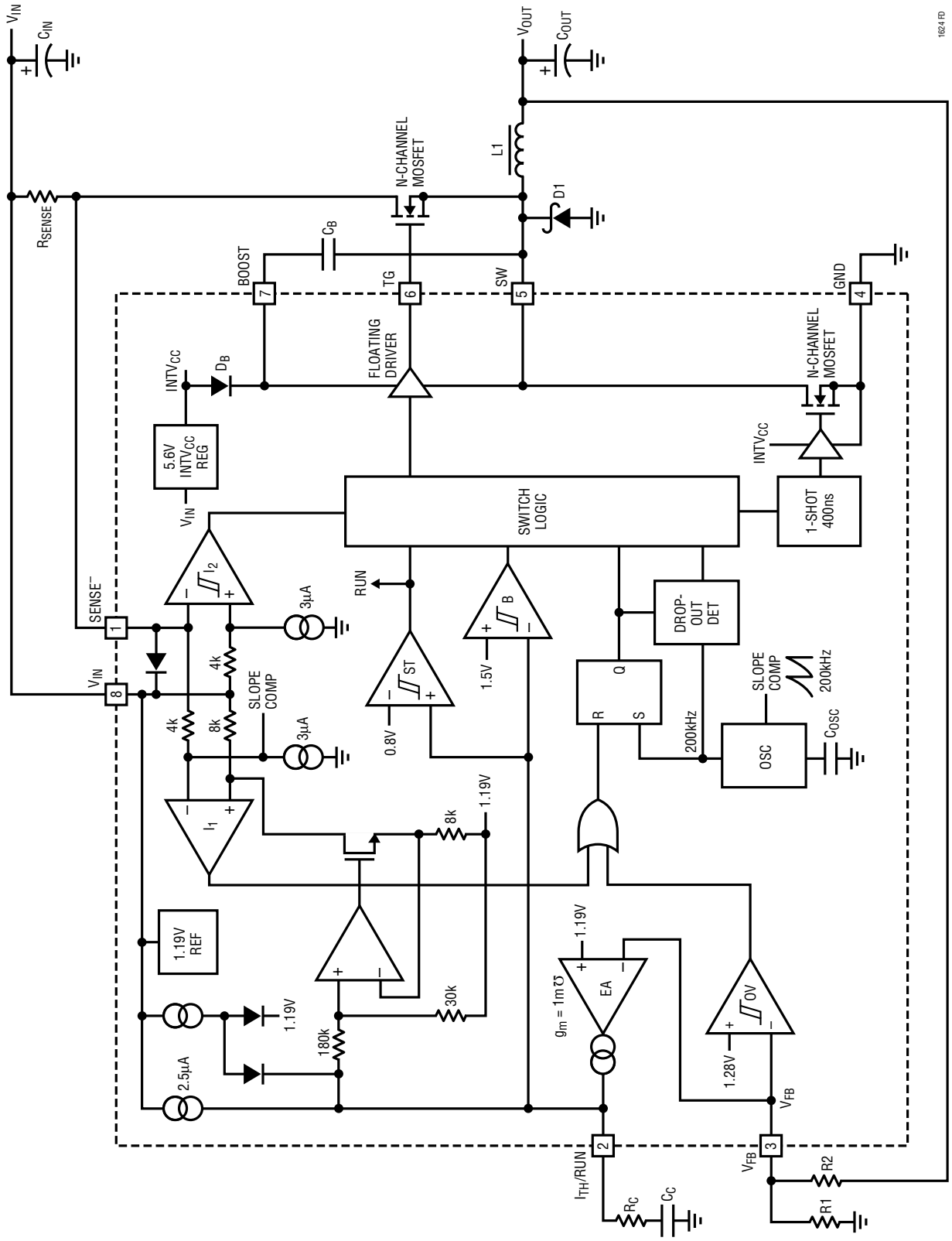

## APPLICATIONS INFORMATION

The LTC1624 can be used in a wide variety of switching regulator applications, the most common being the step-down converter. Other switching regulator architectures include step-up, SEPIC and positive-to-negative converters.

The basic LTC1624 step-down application circuit is shown in Figure 1 on the first page. External component selection is driven by the load requirement and begins with the selection of $R_{SENSE}$. Once $R_{SENSE}$ is known, the inductor can be chosen. Next, the power MOSFET and D1 are selected. Finally, $C_{IN}$ and $C_{OUT}$ are selected. The circuit shown in Figure 1 can be configured for operation up to an input voltage of 28V (limited by the external MOSFETs).

### Step-Down Converter: $R_{SENSE}$ Selection for Output Current

$R_{SENSE}$ is chosen based on the required output current. The LTC1624 current comparator has a maximum threshold of 160mV/$R_{SENSE}$. The current comparator threshold sets the peak of the inductor current, yielding a maximum average output current $I_{MAX}$ equal to the peak value less half the peak-to-peak ripple current, $\Delta I_L$.

Allowing a margin for variations in the LTC1624 and external component values yields:

$$R_{SENSE} = \frac{100mV}{I_{MAX}}$$

The LTC1624 works well with values of $R_{SENSE}$ from 0.005Ω to 0.5Ω.

### Step-Down Converter: Inductor Value Calculation

With the operating frequency fixed at 200kHz smaller inductor values are favored. Operating at higher frequencies generally results in lower efficiency because of MOSFET gate charge losses. In addition to this basic trade-off, the effect of inductor value on ripple current and low current operation must also be considered.

The inductor value has a direct effect on ripple current. The inductor ripple current $\Delta I_L$ decreases with higher inductance and increases with higher $V_{IN}$ or $V_{OUT}$:

$$\Delta I_L = \frac{V_{IN} - V_{OUT}}{(f)(L)}\left(\frac{V_{OUT} + V_D}{V_{IN} + V_D}\right)$$

where $V_D$ is the output Schottky diode forward drop.

Accepting larger values of $\Delta I_L$ allows the use of low inductances, but results in higher output voltage ripple and greater core losses. A reasonable starting point for setting ripple current is $\Delta I_L = 0.4(I_{MAX})$. Remember, the maximum $\Delta I_L$ occurs at the maximum input voltage.

The inductor value also has an effect on low current operation. Lower inductor values (higher $\Delta I_L$) will cause Burst Mode operation to begin at higher load currents, which can cause a dip in efficiency in the upper range of low current operation. In Burst Mode operation lower inductance values will cause the burst frequency to decrease. In general, inductor values from 5μH to 68μH are typical depending on the maximum input voltage and output current. See also Modifying Burst Mode Operation section.

### Step-Down Converter: Inductor Core Selection

Once the value for L is known, the type of inductor must be selected. High efficiency converters generally cannot afford the core loss found in low cost powdered iron cores, forcing the use of more expensive ferrite, molypermalloy or Kool Mμ® cores. Actual core loss is independent of core size for a fixed inductor value, but it is very dependent on inductance selected. As inductance increases, core losses go down. Unfortunately, increased inductance requires more turns of wire and, therefore, copper losses will increase.

Ferrite designs have very low core loss and are preferred at high switching frequencies, so design goals can concentrate on copper loss and preventing saturation. Ferrite core material saturates "hard," which means that inductance collapses abruptly when the peak design current is exceeded. This results in an abrupt increase in inductor ripple current and consequent output voltage ripple. Do not allow the core to saturate!

Molypermalloy (from Magnetics, Inc.) is a very good, low loss core material for toroids, but it is more expensive than ferrite. A reasonable compromise from the same manufacturer is Kool Mμ. Toroids are very space efficient, especially when you can use several layers of wire. Because they generally lack a bobbin, mounting is more difficult. However, designs for surface mount that do not increase the height significantly are available.

Kool Mu is a registered trademark of Magnetics, Inc.

## APPLICATIONS INFORMATION

### Step-Down Converter: Power MOSFET Selection

One external N-channel power MOSFET must be selected for use with the LTC1624 for the top (main) switch.

The peak-to-peak gate drive levels are set by the $INTV_{CC}$ voltage. This voltage is typically 5V. Consequently, logic level threshold MOSFETs must be used in most LTC1624 applications. If low input voltage operation is expected ($V_{IN}$ < 5V) sublogic level threshold MOSFETs should be used. Pay close attention to the $BV_{DSS}$ specification for the MOSFETs as well; many of the logic level MOSFETs are limited to 30V or less.

Selection criteria for the power MOSFET include the "ON" resistance $R_{DS(ON)}$, reverse transfer capacitance $C_{RSS}$, input voltage and maximum output current. When the LTC1624 is operating in continuous mode the duty cycle for the top MOSFET is given by:

$$\text{Main Switch Duty Cycle} = \frac{V_{OUT} + V_D}{V_{IN} + V_D}$$

The MOSFET power dissipation at maximum output current is given by:

$$P_{MAIN} = \frac{V_{OUT} + V_D}{V_{IN} + V_D}\left(I_{MAX}\right)^2\left(1+\delta\right) R_{DS(ON)} + k\left(V_{IN}\right)^{1.85}\left(I_{MAX}\right)\left(C_{RSS}\right)\left(f\right)$$

where $\delta$ is the temperature dependency of $R_{DS(ON)}$ and k is a constant inversely related to the gate drive current.

MOSFETs have $I^2R$ losses, plus the $P_{MAIN}$ equation includes an additional term for transition losses that are highest at high output voltages. For $V_{IN}$ < 20V the high current efficiency generally improves with larger MOSFETs, while for $V_{IN}$ > 20V the transition losses rapidly increase to the point that the use of a higher $R_{DS(ON)}$ device with lower $C_{RSS}$ actual provides higher efficiency. The diode losses are greatest at high input voltage or during a short circuit when the diode duty cycle is nearly 100%.

The term $(1+\delta)$ is generally given for a MOSFET in the form of a normalized $R_{DS(ON)}$ vs Temperature curve, but $\delta$ = 0.005/°C can be used as an approximation for low voltage MOSFETs. $C_{RSS}$ is usually specified in the MOSFET characteristics. The constant k = 2.5 can be used to estimate the contributions of the two terms in the $P_{MAIN}$ dissipation equation.

### Step-Down Converter: Output Diode Selection (D1)

The Schottky diode D1 shown in Figure 1 conducts during the off-time. It is important to adequately specify the diode peak current and average power dissipation so as not to exceed the diode ratings.

The most stressful condition for the output diode is under short circuit ($V_{OUT}$ = 0V). Under this condition, the diode must safely handle $I_{SC(PK)}$ at close to 100% duty cycle. Under normal load conditions, the average current conducted by the diode is simply:

$$I_{DIODE(AVG)} = I_{LOAD(AVG)}\left(\frac{V_{IN} - V_{OUT}}{V_{IN} + V_D}\right)$$

Remember to keep lead lengths short and observe proper grounding (see Board Layout Checklist) to avoid ringing and increased dissipation.

The forward voltage drop allowable in the diode is calculated from the maximum short-circuit current as:

$$V_D \approx \frac{P_D}{I_{SC(AVG)}}\left(\frac{V_{IN} + V_D}{V_{IN}}\right)$$

where $P_D$ is the allowable diode power dissipation and will be determined by efficiency and/or thermal requirements (see Efficiency Considerations).

### Step-Down Converter: $C_{IN}$ and $C_{OUT}$ Selection

In continuous mode the source current of the top N-channel MOSFET is a square wave of approximate duty cycle $V_{OUT}/V_{IN}$. To prevent large voltage transients, a low ESR input capacitor sized for the maximum RMS current must be used. The maximum RMS capacitor current is given by:

$$C_{IN}\ \text{Required}\ I_{RMS} \approx I_{MAX}\frac{\left[V_{OUT}\left(V_{IN} - V_{OUT}\right)\right]^{1/2}}{V_{IN}}$$

This formula has a maximum at $V_{IN} = 2V_{OUT}$, where $I_{RMS} = I_{OUT}/2$. This simple worst-case condition is com-

## APPLICATIONS INFORMATION

monly used for design because even significant deviations do not offer much relief. Note that capacitor manufacturer's ripple current ratings are often based on only 2000 hours of life. This makes it advisable to further derate the capacitor, or to choose a capacitor rated at a higher temperature than required. Several capacitors may also be paralleled to meet size or height requirements in the design. Always consult the manufacturer if there is any question.

The selection of $C_{OUT}$ is driven by the required effective series resistance (ESR). Typically, once the ESR requirement is satisfied the capacitance is adequate for filtering. The output ripple ($\Delta V_{OUT}$) is determined by:

$$\Delta V_{OUT} \approx \Delta I_L \left( ESR + \frac{1}{4fC_{OUT}} \right)$$

where f = operating frequency, $C_{OUT}$ = output capacitance and $\Delta I_L$ = ripple current in the inductor. The output ripple is highest at maximum input voltage since $\Delta I_L$ increases with input voltage. With $\Delta I_L = 0.4 I_{OUT(MAX)}$ the output ripple will be less than 100mV at maximum $V_{IN}$, assuming:

$C_{OUT}$ Required ESR < $2R_{SENSE}$

Manufacturers such as Nichicon, United Chemicon and SANYO should be considered for high performance through-hole capacitors. The OS-CON semiconductor dielectric capacitor available from SANYO has the lowest ESR(size) product of any aluminum electrolytic at a somewhat higher price. Once the ESR requirement for $C_{OUT}$ has been met, the RMS current rating generally far exceeds the $I_{RIPPLE(P-P)}$ requirement.

In surface mount applications multiple capacitors may have to be paralleled to meet the ESR or RMS current handling requirements of the application. Aluminum electrolytic and dry tantalum capacitors are both available in surface mount configurations. In the case of tantalum it is critical that the capacitors are surge tested for use in switching power supplies. An excellent choice is the AVX TPS series of surface mount tantalums, available in case heights ranging from 2mm to 4mm. Other capacitor types include SANYO OS-CON, Nichicon WF series and Sprague 595D series and the new ceramics. Ceramic capacitors are now available in extremely low ESR and high ripple current ratings that are ideal for input capacitor applications. Consult the manufacturer for other specific recommendations.

### $INTV_{CC}$ Regulator

An internal regulator produces the 5V supply that powers the drivers and internal circuitry within the LTC1624. Good $V_{IN}$ bypassing is necessary to supply the high transient currents required by the MOSFET gate drivers.

High input voltage applications in which large MOSFETs are being driven at high frequencies may cause the maximum junction temperature rating for the LTC1624 to be exceeded. The supply current is dominated by the gate charge supply current as discussed in the Efficiency Considerations section. The junction temperature can be estimated by using the equations given in Note 1 of the Electrical Characteristics table. For example, the LTC1624 is limited to less than 17mA from a 30V supply:

$T_J = 70°C + (17mA)(30V)(110°C/W) = 126°C$

To prevent maximum junction temperature from being exceeded, the input supply current must be checked operating in continuous mode at maximum $V_{IN}$.

### Step-Down Converter: Topside MOSFET Driver Supply ($C_B$, $D_B$)

An external bootstrap capacitor $C_B$ connected to the BOOST pin supplies the gate drive voltage for the topside MOSFET. Capacitor $C_B$ in the functional diagram is charged through internal diode $D_B$ from $INTV_{CC}$ when the SW pin is low. When the topside MOSFET is to be turned on, the driver places the $C_B$ voltage across the gate to source of the MOSFET. This enhances the MOSFET and turns on the topside switch. The switch node voltage SW rises to $V_{IN}$ and the BOOST pin rises to $V_{IN} + INTV_{CC}$. The value of the boost capacitor $C_B$ needs to be 50 times greater than the total input capacitance of the topside MOSFET. In most applications 0.1µF is adequate.

Significant efficiency gains can be realized by supplying topside driver operating voltage from the output, since the $V_{IN}$ current resulting from the driver and control currents will be scaled by a factor of (Duty Cycle)/(Efficiency). For 5V regulators this simply means connecting the BOOST

## APPLICATIONS INFORMATION

pin through a small Schottky diode (like a Central CMDSH-3) to $V_{OUT}$ as shown in Figure 10. However, for 3.3V and other lower voltage regulators, additional circuitry is required to derive boost supply power from the output.

For low input voltage operation ($V_{IN}$ < 7V), a Schottky diode can be connected from $V_{IN}$ to BOOST to increase the external MOSFET gate drive voltage. Be careful not to exceed the maximum voltage on BOOST to SW pins of 7.8V.

### Output Voltage Programming

The output voltage is set by a resistive divider according to the following formula:

$$V_{OUT} = 1.19V\left(1+\frac{R2}{R1}\right)$$

The external resistive divider is connected to the output as shown in Figure 2, allowing remote voltage sensing. When using remote sensing, a local 100Ω resistor should be connected from L1 to R2 to prevent $V_{OUT}$ from running away if the sense lead is disconnected.

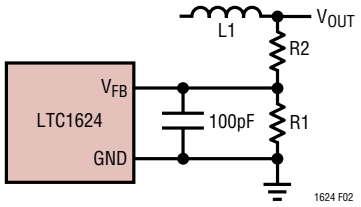


**Figure 2. Setting the LTC1624 Output Voltage**

### $I_{TH}$/RUN Function

The $I_{TH}$/RUN pin is a dual purpose pin that provides the loop compensation and a means to shut down the LTC1624. Soft start can also be implemented with this pin. Soft start reduces surge currents from $V_{IN}$ by gradually increasing the internal current limit. *Power supply sequencing* can also be accomplished using this pin.

An internal 2.5μA current source charges up the external capacitor $C_C$. When the voltage on $I_{TH}$/RUN reaches 0.8V the LTC1624 begins operating. At this point the error amplifier pulls up the $I_{TH}$/RUN pin to its maximum of 2.4V (assuming $V_{OUT}$ is starting low).

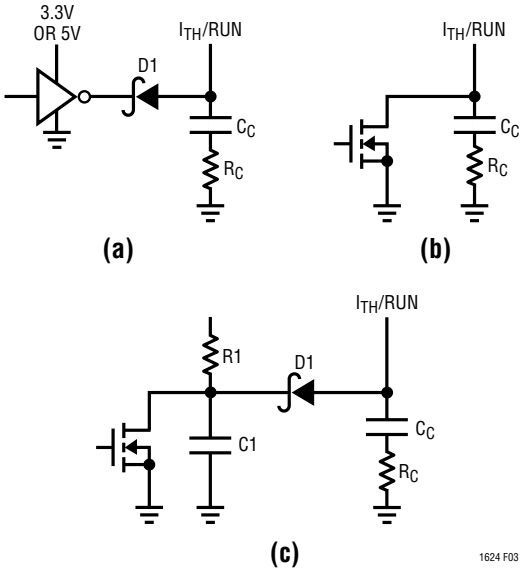


**Figure 3. $I_{TH}$/RUN Pin Interfacing**

Soft start can be implemented by ramping the voltage on $I_{TH}$/RUN during start-up as shown in Figure 3(c). As the voltage on $I_{TH/RUN}$ ramps from 1.19V to 2.4V the internal peak current limit is also ramped at a proportional linear rate. The peak current limit begins at approximately $10mV/R_{SENSE}$ (at $V_{ITH/RUN}$ = 1.4V) and ends at:

$160mV/R_{SENSE}$ ($V_{ITH/RUN}$ = 2.4V)

The output current thus ramps up slowly, charging the output capacitor. The peak inductor current and maximum output current are as follows:

$$I_{L(PEAK)} = (V_{ITH/RUN} - 1.3V)/(6.8R_{SENSE})$$

$$I_{OUT(MAX)} = I_{LPEAK} - \Delta I_L/2$$

with $\Delta I_L$ = ripple current in the inductor.

During normal operation the voltage on the $I_{TH}$/RUN pin will vary from 1.19V to 2.4V depending on the load current. Pulling the $I_{TH}$/RUN pin below 0.8V puts the LTC1624 into a low quiescent current shutdown ($I_Q$ < 30μA). This pin can be driven directly from logic as shown in Figures 3(a) and 3(b).

### Efficiency Considerations

The percent efficiency of a switching regulator is equal to the output power divided by the input power times 100%. It is often useful to analyze individual losses to determine

## APPLICATIONS INFORMATION

what is limiting the efficiency and which change would produce the most improvement. Percent efficiency can be expressed as:

%Efficiency = 100% – (L1 + L2 + L3 + ...)

where L1, L2, etc. are the individual losses as a percentage of input power.

Although all dissipative elements in the circuit produce losses, four main sources usually account for most of the losses in LTC1624 circuits:

1. LTC1624 $V_{IN}$ current
2. $I^2R$ losses
3. Topside MOSFET transition losses
4. Voltage drop of the Schottky diode

1. The $V_{IN}$ current is the sum of the DC supply current $I_Q$, given in the Electrical Characteristics table, and the MOSFET driver and control currents. The MOSFET driver current results from switching the gate capacitance of the power MOSFET. Each time a MOSFET gate is switched from low to high to low again, a packet of charge dQ moves from $INTV_{CC}$ to ground. The resulting dQ/dt is a current out of $V_{IN}$ which is typically much larger than the control circuit current. In continuous mode, $I_{GATECHG} = f(Q_T + Q_B)$, where $Q_T$ and $Q_B$ are the gate charges of the topside and internal bottom side MOSFETs.

   By powering BOOST from an output-derived source (Figure 10 application), the additional $V_{IN}$ current resulting from the topside driver will be scaled by a factor of (Duty Cycle)/(Efficiency). For example, in a 20V to 5V application, 5mA of $INTV_{CC}$ current results in approximately 1.5mA of $V_{IN}$ current. This reduces the midcurrent loss from 5% or more (if the driver was powered directly from $V_{IN}$) to only a few percent.

2. $I^2R$ losses are predicted from the DC resistances of the MOSFET, inductor and current shunt. In continuous mode the average output current flows through L but is "chopped" between the topside main MOSFET/current shunt and the Schottky diode. The resistances of the topside MOSFET and $R_{SENSE}$ multiplied by the duty cycle can simply be summed with the resistance of L to obtain $I^2R$ losses. (Power is dissipated in the sense resistor only when the topside MOSFET is on. The $I^2R$ loss is thus reduced by the duty cycle.) For example, at 50% DC, if $R_{DS(ON)} = 0.05\Omega$, $R_L = 0.15\Omega$ and $R_{SENSE} = 0.05\Omega$, then the effective total resistance is $0.2\Omega$. This results in losses ranging from 2% to 8% for $V_{OUT} = 5V$ as the output current increases from 0.5A to 2A. $I^2R$ losses cause the efficiency to drop at high output currents.

3. Transition losses apply only to the topside MOSFET(s), and only when operating at high input voltages (typically 20V or greater). Transition losses can be estimated from:

   $$\text{Transition Loss} = 2.5(V_{IN})^{1.85}(I_{MAX})(C_{RSS})(f)$$

4. The Schottky diode is a major source of power loss at high currents and gets worse at high input voltages. The diode loss is calculated by multiplying the forward voltage drop times the diode duty cycle multiplied by the load current. For example, assuming a duty cycle of 50% with a Schottky diode forward voltage drop of 0.5V, the loss is a relatively constant 5%.

   As expected, the $I^2R$ losses and Schottky diode loss dominate at high load currents. Other losses including $C_{IN}$ and $C_{OUT}$ ESR dissipative losses and inductor core losses generally account for less than 2% total additional loss.

### Checking Transient Response

The regulator loop response can be checked by looking at the load transient response. Switching regulators take several cycles to respond to a step in DC (resistive) load current. When a load step occurs, $V_{OUT}$ immediately shifts by an amount equal to ($\Delta I_{LOAD}$ • ESR), where ESR is the effective series resistance of $C_{OUT}$. $\Delta I_{LOAD}$ also begins to charge or discharge $C_{OUT}$ which generates a feedback error signal. The regulator loop then acts to return $V_{OUT}$ to its steady-state value. During this recovery time $V_{OUT}$ can be monitored for overshoot or ringing that would indicate a stability problem. The $I_{TH}$ external components shown in the Figure 1 circuit will provide adequate compensation for most applications.

A second, more severe transient, is caused by switching in loads with large (>1µF) supply bypass capacitors. The discharged bypass capacitors are effectively put in parallel

## APPLICATIONS INFORMATION

with $C_{OUT}$, causing a rapid drop in $V_{OUT}$. No regulator can deliver enough current to prevent this problem if the load switch resistance is low and it is driven quickly. The only solution is to limit the rise time of the switch drive so that the load rise time is limited to approximately (25 • $C_{LOAD}$). Thus a 10µF capacitor would require a 250µs rise time, limiting the charging current to about 200mA.

### Automotive Considerations: Plugging into the Cigarette Lighter

As battery-powered devices go mobile there is a natural interest in plugging into the cigarette lighter in order to conserve or even recharge battery packs during operation. But before you connect, be advised: you are plugging into the supply from hell. The main battery line in an automobile is the source of a number of nasty potential transients, including load dump, reverse battery and double battery.

Load dump is the result of a loose battery cable. When the cable breaks connection, the field collapse in the alternator can cause a positive spike as high as 60V which takes several hundred milliseconds to decay. Reverse battery is just what it says, while double battery is a consequence of tow-truck operators finding that a 24V jump start cranks cold engines faster than 12V.

The network shown in Figure 4 is the most straightforward approach to protect a DC/DC converter from the ravages of an automotive battery line. The series diode prevents current from flowing during reverse battery, while the transient suppressor clamps the input voltage during load dump. Note that the transient suppressor should not conduct during double battery operation, but must still clamp the input voltage below breakdown of the converter. Although the LTC1624 has a maximum input voltage of 36V, most applications will be limited to 30V by the MOSFET $BV_{DSS}$.

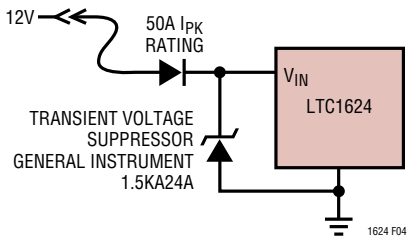


**Figure 4. Plugging into the Cigarette Lighter**

### Modifying Burst Mode Operation

The LTC1624 automatically enters Burst Mode operation at low output currents to boost efficiency. The point when continuous mode operation changes to Burst Mode operation scales as a function of maximum output current. The output current when Burst Mode operation commences is approximately 8mV/$R_{SENSE}$ (8% of maximum output current).

With the additional circuitry shown in Figure 5 the LTC1624 can be forced to stay in continuous mode longer at low output currents. Since the LTC1624 is not a fully synchronous architecture, it will eventually start to skip cycles as the load current drops low enough. The point when the minimum on-time (450ns) is reached determines the load current when cycle skipping begins at approximately 1% of maximum output current. Using the circuit in Figure 5 the LTC1624 will begin to skip cycles but stays in regulation when $I_{OUT}$ is less than $I_{OUT(MIN)}$:

$$I_{OUT(MIN)} = \left( \frac{t_{ON(MIN)}^2 f}{2L} \right) \left( V_{IN} - V_{OUT} \right) \left( \frac{V_{IN} + V_D}{V_{OUT} + V_D} \right)$$

where $t_{ON(MIN)}$ = 450ns, f = 200kHz.

The transistor Q1 in the circuit of Figure 5 operates as a current source developing an 18mV offset across the

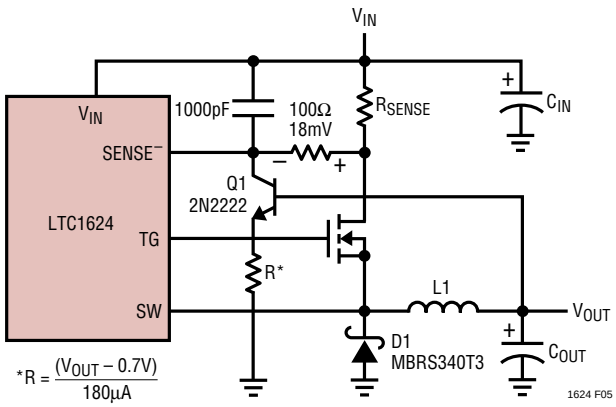


**Figure 5. Modifying Burst Mode Operation**

## APPLICATIONS INFORMATION

100Ω resistor in series with the SENSE$^-$ pin. This offset cancels the internal offset in current comparator $I_2$ (refer to Functional Diagram). This comparator in conjunction with the voltage on the $I_{TH}$/RUN pin determines when to enter into Burst Mode operation (refer to Low Current Operation in Operation section). With the additional external offset present, the drive to the topside MOSFET is always enabled every cycle and constant frequency operation occurs for $I_{OUT} > I_{OUT(MIN)}$.

### Step-Down Converter: Design Example

As a design example, assume $V_{IN}$ = 12V(nominal), $V_{IN}$ = 22V(max), $V_{OUT}$ = 3.3V and $I_{MAX}$ = 2A. $R_{SENSE}$ can immediately be calculated:

$$R_{SENSE} = 100mV/2A = 0.05\Omega$$

Assume a 10µH inductor. To check the actual value of the ripple current the following equation is used:

$$\Delta I_L = \frac{V_{IN} - V_{OUT}}{(f)(L)}\left(\frac{V_{OUT} + V_D}{V_{IN} + V_D}\right)$$

The highest value of the ripple current occurs at the maximum input voltage:

$$\Delta I_L = \frac{22V - 3.3V}{200kHz(10\mu H)}\left(\frac{3.3V + 0.5V}{22V + 0.5V}\right) = 1.58A_{P-P}$$

The power dissipation on the topside MOSFET can be easily estimated. Choosing a Siliconix Si4412DY results in: $R_{DS(ON)}$ = 0.042Ω, $C_{RSS}$ = 100pF. At maximum input voltage with T(estimated) = 50°C:

$$P_{MAIN} = \frac{3.3V + 0.5V}{22V + 0.5V}(2A)^2\left[1 + (0.005)(50°C - 25°C)\right](0.042\Omega) + 2.5(22V)^{1.85}(2A)(100pF)(200kHz) = 62mW$$

The most stringent requirement for the Schottky diode occurs when $V_{OUT}$ = 0V (i.e. short circuit) at maximum $V_{IN}$. In this case the worst-case dissipation rises to:

$$P_D = I_{SC(AVG)}(V_D)\left(\frac{V_{IN}}{V_{IN} + V_D}\right)$$

With the 0.05Ω sense resistor $I_{SC(AVG)}$ = 2A will result, increasing the 0.5V Schottky diode dissipation to 0.98W.

$C_{IN}$ is chosen for an RMS current rating of at least 1.0A at temperature. $C_{OUT}$ is chosen with an ESR of 0.03Ω for low output ripple. The output ripple in continuous mode will be highest at the maximum input voltage. The output voltage ripple due to ESR is approximately:

$$V_{ORIPPLE} = R_{ESR}(\Delta I_L) = 0.03\Omega\ (1.58A_{P-P}) = 47mV_{P-P}$$

### Step-Down Converter: Duty Cycle Limitations

At high input to output differential voltages the on-time gets very small. Due to internal gate delays and response times of the internal circuitry the minimum recommended on-time is 450ns. Since the LTC1624's frequency is internally set to 200kHz a potential duty cycle limitation exists. When the duty cycle is less than 9%, cycle skipping may occur which increases the inductor ripple current but does not cause $V_{OUT}$ to lose regulation. Avoiding cycle skipping imposes a limit on the input voltage for a given output voltage only when $V_{OUT}$ < 2.2V using 30V MOSFETs. (Remember not to exceed the absolute maximum voltage of 36V.)

$$V_{IN(MAX)} = 11.1V_{OUT} + 5V \qquad \text{For DC} > 9\%$$

### Boost Converter Applications

The LTC1624 is also well-suited to boost converter applications. A boost converter steps up the input voltage to a higher voltage as shown in Figure 6.

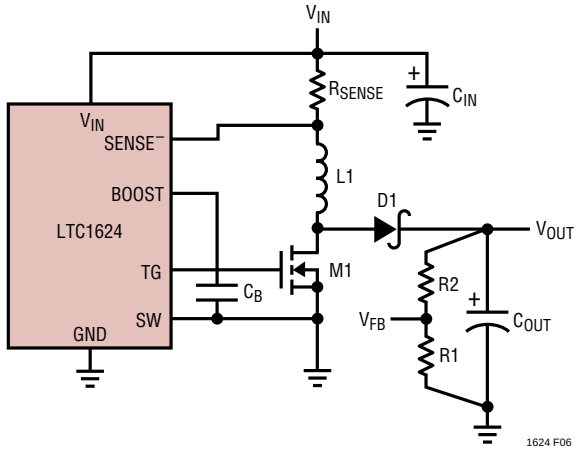


**Figure 6. Boost Converter**

## APPLICATIONS INFORMATION

### Boost Converters: Power MOSFET Selection

One external N-channel power MOSFET must be selected for use with the LTC1624 for the switch. In boost applications the source of the power MOSFET is grounded along with the SW pin. The peak-to-peak gate drive levels are set by the $INTV_{CC}$ voltage. The gate drive voltage is equal to approximately 5V for $V_{IN} > 5.6V$ and a logic level MOSFET can be used. At $V_{IN}$ voltages below 5V the gate drive voltage is equal to $V_{IN} – 0.6V$ and a sublogic level MOSFET should be used.

Selection criteria for the power MOSFET include the "ON" resistance $R_{DS(ON)}$, reverse transfer capacitance $C_{RSS}$, input voltage and maximum output current. When the LTC1624 is operating in continuous mode the duty cycle for the MOSFET is given by:

$$\text{Main Switch Duty Cycle} = 1 - \frac{V_{IN}}{V_{OUT} + V_D}$$

The MOSFET power dissipation at maximum output current is given by:

$$P_{MAIN} = \left(I_{IN(MAX)}\right)^2 \left(1 - \frac{V_{IN(MIN)}}{V_{OUT} + V_D}\right)(1+\delta)R_{DS(ON)} + k\left(V_{OUT}\right)^{1.85}\left(I_{IN(MAX)}\right)\left(C_{RSS}\right)\left(200kHz\right)$$

$$\text{where} \quad I_{IN(MAX)} = I_{OUT(MAX)}\left(\frac{V_{OUT} + V_D}{V_{IN(MIN)}}\right)$$

$\delta$ is the temperature dependency of $R_{DS(ON)}$ and k is a constant inversely related to the gate drive current.

MOSFETs have $I^2R$ losses, plus the $P_{MAIN}$ equation includes an additional term for transition losses that are highest at high output voltages. For $V_{OUT} < 20V$ the high current efficiency generally improves with larger MOSFETs, while for $V_{OUT} > 20V$ the transition losses rapidly increase to the point that the use of a higher $R_{DS(ON)}$ device with lower $C_{RSS}$ actual provides higher efficiency. For additional information refer to Step-Down Converter: Power MOSFET Selection in the Applications Information section.

### Boost Converter: Inductor Selection

For most applications the inductor will fall in the range of 10µH to 100µH. Higher values reduce the input ripple voltage and reduce core loss. Lower inductor values are chosen to reduce physical size.

The input current of the boost converter is calculated at full load current. Peak inductor current can be significantly higher than output current, especially with smaller inductors and lighter loads. The following formula assumes continuous mode operation and calculates maximum peak inductor current at minimum $V_{IN}$:

$$I_{L(PEAK)} = I_{OUT(MAX)}\left(\frac{V_{OUT}}{V_{IN(MIN)}}\right) + \frac{\Delta I_{L(MAX)}}{2}$$

The ripple current in the inductor ($\Delta I_L$) is typically 20% to 30% of the peak inductor current occuring at $V_{IN(MIN)}$ and $I_{OUT(MAX)}$.

$$\Delta I_{L(P-P)} = \frac{V_{IN}\left(V_{OUT} + V_D - V_{IN}\right)}{\left(200kHz\right)\left(L\right)\left(V_{OUT} + V_D\right)}$$

with $\Delta I_{L(MAX)} = \Delta I_{L(P-P)}$ at $V_{IN} = V_{IN(MIN)}$.

Remember boost converters are not short-circuit protected, and that under output short conditions, inductor current is limited only by the available current of the input supply, $I_{OUT(OVERLOAD)}$. Specify the maximum inductor current to safely handle the greater of $I_{L(PEAK)}$ or $I_{OUT(OVERLOAD)}$. Make sure the inductor's saturation current rating (current when inductance begins to fall) exceeds the maximum current rating set by $R_{SENSE}$.

### Boost Converter: $R_{SENSE}$ Selection for Maximum Output Current

$R_{SENSE}$ is chosen based on the required output current. Remember the LTC1624 current comparator has a maximum threshold of 160mV/$R_{SENSE}$. The current comparator threshold sets the peak of the inductor current, yielding a maximum average output current $I_{OUT(MAX)}$ equal to $I_{L(PEAK)}$ less half the peak-to-peak ripple current ($\Delta I_L$), divided by the output-input voltage ratio (see equation for $I_{L(PEAK)}$).

## APPLICATIONS INFORMATION

Allowing a margin for variations in the LTC1624 (without considering variation in $R_{SENSE}$), assuming 30% ripple current in the inductor, yields:

$$R_{SENSE} = \frac{100mV}{I_{OUT(MAX)}}\left(\frac{V_{IN(MIN)}}{V_{OUT} + V_D}\right)$$

### Boost Converter: Output Diode

The output diode conducts current only during the switch off-time. Peak reverse voltage for boost converters is equal to the regulator output voltage. Average forward current in normal operation is equal to output current. Remember boost converters are not short-circuit protected. Check to be sure the diode's current rating exceeds the maximum current set by $R_{SENSE}$. Schottky diodes such as Motorola MBR130LT3 are recommended.

### Boost Converter: Output Capacitors

The output capacitor is normally chosen by its effective series resistance (ESR), because this is what determines output ripple voltage.

Since the output capacitor's ESR affects efficiency, use low ESR capacitors for best performance. Boost regulators have large RMS ripple current in the output capacitor that must be rated to handle the current. The output capacitor ripple current (RMS) is:

$$C_{OUT}\ I_{RIPPLE(RMS)} \approx I_{OUT}\sqrt{\frac{V_{OUT} - V_{IN}}{V_{IN}}}$$

Output ripple is then simply: $V_{OUT} = R_{ESR}\ (\Delta I_{L(RMS)})$.

### Boost Converter: Input Capacitors

The input capacitor of a boost converter is less critical due to the fact that the input current waveform is triangular, and does not contain large square wave currents as found in the output capacitor. The input voltage source impedance determines the size of the capacitor that is typically 10µF to 100µF. A low ESR is recommended although not as critical as the output capacitor and can be on the order of 0.3Ω. Input capacitor ripple current for the LTC1624 used as a boost converter is:

$$C_{IN}\ I_{RIPPLE} \approx \frac{0.3(V_{IN})(V_{OUT} - V_{IN})}{(200kHz)(L)(V_{OUT})}$$

The input capacitor can see a very high surge current when a battery is suddenly connected and solid tantalum capacitors can fail under this condition. Be sure to specify surge tested capacitors.

### Boost Converter: Duty Cycle Limitations

The minimum on-time of 450ns sets a limit on how close $V_{IN}$ can approach $V_{OUT}$ without the output voltage overshooting and tripping the overvoltage comparator. Unless very low values of inductances are used, this should never be a problem. The maximum input voltage in continuous mode is:

$$V_{IN(MAX)} = 0.91V_{OUT} + 0.5V \qquad \text{For DC} = 9\%$$

### SEPIC Converter Applications

The LTC1624 is also well-suited to SEPIC (Single Ended Primary Inductance Converter) converter applications. The SEPIC converter shown in Figure 7 uses two inductors. The advantage of the SEPIC converter is the input voltage may be higher or lower than the output voltage.

The first inductor L1 together with the main N-channel MOSFET switch resemble a boost converter. The second inductor L2 and output diode D1 resemble a flyback or buck-boost converter. The two inductors L1 and L2 can be independent but also can be wound on the same core since

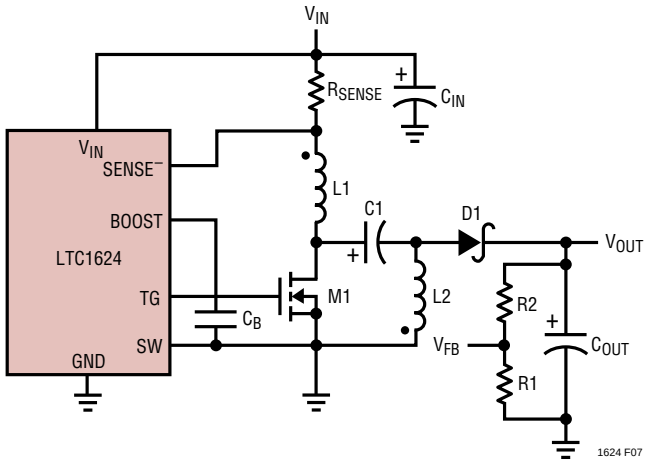


**Figure 7. SEPIC Converter**

## APPLICATIONS INFORMATION

identical voltages are applied to L1 and L2 throughout the switching cycle. By making L1 = L2 and wound on the same core the input ripple is reduced along with cost and size. All SEPIC applications information that follows assumes L1 = L2 = L.

### SEPIC Converter: Power MOSFET Selection

One external N-channel power MOSFET must be selected for use with the LTC1624 for the switch. As in boost applications the source of the power MOSFET is grounded along with the SW pin. The peak-to-peak gate drive levels are set by the $INTV_{CC}$ voltage. This voltage is equal to approximately 5V for $V_{IN} > 5.6V$ and a logic level MOSFET can be used. At $V_{IN}$ voltages below 5V the $INTV_{CC}$ voltage is equal to $V_{IN} – 0.6V$ and a sublogic level MOSFET should be used.

Selection criteria for the power MOSFET include the "ON" resistance $R_{DS(ON)}$, reverse transfer capacitance $C_{RSS}$, input voltage and maximum output current. When the LTC1624 is operating in continuous mode the duty cycle for the MOSFET is given by:

$$\text{Main Switch Duty Cycle} = \frac{V_{OUT} + V_D}{V_{IN} + V_{OUT} + V_D}$$

The MOSFET power dissipation and maximum switch current at maximum output current are given by:

$$P_{MAIN} = \left(I_{SW(MAX)}\right)^2 \left(\frac{V_{OUT} + V_D}{V_{IN(MIN)} + V_{OUT} + V_D}\right)(1+\delta)R_{DS(ON)} + k\left(V_{IN(MIN)} + V_{OUT}\right)^{1.85}\left(I_{SW(MAX)}\right)\left(C_{RSS}\right)(200kHz)$$

$$\text{where} \quad I_{SW(MAX)} = I_{OUT(MAX)}\left(\frac{V_{OUT} + V_D}{V_{IN(MIN)}} + 1\right)$$

$\delta$ is the temperature dependency of $R_{DS(ON)}$ and k is a constant inversely related to the gate drive current. The peak switch current is $I_{SW(MAX)} + \Delta I_L$.

MOSFETs have $I^2R$ losses plus the $P_{MAIN}$ equation includes an additional term for transition losses that are highest at high total input plus output voltages. For $(V_{IN} + V_{OUT}) < 20V$ the high current efficiency generally improves with larger MOSFETs, while for $(V_{IN} + V_{OUT}) > 20V$ the transition losses rapidly increase to the point that the use of a higher $R_{DS(ON)}$ device with lower $C_{RSS}$ actual provides higher efficiency. For additional information refer to the Step-Down Converter: Power MOSFET Selection in the Applications Information section.

### SEPIC Converter: Inductor Selection

For most applications the equal inductor values will fall in the range of 10µH to 100µH. Higher values reduce the input ripple voltage and reduce core loss. Lower inductor values are chosen to reduce physical size and improve transient response.

Like the boost converter the input current of the SEPIC converter is calculated at full load current. Peak inductor current can be significantly higher than output current, especially with smaller inductors and lighter loads. The following formula assumes continuous mode operation and calculates maximum peak inductor current at minimum $V_{IN}$:

$$I_{L1(PEAK)} = I_{OUT(MAX)}\left(\frac{V_{OUT}}{V_{IN(MIN)}}\right) + \frac{\Delta I_{L1}}{2}$$

$$I_{L2(PEAK)} = I_{OUT(MAX)}\left(\frac{V_{IN(MIN)} + V_D}{V_{IN(MIN)}}\right) + \frac{\Delta I_{L2}}{2}$$

The ripple current in the inductor ($\Delta I_L$) is typically 20% to 30% of the peak current occuring at $V_{IN(MIN)}$ and $I_{OUT(MAX)}$, and $\Delta I_{L1} = \Delta I_{L2}$. Maximum $\Delta I_L$ occurs at maximum $V_{IN}$.

$$\Delta I_{L(P-P)} = \frac{(V_{IN})(V_{OUT} + V_D)}{(200kHz)(L)(V_{IN} + V_{OUT} + V_D)}$$

By making L1 = L2 and wound on the same core *the value of inductance in all the above equations are replaced by 2L* due to their mutual inductance. Doing this maintains the same ripple current and inductive energy storage in the inductors. For example a Coiltronix CTX10-4 is a 10µH inductor with two windings. With the windings in parallel

## APPLICATIONS INFORMATION

10µH inductance is obtained with a current rating of 4A. Splitting the two windings creates two 10µH inductors with a current rating of 2A each. Therefore substitute (2)(10µH) = 20µH for L in the equations.

Specify the maximum inductor current to safely handle $I_{L(PEAK)}$. Make sure the inductor's saturation current rating (current when inductance begins to fall) exceeds the maximum current rating set by $R_{SENSE}$.

### SEPIC Converter: $R_{SENSE}$ Selection for Maximum Output Current

$R_{SENSE}$ is chosen based on the required output current. Remember the LTC1624 current comparator has a maximum threshold of 160mV/$R_{SENSE}$. The current comparator threshold sets the peak of the inductor current, yielding a maximum average output current $I_{OUT(MAX)}$ equal to $I_{L1(PEAK)}$ less half the peak-to-peak ripple current, $\Delta I_L$, divided by the output-input voltage ratio (see equation for $I_{L1(PEAK)}$).

Allowing a margin for variations in the LTC1624 (without considering variation in $R_{SENSE}$), assuming 30% ripple current in the inductor, yields:

$$R_{SENSE} = \frac{100mV}{I_{OUT(MAX)}}\left(\frac{V_{IN(MIN)}}{V_{OUT}+V_D}\right)$$

### SEPIC Converter: Output Diode

The output diode conducts current only during the switch off-time. Peak reverse voltage for SEPIC converters is equal to $V_{OUT} + V_{IN}$. Average forward current in normal operation is equal to output current. Peak current is:

$$I_{D1(PEAK)} = I_{OUT(MAX)}\left(\frac{V_{OUT}+V_D}{V_{IN(MIN)}}+1\right)+\Delta I_L$$

Schottky diodes such as MBR130LT3 are recommended.

### SEPIC Converter: Input and Output Capacitors

The output capacitor is normally chosen by its effective series resistance (ESR), because this is what determines output ripple voltage. The input capacitor needs to be sized to handle the ripple current safely.

Since the output capacitor's ESR affects efficiency, use low ESR capacitors for best performance. SEPIC regulators, like step-down regulators, have a triangular current waveform but have maximum ripple at $V_{IN(MAX)}$. The input capacitor ripple current is:

$$I_{RIPPLE(RMS)} = \frac{\Delta I_L}{\sqrt{12}}$$

The output capacitor ripple current is:

$$I_{RIPPLE(RMS)} = I_{OUT}\sqrt{\frac{V_{OUT}}{V_{IN}}}$$

The output capacitor ripple voltage (RMS) is:

$V_{OUT(RIPPLE)} = 2(\Delta I_L)(ESR)$

The input capacitor can see a very high surge current when a battery is suddenly connected, and solid tantalum capacitors can fail under this condition. Be sure to specify surge tested capacitors.

### SEPIC Converter: Coupling Capacitor (C1)

The coupling capacitor C1 in Figure 7 sees a nearly rectangular current waveform. During the off-time the current through C1 is $I_{OUT}(V_{OUT}/V_{IN})$ while approximately $-I_{OUT}$ flows though C1 during the on-time. This current waveform creates a triangular ripple voltage on C1:

$$\Delta V_{C1} = \left(\frac{I_{OUT}}{(200kHz)(C1)}\right)\left(\frac{V_{OUT}}{V_{IN}+V_{OUT}+V_D}\right)$$

The maximum voltage on C1 is then:

$V_{C1(MAX)} = V_{IN} + \Delta V_{C1}/2$ (typically close to $V_{IN(MAX)}$).

The ripple current though C1 is:

$$I_{RIPPLE(C1)} = I_{OUT}\sqrt{\frac{V_{OUT}}{V_{IN}}}$$

The maximum ripple current occurs at $I_{OUT(MAX)}$ and $V_{IN(MIN)}$. The capacitance of C1 should be large enough so

## APPLICATIONS INFORMATION

that the voltage across C1 is constant such that $V_{C1} = V_{IN}$ at full load over the entire $V_{IN}$ range. Assuming the enegry storage in the coupling capacitor C1 must be equal to the enegry stored in L1, the minimum capacitance of C1 is:

$$C1_{(MIN)} = \frac{L1(I_{OUT})^2(V_{OUT})^2}{V_{IN(MIN)}^4}$$

### SEPIC Converter: Duty Cycle Limitations

The minimum on-time of 450ns sets a limit on how high an input-to-output ratio can be tolerated while not skipping cycles. This only impacts designs when very low output voltages ($V_{OUT}$ < 2.5V) are needed. Note that a SEPIC converter would not be appropriate at these low output voltages. The maximum input voltage is (remember not to exceed the absolute maximum limit of 36V):

$V_{IN(MAX)} = 10.1V_{OUT} + 5V$ For DC > 9%

### Positive-to-Negative Converter Applications

The LTC1624 can also be used as a positive-to-negative converter with a grounded inductor shown in Figure 8. Since the LTC1624 requires a positive feedback signal relative to device ground, Pin 4 must be tied to the regulated negative output. A resistive divider from the negative output to ground sets the output voltage. Remember not to exceed maximum $V_{IN}$ ratings $V_{IN} + |V_{OUT}| \leq 36V$.

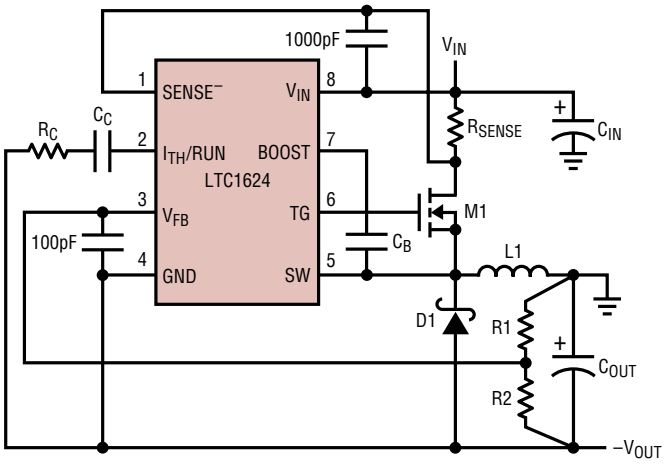


**Figure 8. Positive-to-Negative Converter**

### Positive-to-Negative Converter: Output Voltage Programming

Setting the output voltage for a positive-to-negative converter is different from other architectures since the feedback voltage is referenced to the LTC1624 ground pin and the ground pin is referenced to $-V_{OUT}$. The output voltage is set by a resistive divider according to the following formula:

$$V_{OUT} = 1.19V\left(1+\frac{R1}{R2}\right) \approx -V_{IN}\left(\frac{DC}{1-DC}\right)$$

The external resistive divider is connected to the output as shown in Figure 8.

### Positive-to-Negative Converter: Power MOSFET Selection

One external N-channel power MOSFET must be selected for use with the LTC1624 for the switch. As in step-down applications the source of the power MOSFET is connected to the Schottky diode and inductor. The peak-to-peak gate drive levels are set by the $INTV_{CC}$ voltage. The gate drive voltage is equal to approximately 5V for $V_{IN}$ > 5.6V and a logic level MOSFET can be used. At $V_{IN}$ voltages below 5V the $INTV_{CC}$ voltage is equal to $V_{IN}$ – 0.6V and a sublogic level MOSFET should be used.

Selection criteria for the power MOSFET include the "ON" resistance $R_{DS(ON)}$, reverse transfer capacitance $C_{RSS}$, input voltage and maximum output current. When the LTC1624 is operating in continuous mode the duty cycle for the MOSFET is given by:

$$\text{Main Switch Duty Cycle} = \frac{|V_{OUT}| + V_D}{V_{IN} + |V_{OUT}| + V_D}$$

with $|V_{OUT}|$ being the absolute value of $V_{OUT}$.

The MOSFET power dissipation and maximum switch current are given by:

$$P_{MAIN} = I_{SW(MAX)} \times \left\{ I_{OUT(MAX)}(1+\delta) R_{DS(ON)} + k\left(V_{IN(MAX)} + |V_{OUT}|\right)^{1.85}(C_{RSS})(200kHz)\right\}$$

## APPLICATIONS INFORMATION

where: $I_{SW(MAX)} = I_{OUT(MAX)}\left(\frac{V_{IN} + |V_{OUT}| + V_D}{V_{IN}}\right)$

$\delta$ is the temperature dependency of $R_{DS(ON)}$ and k is a constant inversely related to the gate drive current. The maximum switch current occurs at $V_{IN(MIN)}$ and the peak switch current is $I_{SW(MAX)} + \Delta I_L/2$. The maximum voltage across the switch is $V_{IN(MAX)} + |V_{OUT}|$.

MOSFETs have $I^2R$ losses plus the $P_{MAIN}$ equation includes an additional term for transition losses that are highest at high total input plus output voltages. For $(|V_{OUT}| + V_{IN}) < 20V$ the high current efficiency generally improves with larger MOSFETs, while for $(|V_{OUT}| + V_{IN}) > 20V$ the transition losses rapidly increase to the point that the use of a higher $R_{DS(ON)}$ device with lower $C_{RSS}$ actual provides higher efficiency. For additional information refer to the Step-Down Converter: Power MOSFET Selection in the Applications Information section.

### Positive-to-Negative Converter: Inductor Selection

For most applications the inductor will fall in the range of 10µH to 100µH. Higher values reduce the input and output ripple voltage (although not as much as step-down converters) and also reduce core loss. Lower inductor values are chosen to reduce physical size and improve transient response but do increase output ripple.

Like the boost converter, the input current of the positive-to-negative converter is calculated at full load current. Peak inductor current can be significantly higher than output current, especially with smaller inductors (with high $\Delta I_L$ values). The following formula assumes continuous mode operation and calculates maximum peak inductor current at minimum $V_{IN}$:

$$I_{L(PEAK)} = I_{OUT(MAX)}\left(\frac{V_{IN} + |V_{OUT}| + V_D}{V_{IN}}\right) + \frac{\Delta I_L}{2}$$

The ripple current in the inductor ($\Delta I_L$) is typically 20% to 50% of the peak inductor current occuring at $V_{IN(MIN)}$ and $I_{OUT(MAX)}$ to minimize output ripple. Maximum $\Delta I_L$ occurs at minimum $V_{IN}$.

$$\Delta I_{L(P\text{-}P)} = \frac{(V_{IN})(|V_{OUT}| + V_D)}{(200kHz)(L)(V_{IN} + |V_{OUT}| + V_D)}$$

Specify the maximum inductor current to safely handle $I_{L(PEAK)}$. Make sure the inductor's saturation current rating (current when inductance begins to fall) exceeds the maximum current rating set by $R_{SENSE}$.

### Positive-to-Negative Converter: $R_{SENSE}$ Selection for Maximum Output Current

$R_{SENSE}$ is chosen based on the required output current. Remember the LTC1624 current comparator has a maximum threshold of $160mV/R_{SENSE}$. The current comparator threshold sets the peak of the inductor current, yielding a maximum average output current $I_{OUT(MAX)}$ equal to $I_{L(PEAK)}$ less half the peak-to-peak ripple current with the remainder divided by the duty cycle.

Allowing a margin for variations in the LTC1624 (without considering variation in $R_{SENSE}$) and assuming 30% ripple current in the inductor, yields:

$$R_{SENSE} = \frac{100mV}{I_{OUT(MAX)}}\left(\frac{V_{IN(MIN)}}{V_{IN(MIN)} + |V_{OUT}| + V_D}\right)$$

### Positive-to-Negative Converter: Output Diode

The output diode conducts current only during the switch off-time. Peak reverse voltage for positive-to-negative converters is equal to $|V_{OUT}| + V_{IN}$. Average forward current in normal operation is equal to $I_{D(PEAK)} - \Delta I_L/2$. Peak diode current (occurring at $V_{IN(MIN)}$) is:

$$I_{D(PEAK)} = I_{OUT(MAX)}\left(\frac{(|V_{OUT}| + V_D)}{V_{IN}} + 1\right) + \frac{\Delta I_L}{2}$$

### Positive-to-Negative Converter: Input and Output Capacitors

The output capacitor is normally chosen by its effective series resistance (ESR), because this is what determines output ripple voltage. Both input and output capacitors need to be sized to handle the ripple current safely.

## APPLICATIONS INFORMATION

Positive-to-negative converters have high ripple current in both the input and output capacitors. For long capacitor lifetime, the RMS value of this current must be less than the high frequency ripple rating of the capacitor.

The following formula gives an approximate value for RMS ripple current. This formula assumes continuous mode and low current ripple. Small inductors will give somewhat higher ripple current, especially in discontinuous mode. For the exact formulas refer to Application Note 44, pages 28 to 30. The input and output capacitor ripple current (occurring at $V_{IN(MIN)}$) is:

$$\text{Capacitor } I_{RMS} = (ff)(I_{OUT})\sqrt{\frac{|V_{OUT}|}{V_{IN}}}$$

ff = Fudge factor (1.2 to 2.0)

The output peak-to-peak ripple voltage is:

$$V_{OUT(P-P)} = R_{ESR}\,(I_{D(MAX)})$$

The input capacitor can also see a very high surge current when a battery is suddenly connected, and solid tantalum capacitors can fail under this condition. Be sure to specify surge tested capacitors.

### Positive-to-Negative Converter: Duty Cycle Limitations

The minimum on-time of 450ns sets a limit on how high of input-to-output ratio can be tolerated while not skipping cycles. This only impacts designs when very low output voltages ($|V_{OUT}| < 2.5V$) are needed. The maximum input voltage is:

$$V_{IN(MAX)} < 10.1V_{OUT} + 5V \qquad \text{For DC} > 9\%$$

$$V_{IN(MAX)} < 36V - |V_{OUT}| \quad \text{For absolute maximum ratings}$$

### Positive-to-Negative Converter: Shutdown Considerations

Since the ground pin on the LTC1624 is referenced to $-V_{OUT}$, additional circuitry is needed to put the LTC1624 into shutdown. Shutdown is enabled by pulling the $I_{TH}$/RUN pin below 0.8V relative to the LTC1624 ground pin. With the LTC1624 ground pin referenced to $-V_{OUT}$, the nonimal range on the $I_{TH}$/RUN pin is $-V_{OUT}$ (in shutdown) to $(-V_{OUT} + 2.4V)$(at Max $I_{OUT}$). Referring to Figure 15, M2, M3 and R3 provide a level shift from typical TTL levels to the LTC1624 operating as positive-to-negative converter. MOSFET M3 supplies gate drive to M2 during shutdown, while M2 pulls the $I_{TH/RUN}$ pin voltage to $-V_{OUT}$, shutting down the LTC1624.

### Step-Down Converters: PC Board Layout Checklist

When laying out the printed circuit board, the following checklist should be used to ensure proper operation of the LTC1624. These items are also illustrated graphically in the layout diagram of Figure 9. Check the following in your layout:

1. Are the signal and power grounds segregated? The LTC1624 ground (Pin 4) must return to the (–) plate of $C_{OUT}$.
2. Does the $V_{FB}$ (Pin 3) connect directly to the feedback resistors? The resistive divider R1, R2 must be connected between the (+) plate of $C_{OUT}$ and signal ground. The 100pF capacitor should be as close as possible to the LTC1624.
3. Does the $V_{IN}$ lead connect to the input voltage at the same point as $R_{SENSE}$ and are the $SENSE^-$ and $V_{IN}$ leads routed together with minimum PC trace spacing? The filter capacitor between $V_{IN}$ and $SENSE^-$ should be as close as possible to the LTC1624.
4. Does the (+) plate of $C_{IN}$ connect to $R_{SENSE}$ as closely as possible? This capacitor provides the AC current to the MOSFET(s). Also, does $C_{IN}$ connect as close as possible to the $V_{IN}$ and ground pin of the LTC1624? This capacitor also supplies the energy required to recharge the bootstrap capacitor. Adequate input decoupling is critical for proper operation.
5. Keep the switch node SW away from sensitive small-signal nodes. Ideally, M1, L1 and D1 should be connected as closely as possible at the switch node.

## TYPICAL APPLICATIONS

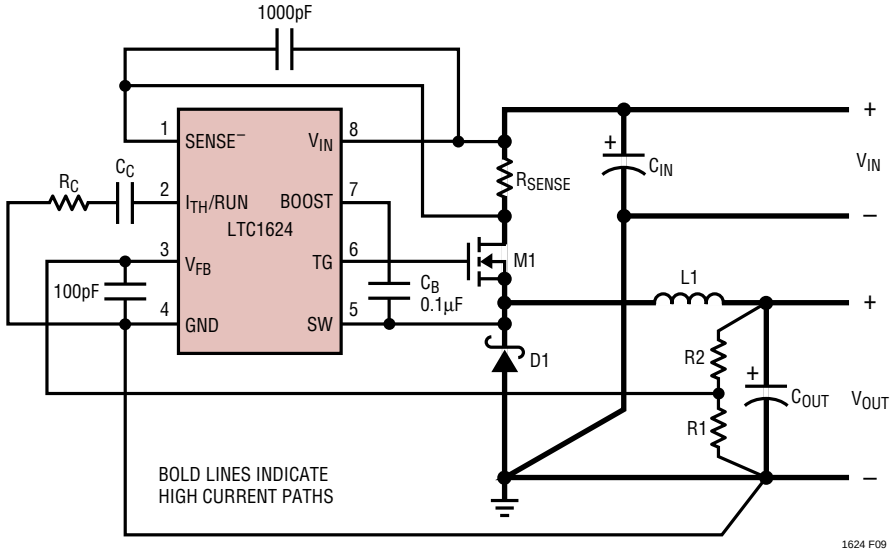


**Figure 9. LTC1624 Layout Diagram (See Board Layout Checklist)**

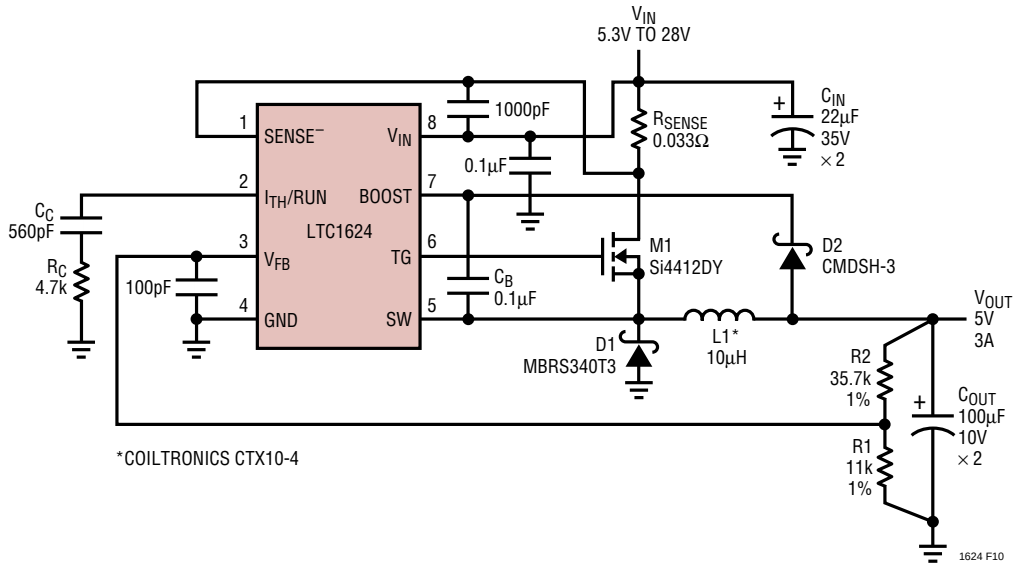


**Figure 10. 5V/3A Converter with Output Derived Boost Voltage**

## TYPICAL APPLICATIONS

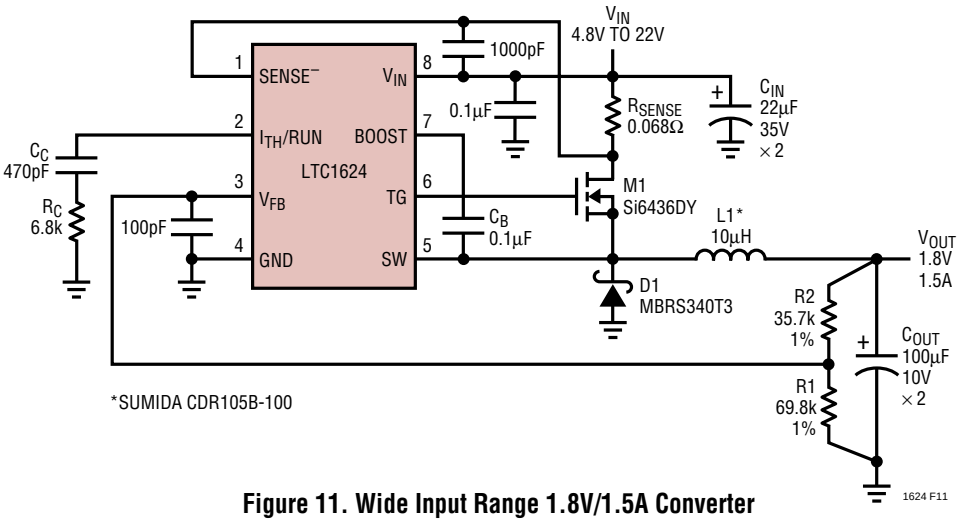


**Figure 11. Wide Input Range 1.8V/1.5A Converter**

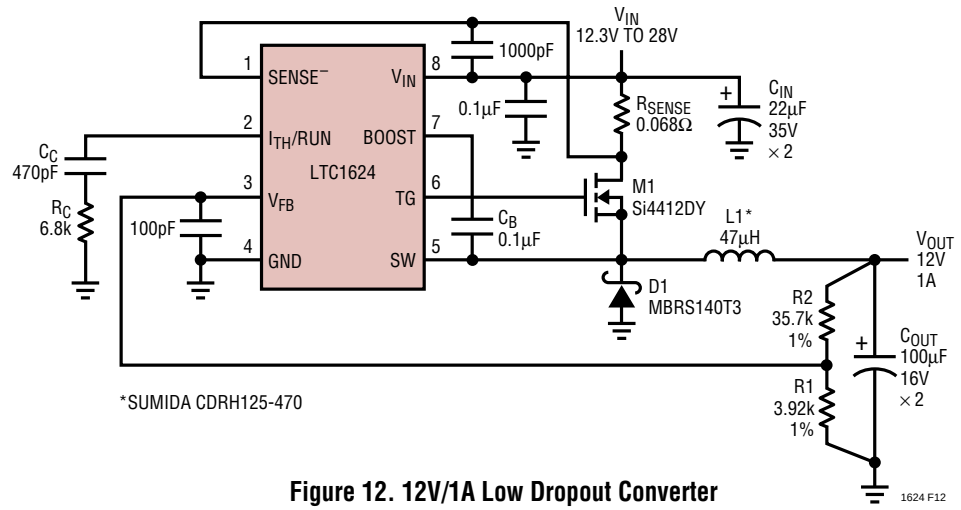


**Figure 12. 12V/1A Low Dropout Converter**

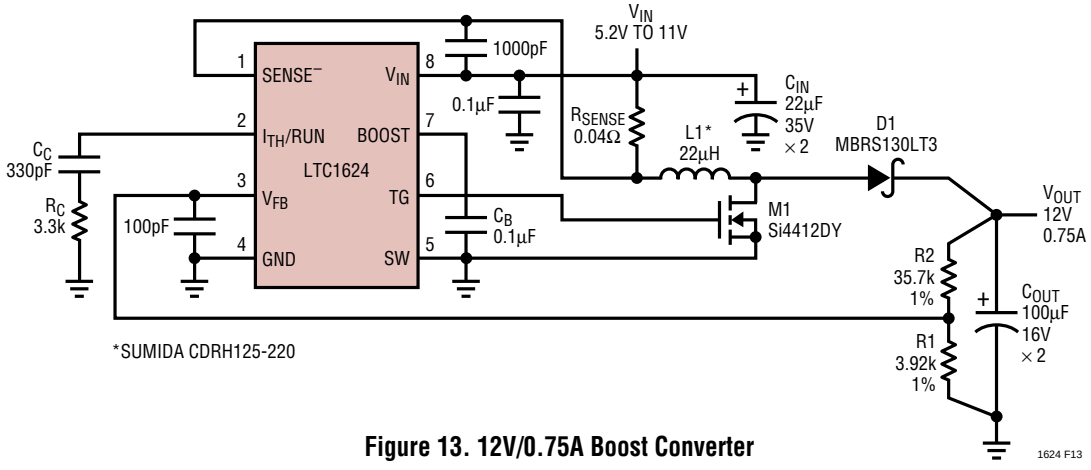


**Figure 13. 12V/0.75A Boost Converter**

## TYPICAL APPLICATIONS

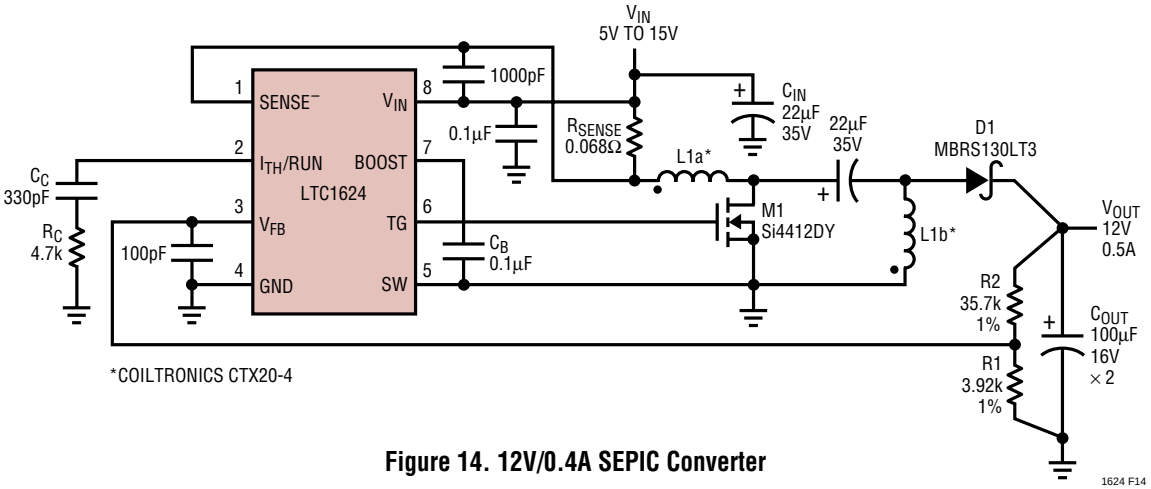


**Figure 14. 12V/0.4A SEPIC Converter**

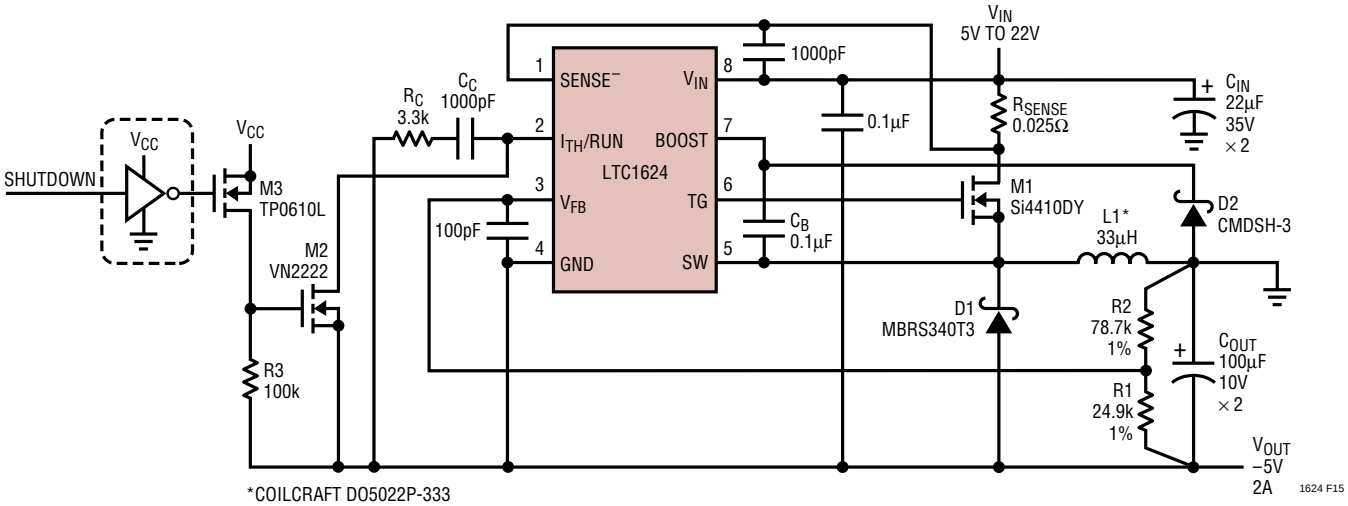


**Figure 15. Inverting –5V/2A Converter**

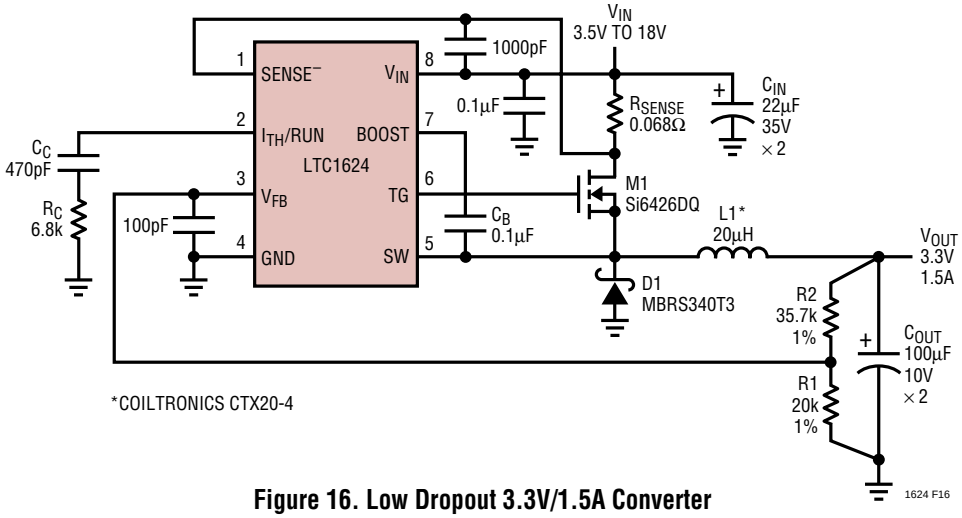


**Figure 16. Low Dropout 3.3V/1.5A Converter**

## TYPICAL APPLICATIONS

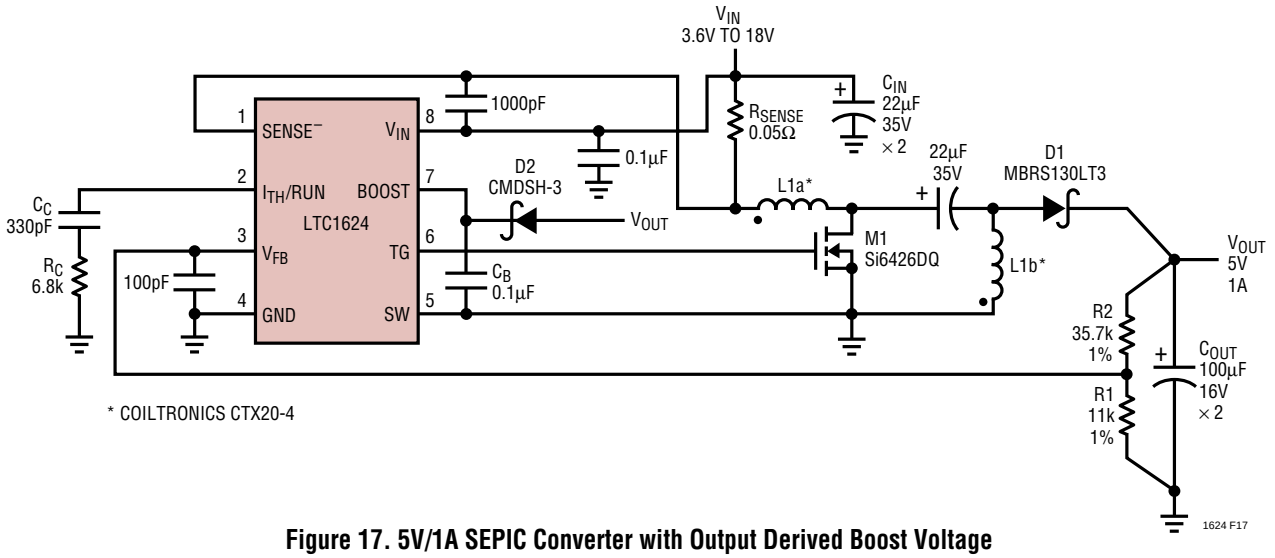


**Figure 17. 5V/1A SEPIC Converter with Output Derived Boost Voltage**

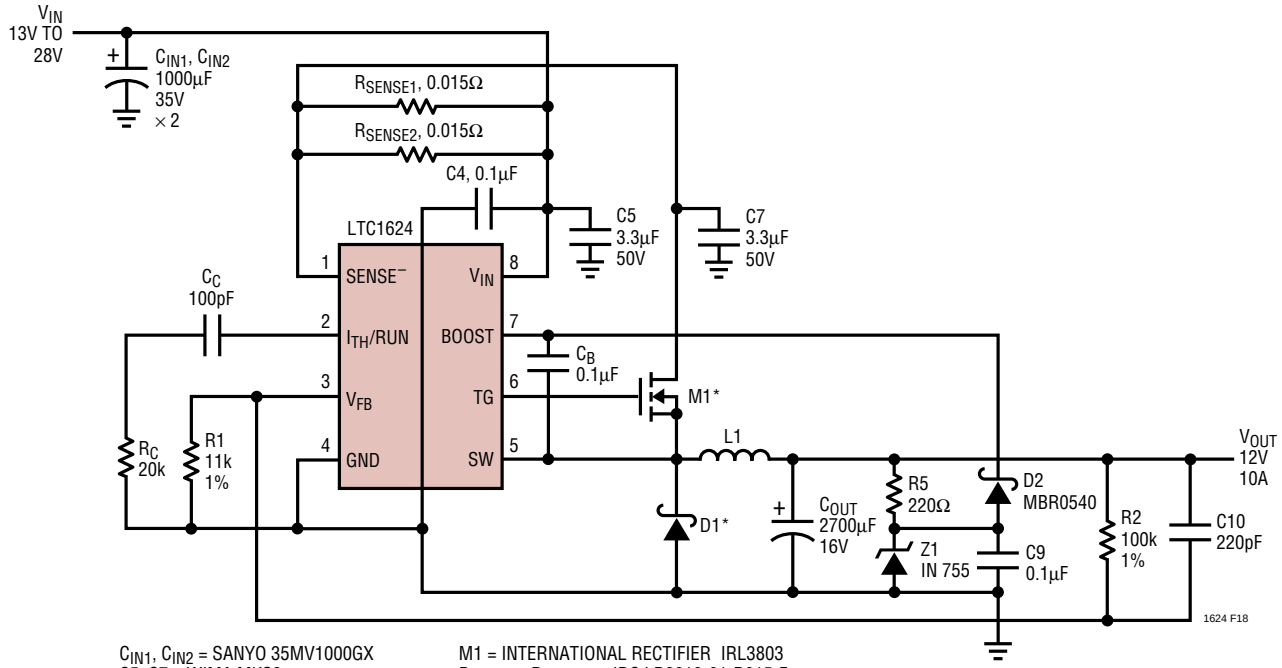


**Figure 18. 24V to 12V/10A Buck Converter with Output-Derived Boost Voltage**

## TYPICAL APPLICATIONS

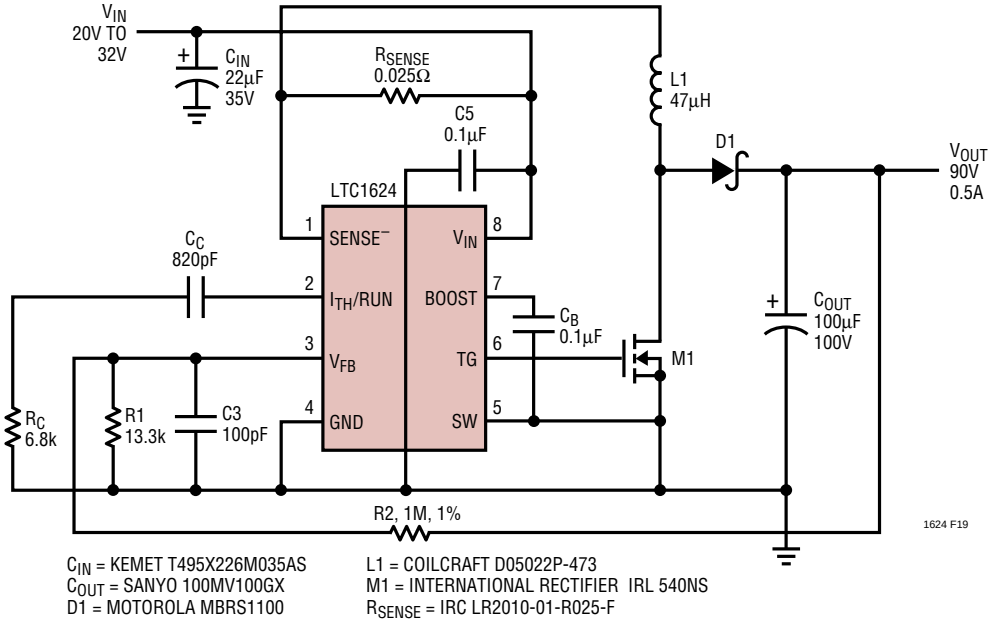


**Figure 19. 24V to 90V at 0.5A Boost Converter**

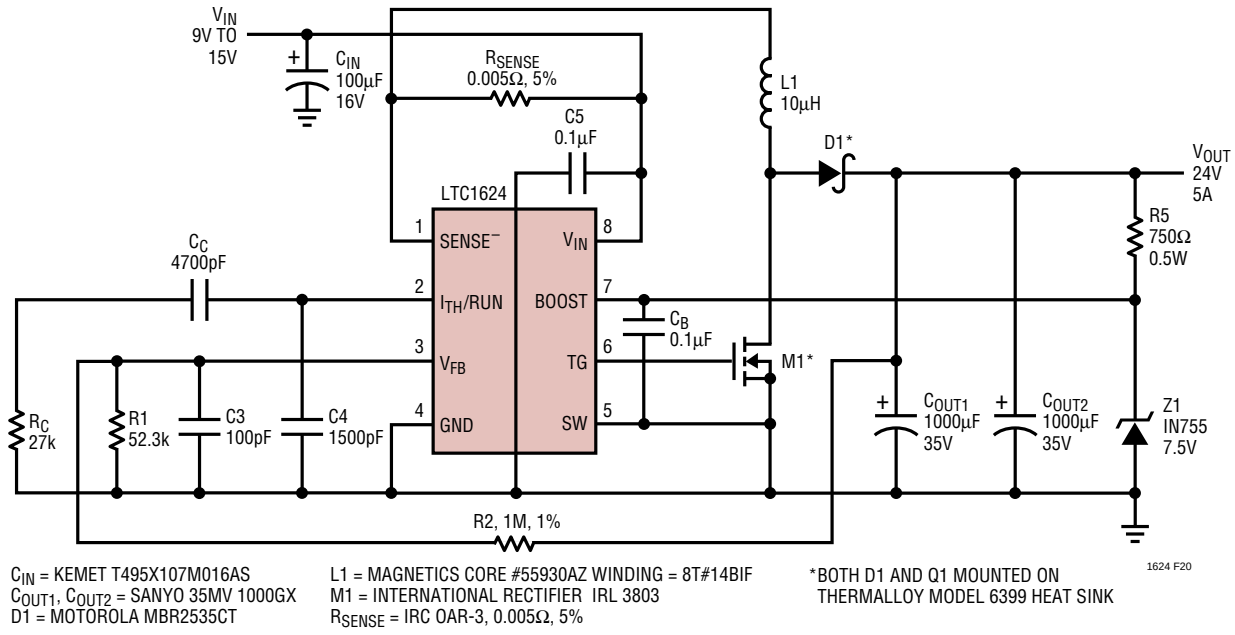


**Figure 20. 12V to 24V/5A Boost Converter**

## TYPICAL APPLICATIONS

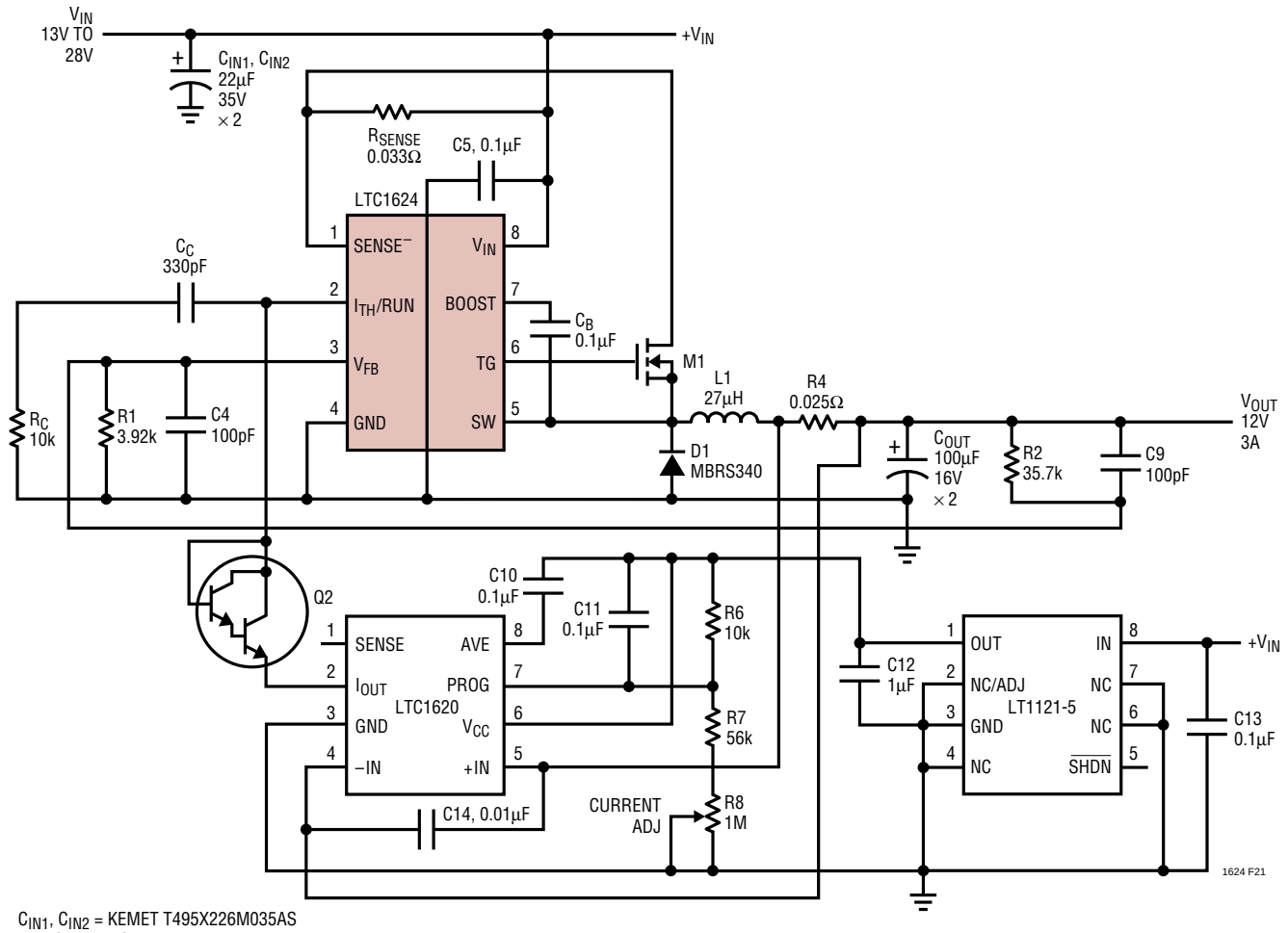


CIN1, CIN2 = KEMET T495X226M035AS
L1 = SUMIDA CDRH127-270
RSENSE = IRC LR2010-01-R033-F
R4 = IRC LR2010-01-R025-F
M1 = SILICONIX Si4412DY
Q2 = MOTOROLA MMBT A14

**Figure 21. 12V/3A Adjustable Current Power Supply for Battery Charger or Current Source Applications**

## TYPICAL APPLICATIONS

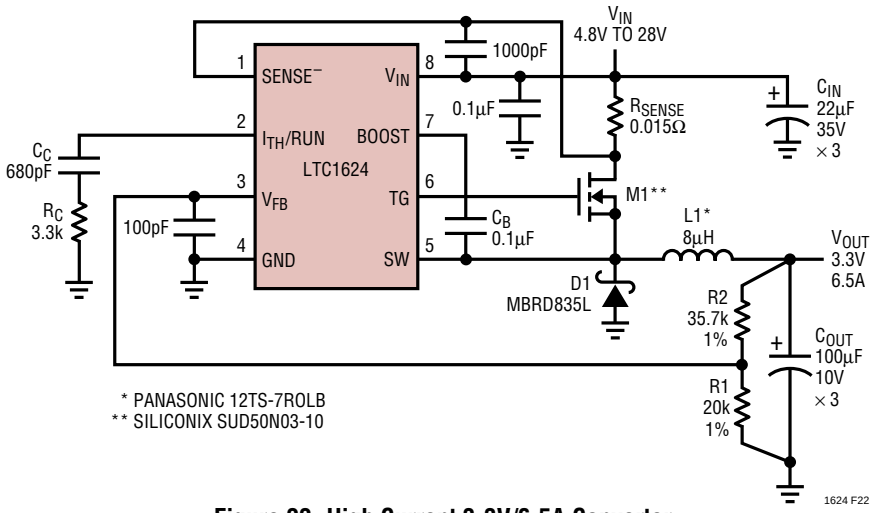


**Figure 22. High Current 3.3V/6.5A Converter**

## PACKAGE DESCRIPTION

**Dimensions in inches (millimeters) unless otherwise noted.**

**S8 Package**
**8-Lead Plastic Small Outline (Narrow 0.150)**
(LTC DWG # 05-08-1610)

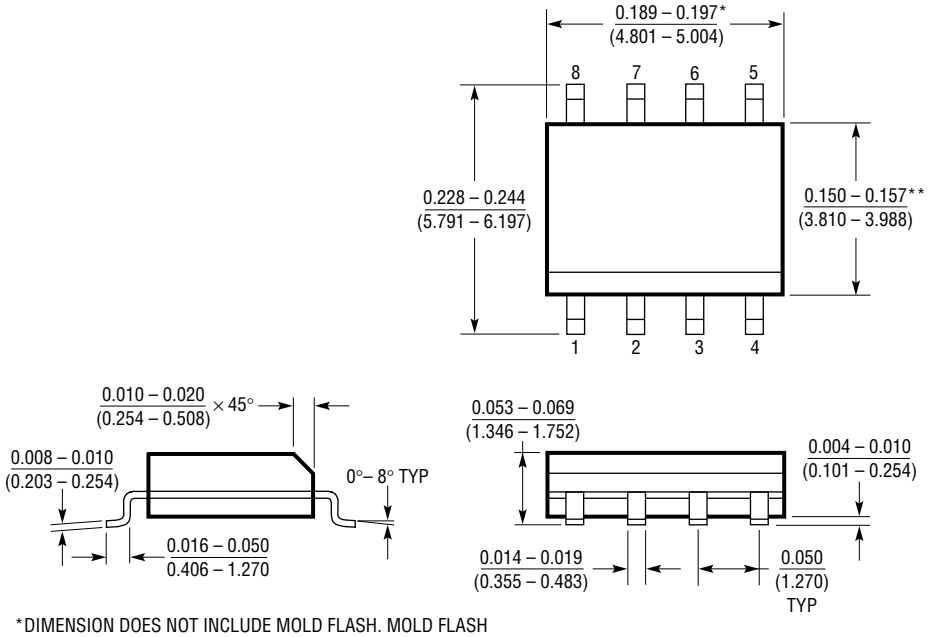


*DIMENSION DOES NOT INCLUDE MOLD FLASH. MOLD FLASH SHALL NOT EXCEED 0.006" (0.152mm) PER SIDE

**DIMENSION DOES NOT INCLUDE INTERLEAD FLASH. INTERLEAD FLASH SHALL NOT EXCEED 0.010" (0.254mm) PER SIDE

S08 0996

Information furnished by Linear Technology Corporation is believed to be accurate and reliable. However, no responsibility is assumed for its use. Linear Technology Corporation makes no representation that the interconnection of its circuits as described herein will not infringe on existing patent rights.

## TYPICAL APPLICATION

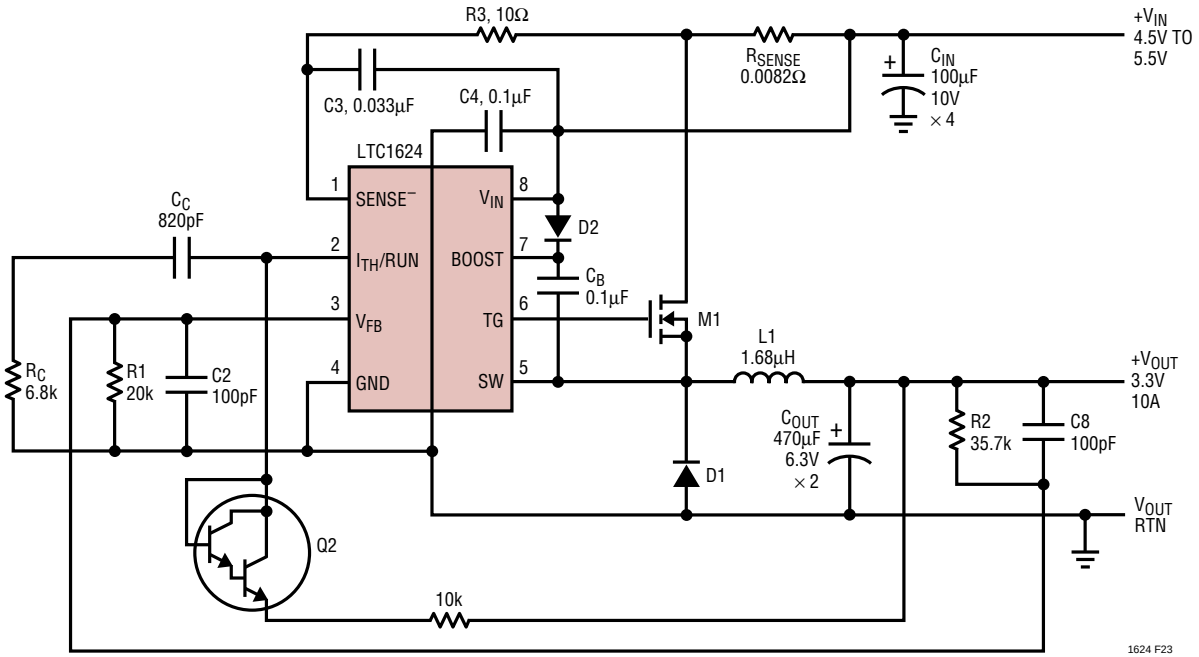


$C_{IN}$ (× 4) = KEMET T495D107M010AS
$C_{OUT}$ (× 2) = AVX TPSV477M006R0055
D1 = MOTOROLA MBRB2515L
D2 = MOTOROLA MBR0520
L1 = PULSE ENGINEERING PE53691
M1 = INTERNATIONAL RECTIFIER IRL3803S
Q2 = MOTOROLA MMBTA14LT1
$R_{SENSE}$ = IRC OAR3-R0082

**Figure 23. 5V to 3.3V/10A Converter (Surface Mount)**

## RELATED PARTS

| PART NUMBER | DESCRIPTION | COMMENTS |
|---|---|---|
| LTC1147 | High Efficiency Step-Down Controller | 100% DC, Burst Mode Operation, 8-Pin SO and PDIP |
| LTC1148HV/LTC1148 | High Efficiency Synchronous Step-Down Controllers | 100% DC, Burst Mode Operation, $V_{IN}$ < 20V |
| LTC1149 | High Efficiency Synchronous Step-Down Controller | 100% DC,Std Threshold MOSFETs, $V_{IN}$ < 48V |
| LTC1159 | High Efficiency Synchronous Step-Down Controller | 100% DC, Logic Level MOSFETs, $V_{IN}$ < 40V |
| LTC1174 | Monolithic 0.6A Step-Down Switching Regulator | 100% DC, Burst Mode Operation, 8-Pin SO |
| LTC1265 | 1.2A Monolithic High Efficiency Step-Down Switching Regulator | 100% DC, Burst Mode Operation, 14-Pin SO |
| LTC1266 | High Efficiency Synchronous Step-Down Controller, N-Channel Drive | 100% DC, Burst Mode Operation, $V_{IN}$ < 20V |
| LT®1375/LT1376 | 1.5A, 500kHz Step-Down Switching Regulators | High Frequency |
| LTC1433/LTC1434 | Monolithic 0.45A Low Noise Current Mode Step-Down Switching Regulators | 16- and 20-Pin Narrow SSOP |
| LTC1435 | High Efficiency Low Noise Synchronous Step-Down Controller, N-Channel Drive | Burst Mode Operation, 16-Pin Narrow SO |
| LTC1436/LTC1436-PLL | High Efficiency Low Noise Synchronous Step-Down Controllers, N-Channel Drive | Adaptive Power™ Mode, 20- and 24-Pin SSOP |
| LTC1474/LTC1475 | Ultralow Quiesent Current Step-Down Monolithic Switching Regulators | 100% DC, 8-Pin MSOP, $V_{IN}$ < 20V |

Adaptive Power is a trademark of Linear Technology Corporation.


Linear Technology Corporation
1630 McCarthy Blvd., Milpitas, CA 95035-7417• (408)432-1900
408) 434-0507•TELEX: 499-3977• www.linear-tech.com
1624f LT/TP 0198 4K • PRINTED IN USA
© LINEAR TECHNOLOGY CORPORATION 1997