MAX14857/MAX14859

5kV$_{RMS}$ Isolated 500kbps/25Mbps Full-Duplex RS-485/RS-422 Transceivers with ±35kV ESD Protection and Integrated Transformer Driver

General Description

The MAX14857/MAX14859 isolated RS-485/RS-422 transceivers provide 5000V$_{RMS}$ (60s) of galvanic isolation between the cable-side (RS-485/RS-422 driver/receiver-side) and the UART-side of the device. Isolation improves communication by breaking ground loops and reduces noise when there are large differences in ground potential between ports. These devices allow for robust communication up to 500kbps (MAX14857) or 25Mbps (MAX14859).

The devices include an integrated 450kHz transformer driver for power transfer to the cable-side of the transceiver using an external transformer. An integrated LDO provides a simple and space-efficient architecture for providing power to the cable-side of the IC.

The devices include one drive channel and one receive channel. The receiver is ¼-unit load, allowing up to 128 transceivers on a common bus.

Integrated true fail-safe circuitry ensures a logic-high on the receiver output when inputs are shorted or open. Undervoltage lockout disables the driver when cable-side or UART-side power supplies are below functional levels.

The driver outputs and receiver inputs are protected from ±35kV electrostatic discharge (ESD) to GNDB on the cable-side, as specified by the Human Body Model (HBM).

The MAX14857/MAX14859 are available in a wide body 16-pin SOIC package and operate over the -40°C to +105°C temperature range.

Applications

- Industrial Automation Equipment
- Programmable Logic Controllers
- HVAC
- Power Meters

Safety Regulatory Approvals

- UL According to UL1577
- cUL According to CSA Bulletin 5A

Ordering Information appears at end of data sheet.

Benefits and Features

- High Integration Simplifies Designs
  - Integrated LDO for Cable-Side Power
  - Integrated Transformer Driver for Power Transfer to Cable-Side Has Up to 80% Efficiency at 150mA Load
- High-Performance Transceiver Enables Flexible Designs
  - Compliant with RS-485 EIA/TIA-485 Standard
  - 500kbps (MAX14857)/25Mbps (MAX14859) Maximum Data Rate
  - Up to 128 Devices on the Bus
- Integrated Protection for Robust Communication
  - ±35kV ESD (HBM) on Driver Outputs/Receiver Inputs
  - 5kV$_{RMS}$ Withstand Isolation Voltage for 60 Seconds (V$_{ISO}$)
  - 1200V$_{PEAK}$ Maximum Repetitive Peak Isolation Voltage (V$_{IORM}$)
  - 848V$_{RMS}$ Maximum Working Isolation Voltage (V$_{IOWM}$)
  - >30 Years Lifetime at Rated Working Voltage
  - Withstands ±10kV Surge per IEC 61000-4-5
  - Thermal Shutdown

Functional Diagram

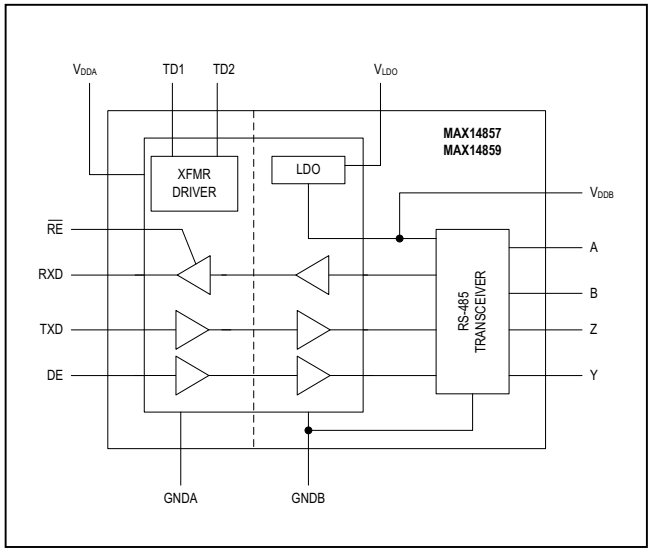

Absolute Maximum Ratings

V_{DDA} to GNDA .....-0.3V to +6V
V_{DDB} to GNDB .....-0.3V to +6V
V_{LDO} to GNDB .....-0.3V to +16V
TD1, TD2 to GNDA .....-0.3V to +12V
TXD, DE, $\overline{RE}$ to GNDA .....-0.3V to +6V
RXD to GNDA .....-0.3V to (V_{DDA} + 0.3V)
A, B, Y, Z to GNDB.....-8V to +13V
TD1, TD2 Continuous Current 1.4A
Short-Circuit Duration (RXD to GNDA, A, B, Y, Z, V_{DDB} to GNDB) .....Continuous

Continuous Power Dissipation (T_A = +70°C)
16-pin Wide SOIC
(derate 14.1mW/°C above +70°C) 1126.8mW
Operating Temperature Range..... -40°C to +105°C
Junction Temperature.....+150°C
Storage Temperature Range..... -65°C to +150°C
Lead Temperature (soldering, 10s) .....+300°C
Soldering Temperature (reflow).....+260°C

Stresses beyond those listed under "Absolute Maximum Ratings" may cause permanent damage to the device. These are stress ratings only, and functional operation of the device at these or any other conditions beyond those indicated in the operational sections of the specifications is not implied. Exposure to absolute maximum rating conditions for extended periods may affect device reliability.

Package Thermal Characteristics (Note 1)

Junction-to-Ambient Thermal Resistance (θ_{JA}).....71°C/W

Junction-to-Case Thermal Resistance (θ_{JC}).....23°C/W

Note 1: Package thermal resistances were obtained using the method described in JEDEC specification JESD51-7, using a four-layer board. For detailed information on package thermal considerations, refer to **www.maximintegrated.com/thermal-tutorial**.

DC Electrical Characteristics

(V_{DDA} - V_{GNDA} = 3.0V to 5.5V, V_{DDB} - V_{GNDB} = 3.0V to 5.5V, T_A = T_{MIN} to T_{MAX}, unless otherwise noted. Typical values are at V_{DDA} - V_{GNDA} = 3.3V, V_{DDB} - V_{GNDB} = 3.3V, V_{GNDA} = V_{GNDB}, and T_A = +25°C.) (Note 2, 3)

PARAMETER	SYMBOL	CONDITIONS	MIN	TYP	MAX	UNITS
POWER						
Supply Voltage	V_{DDA}		3.0		5.5	V
	V_{DDB}		3.0		5.5	
Supply Current	I_{DDA}	V_{DDA} = 5V, DE = high, $\overline{RE}$ = TXD = low, RXD unconnected, no bus load, TD1/TD2 unconnected		4.7	7.7	mA
	I_{DDB}	DE = high, $\overline{RE}$ = TXD = low, RXD unconnected, no bus load, V_{DDB} = 3.3V		7.4	12.5	
Undervoltage Lockout Threshold	V_{UVLOA}	$\overline{RE}$, RXD, DE, TXD, V_{DDA} rising	1.50	1.58	1.65	V
		TD1/TD2 driver, V_{DDA} rising	2.55	2.7	2.85	
	V_{UVLOB}	V_{DDB} rising	2.55	2.7	2.85	
Undervoltage Lockout Threshold Hysteresis	$V_{UVHYSTA}$	$\overline{RE}$, RXD, DE, TXD		50		mV
		TD1/TD2 driver		200		
	$V_{UVHYSTB}$			200		
TRANSFORMER DRIVER						
Output Resistance	R_O	TD1/TD2 = low, I_{OUT} = 300mA		0.6	1.5	Ω
TD1, TD2 Current Limit	I_{LIM}	4.5V ≤ V_{DDA} ≤ 5.5V	540	785	1300	mA
		3.0V ≤ V_{DDA} ≤ 3.6V	485	730	1170	
Switching Frequency	f_{SW}		350	450	550	kHz
Duty Cycle	D			50		%
Crossover Dead Time	t_{DEAD}			50		ns

DC Electrical Characteristics (continued)

(V_{DDA} - V_{GNDA} = 3.0V to 5.5V, V_{DDB} - V_{GNDB} = 3.0V to 5.5V, T_A = T_{MIN} to T_{MAX}, unless otherwise noted. Typical values are at V_{DDA} - V_{GNDA} = 3.3V, V_{DDB} - V_{GNDB} = 3.3V, V_{GNDA} = V_{GNDB}, and T_A = +25°C.) (Note 2, 3)

PARAMETER	SYMBOL	CONDITIONS	MIN	TYP	MAX	UNITS
LDO						
LDO Supply Voltage	V_{LDO}	Relative to GNDB, LDO is on (Note 4)	3.18		14	V
LDO Supply Current	I_{LDO}	DE = high, $\overline{RE}$ = TXD = low, no bus load, V_{LDO} = 5.5V		7.5	12.9	mA
LDO Output Voltage	V_{DDB}		3.0	3.3	3.6	V
LDO Current Limit				300		mA
Load Regulation		V_{LDO} = 3.3V, I_{LOAD} = 20mA to 40mA		0.19	1.7	mV/mA
Line Regulation		V_{LDO} = 4V to 9.5V, I_{LOAD} = 20mA		0.12	1.8	mV/V
Dropout Voltage		V_{LDO} = 3.18V, I_{DDB} = 120mA		100	180	mV
Load Capacitance		Nominal value (Note 7)	1		10	µF
LOGIC INTERFACE (TXD, RXD, DE, $\overline{RE}$)						
Input High Voltage	V_{IH}	$\overline{RE}$, TXD, DE to GNDA	0.7 x V_{DDA}			V
Input Low Voltage	V_{IL}	$\overline{RE}$, TXD, DE to GNDA			0.8	V
Input Hysteresis	V_{HYS}	$\overline{RE}$, TXD, DE to GNDA		220		mV
Input Capacitance	C_{IN}	$\overline{RE}$, TXD, DE, f = 1MHz		2		pF
Input Pullup Current	I_{PU}	TXD	-10	-4.5	-1.5	µA
Input Pulldown Current	I_{PD}	DE, $\overline{RE}$	1.5	4.5	10	µA
Output Voltage High	V_{OH}	RXD to GNDA, I_{OUT} = -4mA	V_{DDA} -0.4			V
Output Voltage Low	V_{OL}	RXD to GNDA, I_{OUT} = 4mA			0.4	V
Short Circuit Output Pullup Current	I_{SH_PU}	0V ≤ V_{RXD} ≤ V_{DDA}, V_A - V_B > -10mV, $\overline{RE}$ = low	-42			mA
Short Circuit Output Pulldown Current	I_{SH_PD}	0V ≤ V_{RXD} ≤ V_{DDA}, V_A - V_B < -200mV, $\overline{RE}$ = low			+40	mA
Tri-State Output Current	I_{OZ}	0V ≤ V_{RXD} ≤ V_{DDA}, $\overline{RE}$ = high	-1		+1	µA
DRIVER						
Differential Driver Output	$\|V_{OD}\|$	R_L = 54Ω, TXD = high or low, DE = high, Figure 1a	1.5			V
		R_L = 100Ω, TXD = high or low, DE = high, Figure 1a	2.0			
		-7V ≤V_{CM} ≤ +12V, Figure 1b	1.5		5	
Change in Magnitude of Differential Driver Output Voltage	ΔV_{OD}	R_L = 100Ω or 54Ω, Figure 1a (Note 5)			0.2	V
Driver Common Mode Output Voltage	V_{OC}	R_L = 100Ω or 54Ω, Figure 1a (Note 5)		V_{DDB}/2	3	V

DC Electrical Characteristics (continued)

(V_{DDA} - V_{GNDA} = 3.0V to 5.5V, V_{DDB} - V_{GNDB} = 3.0V to 5.5V, T_A = T_{MIN} to T_{MAX}, unless otherwise noted. Typical values are at V_{DDA} - V_{GNDA} = 3.3V, V_{DDB} - V_{GNDB} = 3.3V, V_{GNDA} = V_{GNDB}, and T_A = +25°C.) (Note 2, 3)

PARAMETER	SYMBOL	CONDITIONS		MIN	TYP	MAX	UNITS
Change in Magnitude of Common-Mode Voltage	ΔV_{OC}	R_L = 100Ω or 54Ω, Figure 1a (Note 5)				0.2	V
Driver Short-Circuit Output Current	I_{OSD}	GNDB ≤ V_{OUT} ≤ +12V, output low (Note 6)		+30		+250	mA
		-7V ≤ V_{OUT} ≤ V_{DDB}, output high (Note 6)		-250		-30	
Single-Ended Driver Output Voltage High	V_{OH}	Y and Z outputs, $I_{Y,Z}$ = -20mA		2.2			V
Single-Ended Driver Output Voltage Low	V_{OL}	Y and Z outputs, $I_{Y,Z}$ = +20mA				0.8	V
Differential Driver Output Capacitance	C_{OD}	DE = $\overline{RE}$ = high, f = 4MHz			12		pF
RECEIVER							
Input Current (A and B)	I_A, I_B	DE = GNDA, V_{DDB} = V_{GNDB} or 3.6V	V_{IN} = +12V			+250	μA
			V_{IN} = -7V	-200			
Receiver Differential Threshold Voltage	V_{TH}	-7V ≤ V_{CM} ≤ +12V		-200	-120	-10	mV
Receiver Input Hysteresis	ΔV_{TH}	V_{CM} = 0V			20		mV
Receiver Input Resistance	R_{IN}	-7V ≤ V_{CM} ≤ +12V, DE = low		48			kΩ
Differential Input Capacitance	$C_{A,B}$	Measured between A and B, DE = $\overline{RE}$ = GNDA at 2MHz			12		pF
PROTECTION							
Thermal-Shutdown Threshold	T_{SHDN}	Temperature rising			+160		°C
Thermal-Shutdown Hysteresis	T_{HYST}				15		°C
ESD Protection (A, B, Y, Z Pins to GNDB)		Human Body Model			±35		kV
		IEC 61000-4-2 Air-Gap Discharge			±18		
		IEC 61000-4-2- Contact Discharge			±8		
ESD Protection (All Other Pins)		Human Body Model			±4		kV

Switching Electrical Characteristics (MAX14857)

(V_{DDA} - V_{GNDA} = 3.0V to 5.5V, V_{DDB} - V_{GNDB} = 3.0V to 5.5V, T_A = T_{MIN} to T_{MAX}, unless otherwise noted. Typical values are at V_{DDA} - V_{GNDA} = 3.3V, V_{DDB} - V_{GNDB} = 3.3V, V_{GNDA} = V_{GNDB}, and T_A = +25°C.) (Note 7)

PARAMETER	SYMBOL	CONDITIONS	MIN	TYP	MAX	UNITS
DYNAMIC						
Common-Mode Transient Immunity	CMTI	(Note 8)		35		kV/µs
Glitch Rejection		TXD, DE, RXD	10	17	29	ns
DRIVER						
Driver Propagation Delay	t_{DPLH}, t_{DPHL}	R_L = 54Ω, C_L = 50pF, Figure 2 and Figure 3			1040	ns
Differential Driver Output Skew $\lvert t_{DPLH} - t_{DPHL} \rvert$	t_{DSKEW}	R_L = 54Ω, C_L = 50pF, Figure 2 and Figure 3			144	ns
Driver Differential Output Rise or Fall Time	t_{LH}, t_{HL}	R_L = 54Ω, C_L = 50pF, Figure 2 and Figure 3			900	ns
Maximum Data Rate	DR_{MAX}		500			kbps
Driver Enable to Output High	t_{DZH}	R_L = 110Ω, C_L = 50pF, Figure 4			2540	ns
Driver Enable to Output Low	t_{DZL}	R_L = 110Ω, C_L = 50pF, Figure 5			2540	ns
Driver Disable Time From Low	t_{DLZ}	R_L = 110Ω, C_L = 50pF, Figure 5			140	ns
Driver Disable Time From High	t_{DHZ}	R_L = 110Ω, C_L = 50pF, Figure 4			140	ns
RECEIVER						
Receiver Propagation Delay	t_{RPLH}, t_{RPHL}	C_L = 15pF, Figure 6 and Figure 7 (Note 9)			240	ns
Receiver Output Skew	t_{RSKEW}	C_L = 15pF, Figure 6 and Figure 7 (Note 9)			34	ns
Maximum Data Rate	DR_{MAX}		500			kbps
Receiver Enable to Output High	t_{RZH}	R_L = 1kΩ, C_L = 15pF, S2 closed, Figure 8			20	ns
Receiver Enable to Output Low	t_{RZL}	R_L = 1kΩ, C_L = 15pF, S1 closed, Figure 8			30	ns
Receiver Disable Time From Low	t_{RLZ}	R_L = 1kΩ, C_L = 15pF, S1 closed, Figure 8			20	ns
Receiver Disable Time From High	t_{RHZ}	R_L = 1kΩ, C_L = 15pF, S2 closed, Figure 8			20	ns

Switching Electrical Characteristics (MAX14859)

(V_{DDA} - V_{GNDA} = 3.0V to 5.5V, V_{DDB} - V_{GNDB} = 3.0V to 5.5V, T_A = T_{MIN} to T_{MAX}, unless otherwise noted. Typical values are at V_{DDA} - V_{GNDA} = 3.3V, V_{DDB} - V_{GNDB} = 3.3V, V_{GNDA} = V_{GNDB}, and T_A = +25°C.) (Note 7)

PARAMETER	SYMBOL	CONDITIONS	MIN	TYP	MAX	UNITS
DYNAMIC						
Common-Mode Transient Immunity	CMTI	(Note 8)		35		kV/µs
Glitch Rejection		TXD, DE, RXD	10	17	29	ns
DRIVER						
Driver Propagation Delay	t_{DPLH}, t_{DPHL}	R_L = 54Ω, C_L = 50pF, Figure 2 and Figure 3			65	ns
Differential Driver Output Skew $\lvert t_{DPLH} - t_{DPHL} \rvert$	t_{DSKEW}	R_L = 54Ω, C_L = 50pF, Figure 2 and Figure 3			7	ns
Driver Differential Output Rise or Fall Time	t_{LH}, t_{HL}	R_L = 54Ω, C_L = 50pF, Figure 2 and Figure 3			10	ns
Maximum Data Rate	DR_{MAX}		25			Mbps
Driver Enable to Output High	t_{DZH}	R_L = 110Ω, C_L = 50pF, Figure 4			80	ns
Driver Enable to Output Low	t_{DZL}	R_L = 110Ω, C_L = 50pF, Figure 5			80	ns
Driver Disable Time From Low	t_{DLZ}	R_L = 110Ω, C_L = 50pF, Figure 5			80	ns
Driver Disable Time From High	t_{DHZ}	R_L = 110Ω, C_L = 50pF, Figure 4			80	ns
RECEIVER						
Receiver Propagation Delay	t_{RPLH}, t_{RPHL}	C_L = 15pF, Figure 6 and Figure 7 (Note 9)			65	ns
Receiver Output Skew	t_{RSKEW}	C_L = 15pF, Figure 6 and Figure 7 (Note 9)			7	ns
Maximum Data Rate	DR_{MAX}		25			Mbps
Receiver Enable to Output High	t_{RZH}	R_L = 1kΩ, C_L = 15pF, S2 closed, Figure 8			20	ns
Receiver Enable to Output Low	t_{RZL}	R_L = 1kΩ, C_L = 15pF, S1 closed, Figure 8			30	ns
Receiver Disable Time From Low	t_{RLZ}	R_L = 1kΩ, C_L = 15pF, S1 closed, Figure 8			20	ns
Receiver Disable Time From High	t_{RHZ}	R_L = 1kΩ, C_L = 15pF, S2 closed, Figure 8			20	ns

Note 2: All devices are 100% production tested at T_A = +25°C. Specifications over temperature are guaranteed by design.
Note 3: All currents into the device are positive. All currents out of the device are negative. All voltages are referenced to their respective ground (GNDA or GNDB), unless otherwise noted.
Note 4: V_{LDO} max indicates voltage capability of the circuit. Power dissipation requirements may limit V_{LDO} max to a lower value.
Note 5: ΔV_{OD} and ΔV_{OC} are the changes in V_{OD} and V_{OC}, respectively, when the TXD input changes state.
Note 6: The short-circuit output current applies to the peak current just prior to current limiting.
Note 7: Not production tested. Guaranteed by design.
Note 8: CMTI is the maximum sustainable common-mode voltage slew rate while maintaining the correct output states. CMTI applies to both rising and falling common-mode voltage edges. Tested with the transient generator connected between GNDA and GNDB. ΔV_{CM} = 1kV.
Note 9: Capacitive load includes test probe and fixture capacitance.
Note 10: V_{IORM}, V_{IOWM}, and V_{ISO} are defined by the IEC 60747-5-5 standard.
Note 11: Product is qualified V_{ISO} for 60 seconds. 100% production tested at 120% of V_{ISO} for 1s.

Insulation Characteristics

PARAMETER	SYMBOL	CONDITIONS	VALUE	UNITS
Partial DischargeTest Voltage	V_{PR}	Method B1 = V_{IORM} x 1.875 (t = 1s, partial discharge < 5pC)	2250	V_P
Maximum Repetitive Peak Isolation Voltage	V_{IORM}	(Note 10)	1200	V_P
Maximum Working Isolation Voltage	V_{IOWM}	(Note 10)	848	V_{RMS}
Maximum Transient Isolation Voltage	V_{IOTM}	t = 1s	8400	V_P
Maximum Withstand Isolation Voltage	V_{ISO}	t = 60s, f = 60Hz (Notes 10, 11)	5000	V_{RMS}
Maximum Surge Isolation Voltage	V_{IOSM}	Basic insulation	10	kV
Insulation Resistance	R_S	T_A = +150°C, V_{IO} = 500V	>10^9	Ω
Barrier Capacitance Input-to-Output	CIO	f = 1MHz	2	pF
Minimum Creepage Distance	CPG	Wide SOIC	8	mm
Minimum Clearance Distance	CLR	Wide SOIC	8	mm
Internal Clearance		Distance through insulation	0.015	mm
Comparative Tracking Resistance Index	CTI	Material Group II (IEC 60112)	575	
Climatic Category			40/125/21	
Pollution Degree (DIN VDE 0110, Table 1)			2	

Safety Regulatory Approvals

UL
The MAX14857/MAX14859 is certified under UL1577. For more details, see File E351759.
Rate up to 5000V$_{RMS}$ isolation voltage for basic insulation.
cUL
The MAX14857/MAX14859 is certified under UL1577. For more details, see File E351759. Rate up to 5000V$_{RMS}$ isolation voltage for basic insulation.

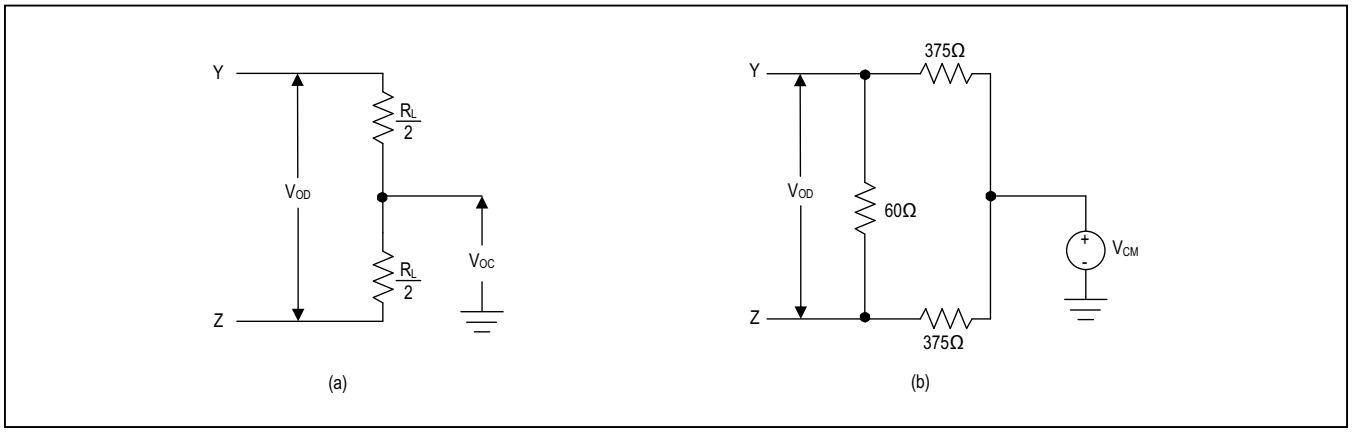

Figure 1. Driver DC Test Load

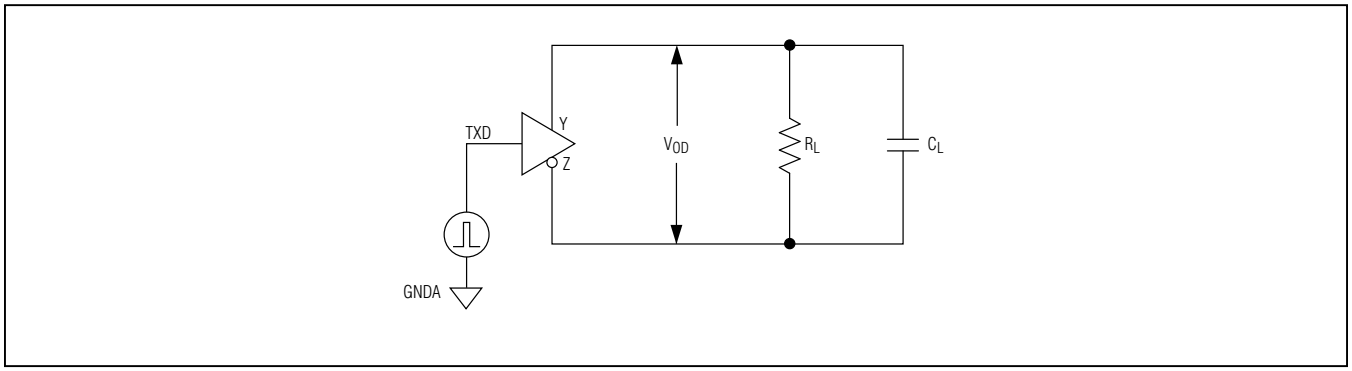

Figure 2. Driver Timing Test Circuit

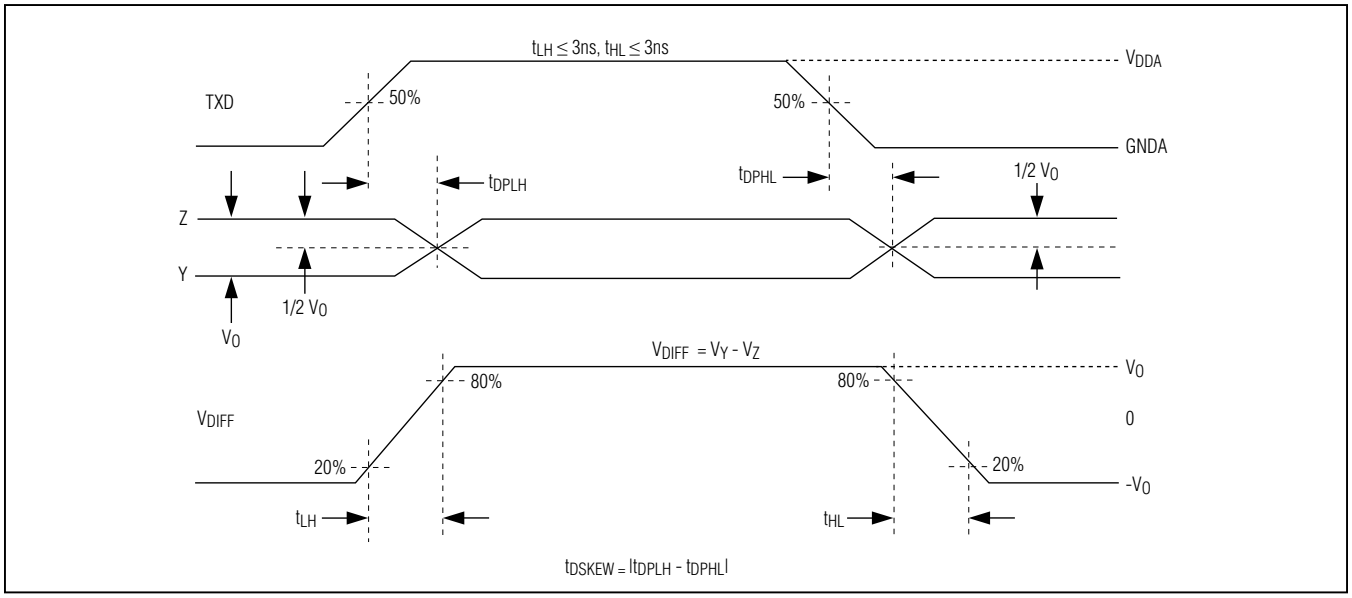

Figure 3. Driver Propagation Delays

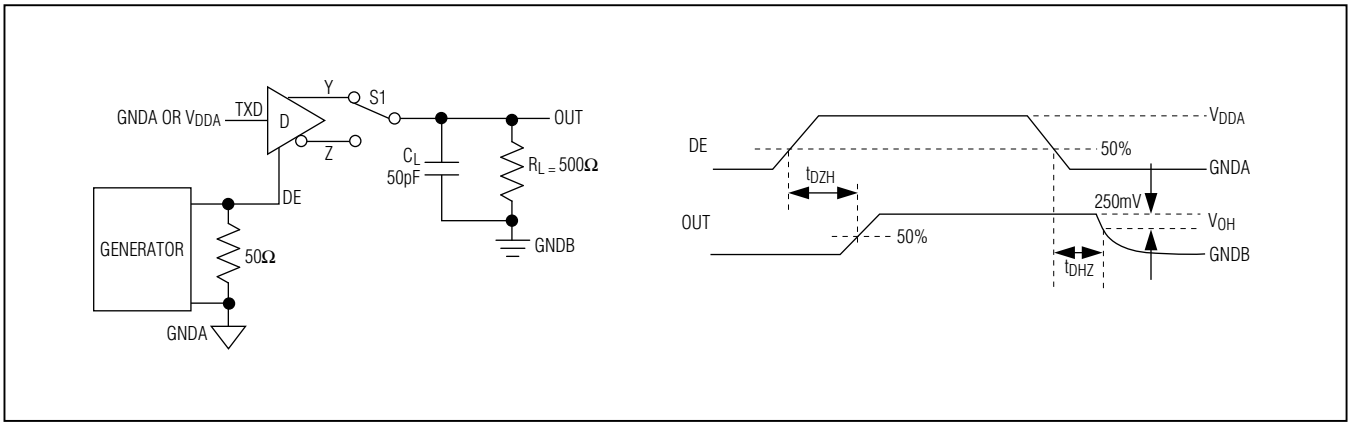

Figure 4. Driver Enable and Disable Times (t_{DHZ}, t_{DZH})

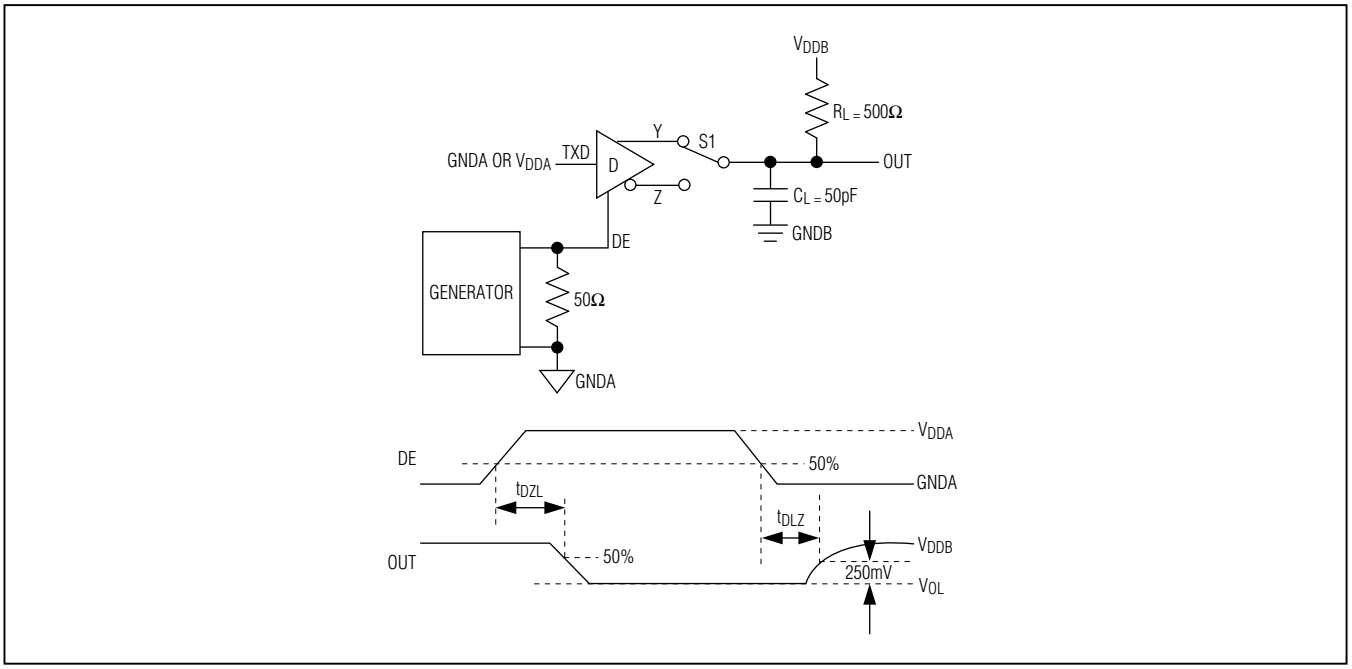

Figure 5. Driver Enable and Disable Times (t_{DZL}, t_{DLZ})

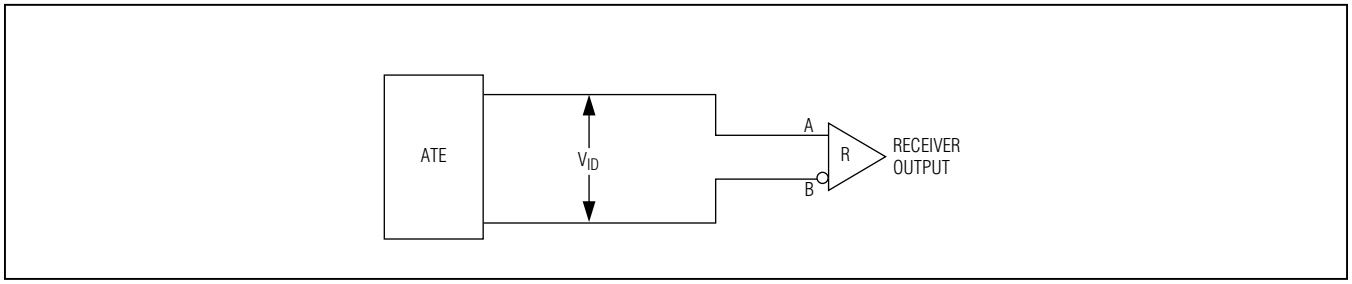

Figure 6. Receiver Propagation Delay Test Circuit

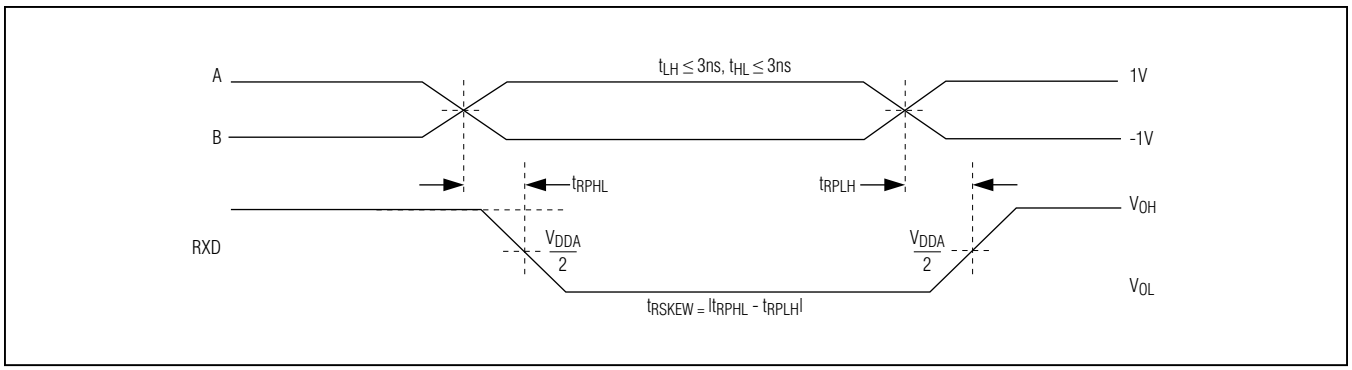

Figure 7. Receiver Propagation Delays

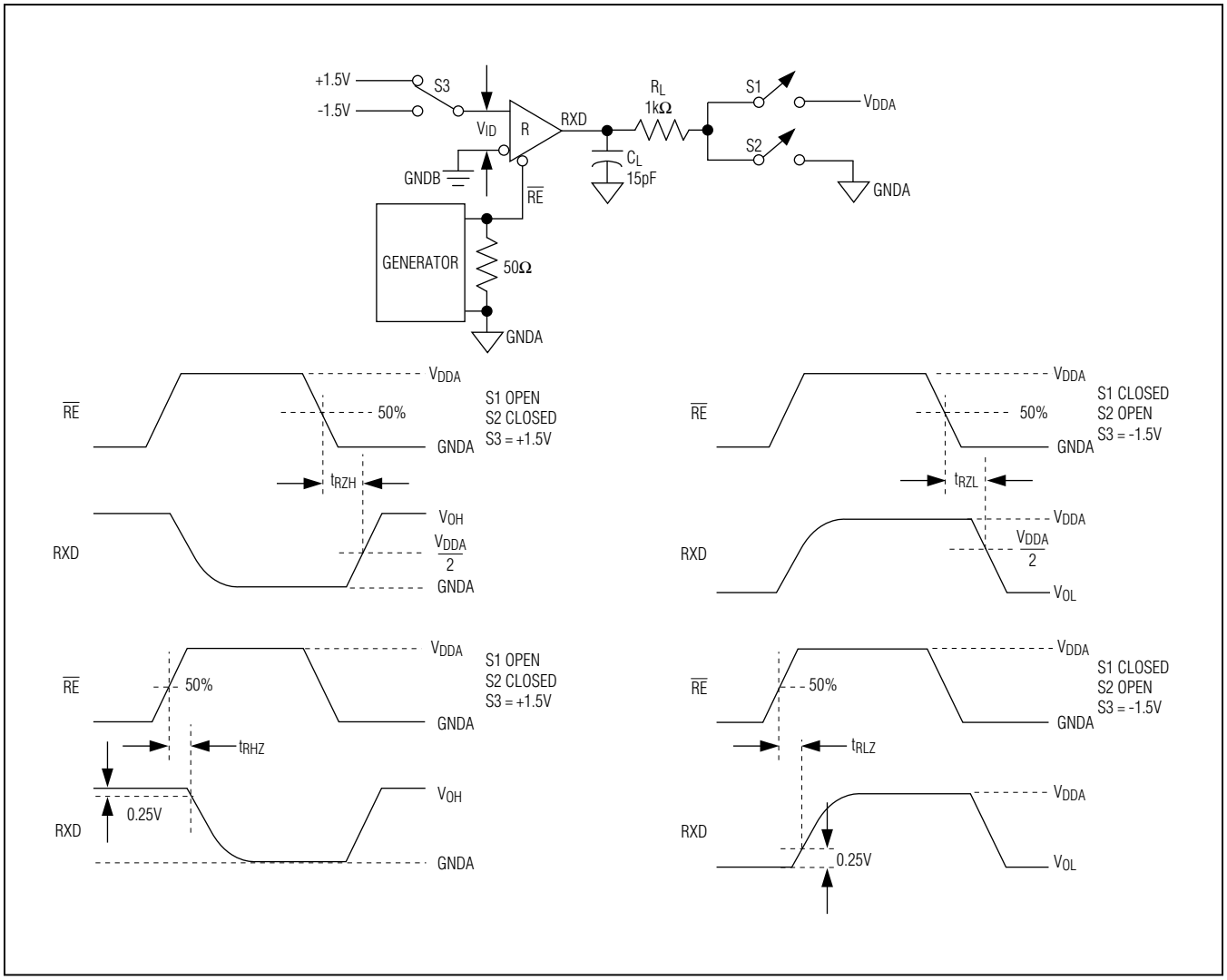

Figure 8. Receiver Enable and Disable Times

Typical Operating Characteristics

(V_{DDA} – GNDA = 3.3V, V_{DDB} – GNDB = 3.3V, V_{GNDA} = V_{GNDB}, and T_A = +25°C, unless otherwise noted.)

V_{DDA} SUPPLY CURRENT vs. TEMPERATURE

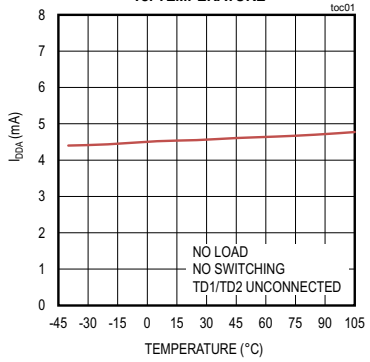

V_{DDB} SUPPLY CURRENT vs. TEMPERATURE

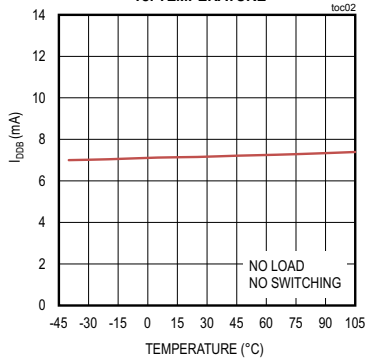

DIFFERENTIAL OUTPUT VOLTAGE vs. TEMPERATURE

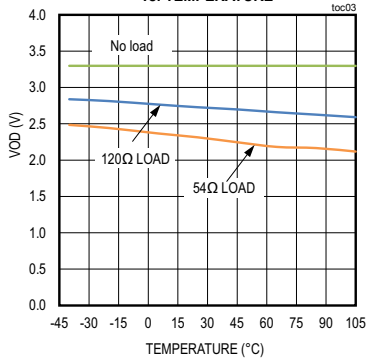

MAX14857 TRANSMITTER PROPAGATION DELAY vs. TEMPERATURE

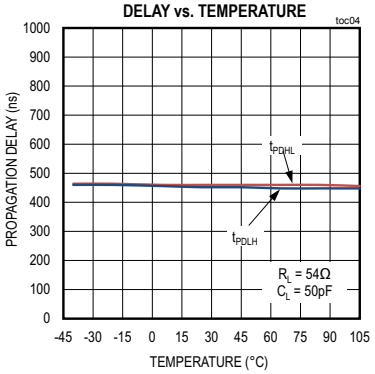

MAX14857 RECEIVER PROPAGATION DELAY vs. TEMPERATURE

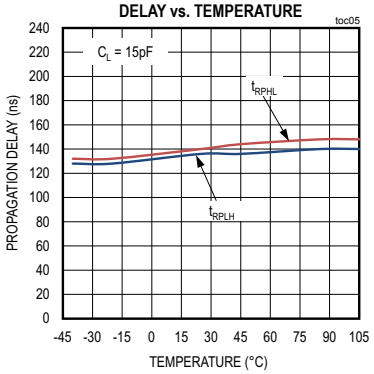

MAX14857 DRIVER ENABLE/DISABLE DELAY vs. TEMPERATURE

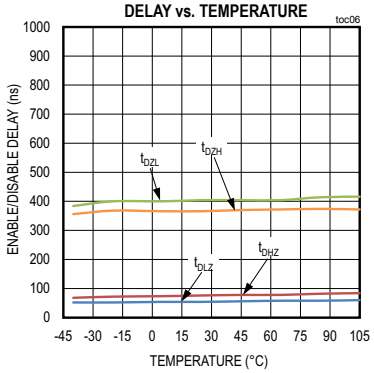

MAX14857 DRIVER PROPAGATION DELAY

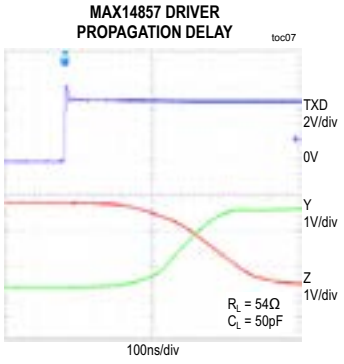

MAX14857 RECEIVER PROPAGATION DELAY

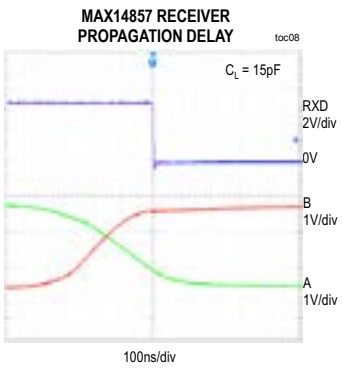

MAX14859 TRANSMITTER PROPAGATION DELAY vs. TEMPERATURE

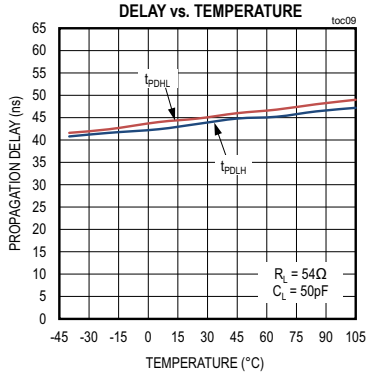

Typical Operating Characteristics (continued)

(V_{DDA} – GNDA = 3.3V, V_{DDB} – GNDB = 3.3V, V_{GNDA} = V_{GNDB}, and T_A = +25°C, unless otherwise noted.)

MAX14859 RECEIVER PROPAGATION DELAY vs. TEMPERATURE

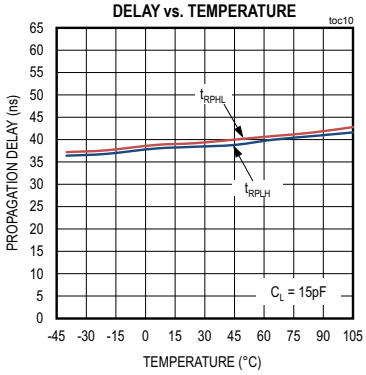

MAX14859 DRIVER ENABLE/DISABLE DELAY vs. TEMPERATURE

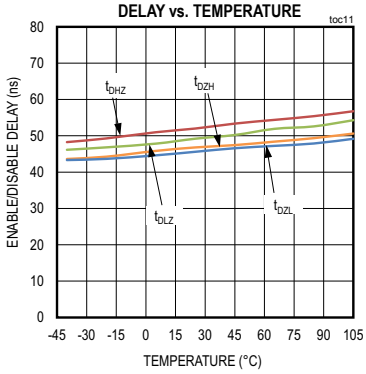

MAX14859 DRIVER PROPAGATION DELAY

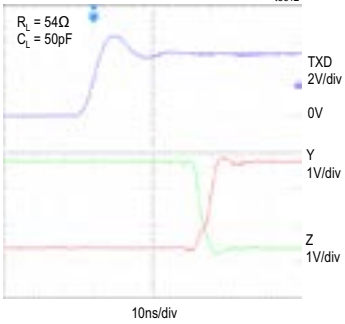

MAX14859 RECEIVER PROPAGATION DELAY

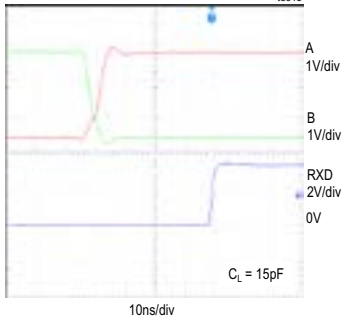

RECEIVER ENABLE/DISABLE DELAY vs. TEMPERATURE

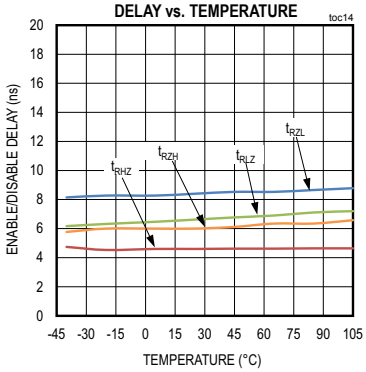

V_{DDA} SUPPLY CURRENT vs. DATA RATE

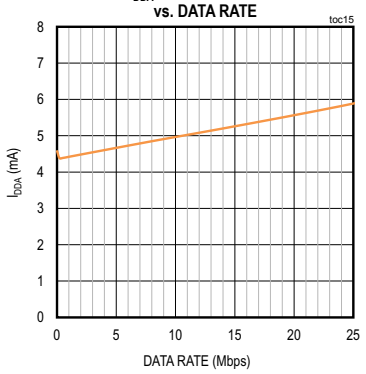

Typical Operating Characteristics (continued)

(V_{DDA} – GNDA = 3.3V, V_{DDB} – GNDB = 3.3V, V_{GNDA} = V_{GNDB}, and T_A = +25°C, unless otherwise noted.)

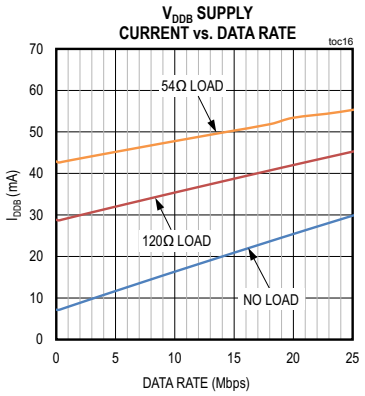

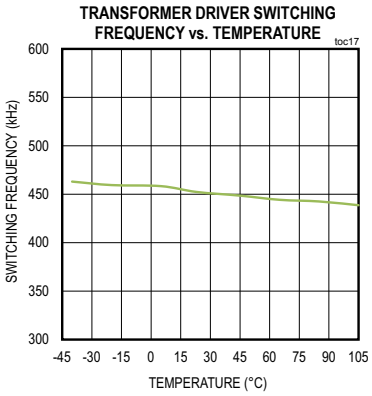

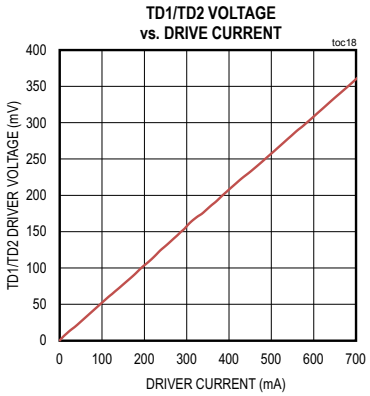

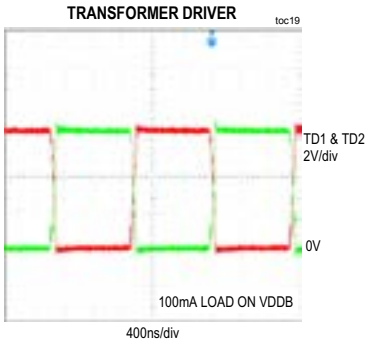

Pin Configuration

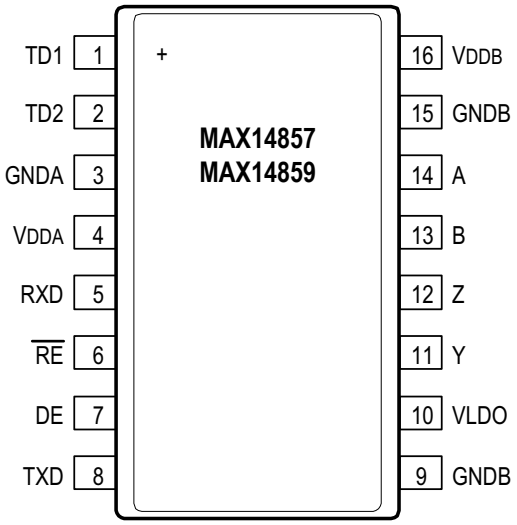

Pin Description

PIN	NAME	REFERENCE	FUNCTION
1	TD1	GNDA	Transformer Driver Output 1
2	TD2	GNDA	Transformer Driver Output 2
3	GNDA	—	UART/Logic-Side Ground. GNDA is the ground reference for digital signals and the transformer driver.
4	V_{DDA}	GNDA	UART/Logic-Side Power Input. Bypass V_{DDA} to GNDA with both 0.1µF and 1µF capacitors as close to the device as possible.
5	RXD	GNDA	Receiver Data Output. Drive $\overline{RE}$ low to enable RXD. With $\overline{RE}$ low, RXD is high when (V_A - V_B) > -10mV and is low when (V_A - V_B) < -200mV. RXD is high when V_{DDB} is less than V_{UVLOB}. RXD is high impedance when $\overline{RE}$ is high.
6	$\overline{RE}$	GNDA	Receiver Output Enable. Drive $\overline{RE}$ low or connect to GNDA to enable RXD. Drive $\overline{RE}$ high to disable RXD. RXD is high impedance when $\overline{RE}$ is high. $\overline{RE}$ has an internal 4.5µA pull-down to GNDA.

Pin Description (continued)

PIN	NAME	REFERENCE	FUNCTION
7	DE	GNDA	Driver Output Enable. Drive DE high to enable bus driver outputs Y and Z. Drive DE low or connect to GNDA to disable Y and Z. Y and Z are high impedance when DE is low. DE has an internal 4.5µA pulldown to GNDA.
8	TXD	GNDA	Driver Input. With DE high, a low on TXD forces the noninverting output (Y) low and the inverting output (Z) high. Similarly, a high on TXD forces the noninverting output high and the inverting output low. TXD has an internal 4.5µA pullup to V_{DDA}.
9, 15	GNDB	—	Cable-Side Ground. GNDB is the ground reference for the internal LDO and the RS-485/ RS-422 bus signals.
10	V_{LDO}	GNDB	LDO Power Input. Connect a minimum voltage of 3.18V to V_{LDO} to power the cable-side of the transceiver. Bypass V_{LDO} to GNDB with both 0.1µF and 1µF capacitors as close as possible to the device. To disable the internal LDO, leave V_{LDO} unconnected or connect to GNDB.
11	Y	GNDB	Noninverting Driver Output
12	Z	GNDB	Inverting Driver Output
13	B	GNDB	Inverting Receiver Input
14	A	GNDB	Noninverting Receiver Input
16	V_{DDB}	GNDB	Cable-Side Power Input/Isolated LDO Power Output. Bypass V_{DDB} to GNDB with both 0.1µF and 1µF capacitors as close as possible to the device. V_{DDB} is the output of the internal LDO when power is applied to V_{LDO}. When the internal LDO is not used (V_{LDO} is unconnected or connected to GNDB), V_{DDB} is the positive supply input for the cable-side of the IC.

Function Tables

TRANSMITTING					
INPUTS				OUTPUTS	
V_{DDA}	V_{DDB}	DE	TXD	Y	Z
≥ V_{UVLOA}	≥ V_{UVLOB}	1	1	1	0
≥ V_{UVLOA}	≥ V_{UVLOB}	1	0	0	1
≥ V_{UVLOA}	≥ V_{UVLOB}	0	X	High-Z	High-Z
< V_{UVLOA}	≥ V_{UVLOB}	X	X	High-Z	High-Z
≥ V_{UVLOA}	< V_{UVLOB}	X	X	High-Z	High-Z
< V_{UVLOA}	< V_{UVLOB}	X	X	High-Z	High-Z

***Note**: Drive DE low to disable the transmitter outputs. Drive DE high to enable the transmitter outputs. DE has an internal pulldown to GNDA.*

X = Don't care

RECEIVING				
INPUTS				OUTPUTS
V_{DDA}	V_{DDB}	$\overline{RE}$	(V_A - V_B)	RXD
≥ V_{UVLOA}	≥ V_{UVLOB}	0	> -10mV	1
≥ V_{UVLOA}	≥ V_{UVLOB}	0	< -200mV	0
≥ V_{UVLOA}	≥ V_{UVLOB}	0	Open/Short	1
≥ V_{UVLOA}	≥ V_{UVLOB}	1	X	High-Z
< V_{UVLOA}	≥ V_{UVLOB}	X	X	High-Z
≥ V_{UVLOA}	< V_{UVLOB}	0	X	1
< V_{UVLOA}	< V_{UVLOB}	X	X	High-Z

***Note**: Drive $\overline{RE}$ high to disable the receiver output. Drive $\overline{RE}$ low to enable to receiver output. $\overline{RE}$ has an internal pulldown to GNDA.*

X = Don't care

Detailed Description

The MAX14857/MAX14859 isolated RS-485/RS-422 transceivers provide 5000V$_{RMS}$ (60s) of galvanic isolation between the RS-485/RS-422 cable-side of the transceiver and the UART-side. These devices allow up to 500kbps (MAX14857) or 25Mbps (MAX14859) communication across an isolation barrier when a large potential exists between grounds on each side of the barrier.

Isolation

Both data and power can be transmitted across the isolation barrier. Data isolation is achieved using integrated capacitive isolation that allows data transmission between the UART-side and the cable-side of the transceiver.

To achieve power isolation, the MAX14857/MAX14859 feature an integrated transformer driver to drive an external center-tapped transformer, allowing the transfer of operating power from the UART-side across the isolation barrier to the cable-side. Connect the primary side of the external transformer to the MAX14857/MAX14859's transformer driver outputs (TD1 and TD2). Connect the primary center-tap to V_{DDA}.

Integrated LDO

The MAX14857/MAX14859 include an internal low-dropout regulator with a set 3.3V (typ) output that is used to power the cable-side of the IC. The output of the LDO is V_{DDB}. The LDO has a 300mA (typ) current limit. If the LDO is unused, connect V_{LDO} to GNDB and apply +3.3V directly to V_{DDB}.

True Fail-Safe

The MAX14857/MAX14859 guarantee a logic-high on the receiver output when the receiver inputs are shorted or open, or when connected to a terminated transmission line with all drivers disabled. The receiver threshold is fixed between -10mV and -200mV. If the differential receiver input voltage (V_A - V_B) is greater than or equal to -10mV, RXD is logic high. In the case of a terminated bus with all transmitters disabled, the receiver's differential input voltage is pulled to zero by the termination resistors. Due to the receiver thresholds of the MAX14857/MAX14859, this results in a logic-high at RXD.

Driver Output Protection

Two mechanisms prevent excessive output current and power dissipation caused by faults or by bus contention. The first, a current limit on the output stage, provides immediate protection against short circuits over the entire common-mode voltage range. The second, a thermal-shutdown circuit, forces the driver outputs into a high-impedance state if the die temperature exceeds +160°C (typ).

Thermal Shutdown

The MAX14857/MAX14859 are protected from overtemperature damage by integrated thermal shutdown circuitry. When the junction temperature (T_J) exceeds +160°C (typ), the driver outputs go high impedance. The device resumes normal operation when T_J falls below +145°C (typ).

Transformer Driver

Overcurrent Limiting

The MAX14857/MAX14859 feature overcurrent limiting to protect the integrated transformer driver from excessive currents when charging large capacitive loads or driving into short-circuits. Current limiting is achieved in two stages: internal circuitry monitors the output current and detects when the peak current rises above 1.2A. When the 1.2A threshold is exceeded, internal circuitry reduces the output current to the 730mA current-limit. The MAX14857/MAX14859 monitor the driver current on a cycle-by-cycle basis and limit the current until the short is removed.

The transformer driver on the MAX14857/MAX14859 can dissipate large amounts of power during overcurrent limiting, causing the IC to enter thermal shutdown. When the junction temperature of the driver exceeds the thermal shutdown threshold, the TD1 and TD2 drivers outputs are disabled. The driver resumes normal operation when the temperature falls below the themal shutdown hysteresis.

Transformer Selection

The integrated push-pull transformer driver allows the transmission of operating power from the logic side, across the isolation barrier, to the isolated field side of the device. The 450kHz transformer driver operates with center-tapped primary transformers. Select a transformer with an ET product greater than or equal to the ET of the driver to ensure that the transformer does not enter saturation. E is the voltage applied to the transformer and T is the maximum time it is applied during any one cycle. Calculate the minimum ET product for the transformer primary as:

$$ET = V_{MAX}/(2 \times f_{MIN})$$

Where V_{MAX} is the worst-case maximum supply voltage on V_{DDA} and f_{MIN} is the minimum frequency at that supply voltage. For example, using 5.5V and 350kHz, the required minimum ET product is 7.9Vµs. Table 1 includes a list of recommended transformers.

Applications Information

128 Transceivers on the Bus

The standard RS-485 receiver input impedance is one unit load, and a standard driver can drive up to 32 unit loads. The MAX14857/MAX14859 transceivers have a ¼-unit load receiver, allowing up to 128 transceivers connected in parallel on one communication line. Connect any combination of these devices, and/or other RS-485 devices, for a maximum of 32 unit loads to the line.

Typical Application

The MAX14857/MAX14859 full-duplex transceivers are designed for bidirectional data communications on multipoint bus transmission lines. Figure 9 and Figure 10 show typical network applications circuits. To minimize reflections, the bus should be terminated at the receiver input in its characteristics impedance, and stub lengths off the main line should be kept as short as possible.

Layout Considerations

It is recommended to design an isolation or keep-out channel underneath the isolator that is free from ground and signal planes. Any galvanic or metallic connection between the cable-side and UART-side defeats the isolation.

Table 1. Recommended Transformers

MANUFACTURER PART NUMBER	APPLICATION	CONFIGURATION	ISOLATION (V_{RMS})	DIMENSIONS
HALO TGMR-1450V6LF	5V to 3.3V	1CT:1CT	5000	9.45 x 10.87 x 10.03
HALO TGMR-1455V6LF	3.3V to 3.3V	1CT:1.5CT	5000	9.45 x 10.87 x 10.03
WURTH 750315229	5V to 3.3V	1CT:1.1CT	5000	9.14 x 8.00 x 7.62
WURTH 750315230	3.3V to 3.3V	1CT:1.3CT	5000	9.14 x 8.00 x 7.62
WURTH 750315231	3.3V to 3.3V	1CT:1.7CT	5000	9.14 x 8.00 x 7.62

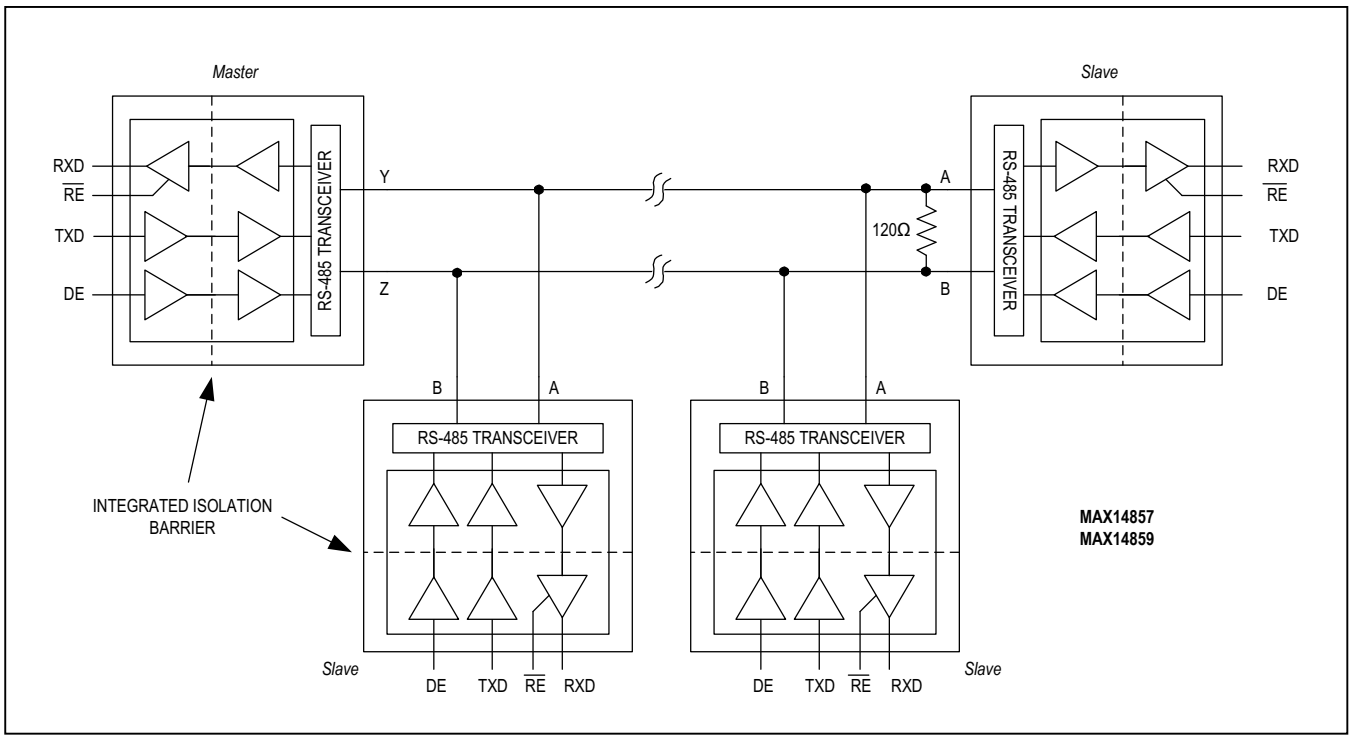

Figure 9. Typical Isolated Full-Duplex RS-485/RS-422 Application

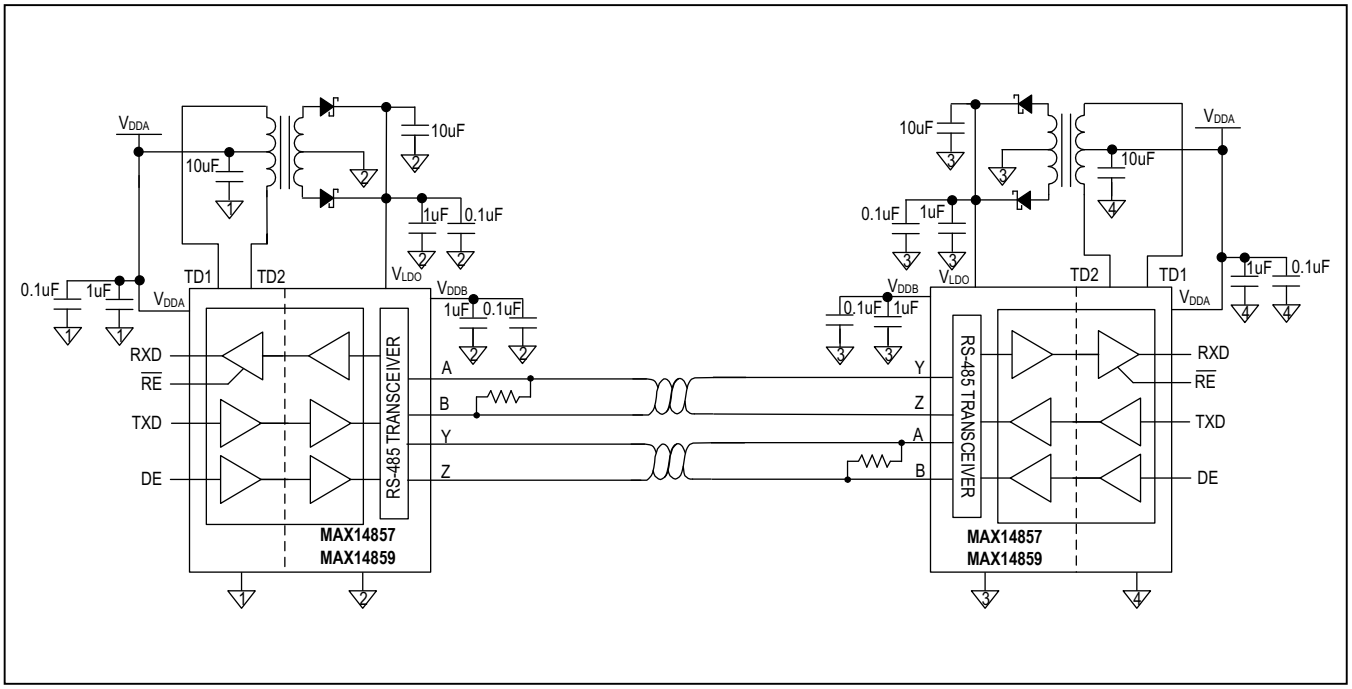

Figure 10. Typical Isolated RS-485/RS-422 Application with Integrated Transformer Driver

Ensure that the decoupling capacitors between V_{DDA} and GNDA and between V_{LDO}, V_{DDB}, and GNDB are located as close as possible to the IC to minimize inductance.

Route important signal lines close to the ground plane to minimize possible external influences. On the cable-side of the MAX14857/MAX14859, it is good practice to have the bus connectors and termination resistor as close as possible to the A and B pins.

Extended ESD Protection

ESD protection structures are incorporated on all pins to protect against electrostatic discharge encountered during handling and assembly. The driver outputs and receiver inputs of the MAX14857/MAX14859 have extra protection against static electricity. The ESD structures withstand high ESD in normal operation and when powered down. After an ESD event, the devices keep working without latch-up or damage.

Bypass V_{DDA} to GNDA and bypass V_{DDB} and V_{LDO} to GNDB with both 0.1µF and 1µF capacitors to ensure maximum ESD protection.

ESD protection can be tested in various ways. The transmitter outputs and receiver inputs of the MAX14857/MAX14859 are characterized for protection to the cable-side ground (GNDB) to the following limits:

- ±35kV HBM
- ±18kV using the Air-Gap Discharge method specified in IEC 61000-4-2
- ±8kV using the Contact Discharge method specified in the IEC 61000-4-2

ESD Test Conditions

ESD performance depends on a variety of conditions. Contact Maxim for a reliability report that documents test setup, test methodology, and test results.

Human Body Model (HBM)

Figure 11 shows the HBM test model and Figure 12 shows the current waveform it generates when discharged in a low-impedance state. This model consists of a 100pF capacitor charged to the ESD voltage of interest, which is then discharged in to the test device through a 1.5kΩ resistor.

IEC 61000-4-2

The IEC 61000-4-2 standard covers ESD testing and performance of finished equipment. However, it does not specifically refer to integrated circuits. The MAX14857/MAX14859 help in designing equipment to meet IEC 61000-4-2 without the need for additional ESD protection components.

The major difference between tests done using the HBM and IEC 61000-4-2 is higher peak current in IEC 61000-4-2 because series resistance is lower in the IEC 61000-4-2 model. Hence, the ESD withstand voltage measured to IEC 61000-4-2 is generally lower than that measured using the HBM.

Figure 13 shows the IEC 61000-4-2 model and Figure 14 shows the current waveform for IEC 61000-4-2 ESD Contact Discharge Test.

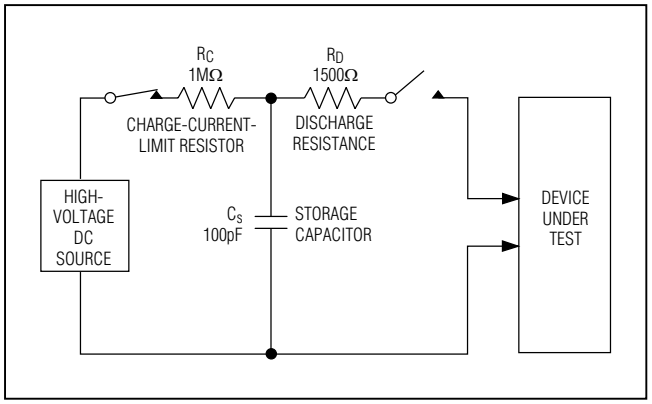

Figure 11. Human Body ESD Test Model

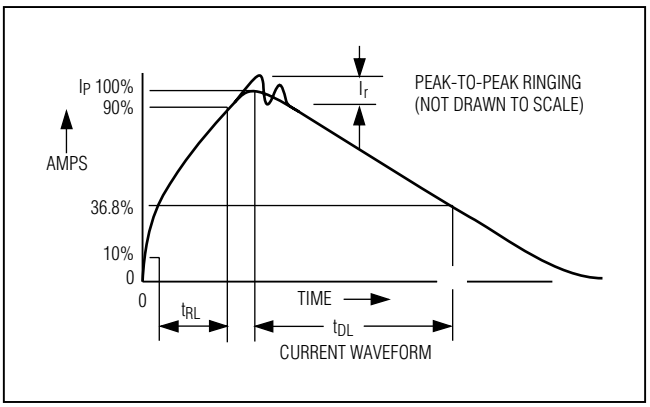

Figure 12. Human Body Current Waveform

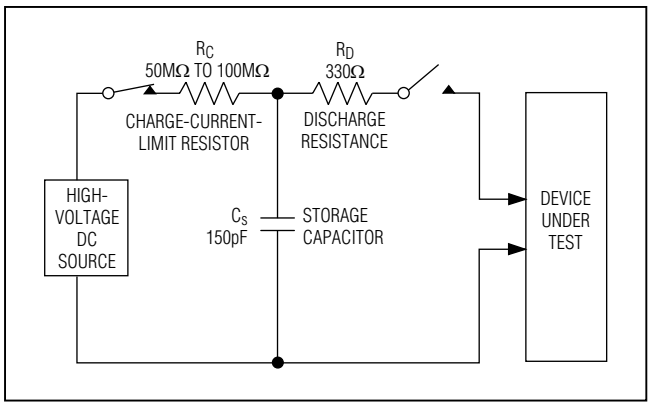

Figure 13. IEC 61000-4-2 ESD Test Model

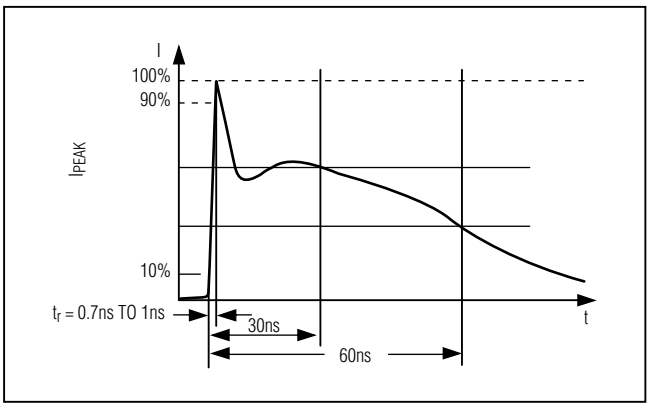

Figure 14. IEC 61000-4-2 ESD Generator Current Waveform

Typical Application Circuit

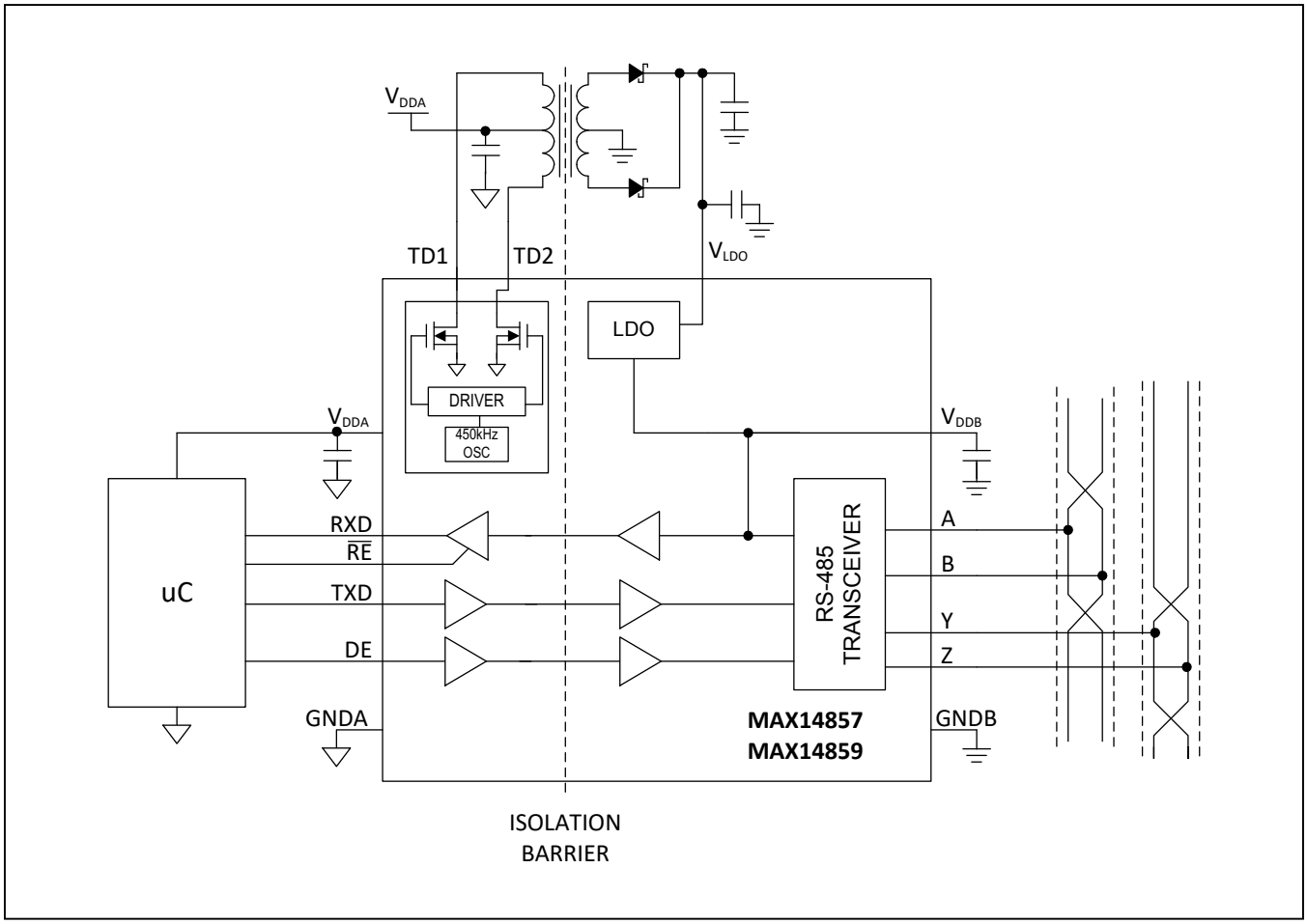

Ordering Information

PART	TEMP RANGE	PIN-PACKAGE
MAX14857GWE+	-40°C to +105°C	16 SOIC (W)
MAX14857GWE+T	-40°C to +105°C	16 SOIC (W)
MAX14859GWE+	-40°C to +105°C	16 SOIC (W)
MAX14859GWE+T	-40°C to +105°C	16 SOIC (W)

+Denotes a lead(Pb)-free/RoHS-compliant package.
T = Tape and reel

Chip Information

PROCESS: BiCMOS

Package Information

For the latest package outline information and land patterns (footprints), go to **www.maximintegrated.com/packages**. Note that a "+", "#", or "-" in the package code indicates RoHS status only. Package drawings may show a different suffix character, but the drawing pertains to the package regardless of RoHS status.

PACKAGE TYPE	PACKAGE CODE	OUTLINE NO.	LAND PATTERN NO.
16 SOIC	W16M+10	**21-0042**	**90-0107**

Revision History

REVISION NUMBER	REVISION DATE	DESCRIPTION	PAGES CHANGED
0	7/15	Initial release	—
1	6/16	Removed future product asterisks from *Ordering Information* table	22
2	1/17	Updated pending safety approvals	1, 7
3	10/17	Corrected RXD voltage for RXD in *Electrical Charateristics* table	2

For pricing, delivery, and ordering information, please contact Maxim Direct at 1-888-629-4642, or visit Maxim Integrated's website at www.maximintegrated.com.

Maxim Integrated cannot assume responsibility for use of any circuitry other than circuitry entirely embodied in a Maxim Integrated product. No circuit patent licenses are implied. Maxim Integrated reserves the right to change the circuitry and specifications without notice at any time. The parametric values (min and max limits) shown in the Electrical Characteristics table are guaranteed. Other parametric values quoted in this data sheet are provided for guidance.