19-0921; Rev 1; 7/96

MAXIM

Dual Mode™ 5V/Programmable Micropower Voltage Regulators

General Description

The MAX663/664/666 CMOS voltage regulators have a maximum quiescent current of 12µA. They can be used either as 5 volt, fixed output regulators with no additional components, or can be adjusted from 1.3V to 16V using two external resistors. Fixed or adjustable operation is automatically selected via the V_{SET} input. The MAX66X series, ideally suited for battery powered systems, has an input voltage range of 2 to 16.5V, an output current capability of 40mA, and can operate with low input-output differentials. Other features include current limiting and low power shut down.

The MAX663 positive regulator and MAX664 negative regulator are both pin and electrically compatible with the ICL7663 and ICL7664 and can plug-in replace these devices, improving performance and eliminating the need for external resistors in 5V applications. The MAX666 has a positive output and includes on-chip low-battery detection circuitry.

Applications

Handheld Instruments
LCD Display Systems
Pagers
Remote Data Acquisition and Telemetry
Radio Controlled Devices
Long-life Battery Powered Systems

Pin Configuration

Top View

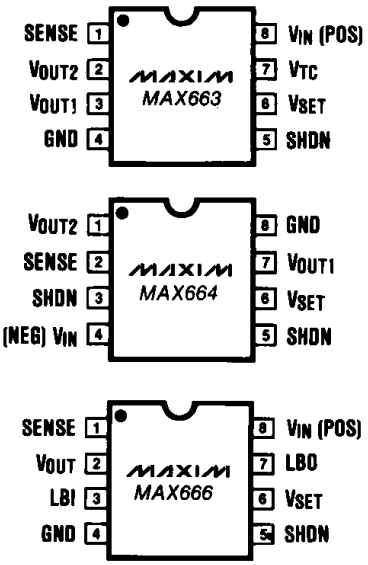

Features

- ◆ **Dual Mode Operation: Fixed +5V or Adjustable from +1.3V to +16V**
- ◆ **Low Power CMOS: 12µA Max Quiescent Current**
- ◆ **40mA Output Current, with Current Limiting**
- ◆ **Pin-Compatible Upgrade of ICL7663 and ICL7664**
- ◆ **+2V to +16.5V Operating Range**
- ◆ **Low Battery Detector (MAX666)**
- ◆ **No Output Over-Shoot on Power Up**

Ordering Information

PART	TEMP. RANGE	PIN-PACKAGE
MAX663C/D	0°C to +70°C	Dice
MAX663CPA	0°C to +70°C	8 Lead Plastic DIP
MAX663CSA	0°C to +70°C	8 Lead Small Outline
MAX663EPA	-40°C to +85°C	8 Lead Plastic DIP
MAX663ESA	-40°C to +85°C	8 Lead Small Outline
MAX663MJA	-55°C to +125°C	8 Lead CERDIP
MAX664C/D	0°C to +70°C	Dice
MAX664CPA	0°C to +70°C	8 Lead Plastic DIP
MAX664CSA	0°C to +70°C	8 Lead Small Outline
MAX664EPA	-40°C to +85°C	8 Lead Plastic DIP
MAX664ESA	-40°C to +85°C	8 Lead Small Outline
MAX664MJA	-55°C to +125°C	8 Lead CERDIP
MAX666C/D	0°C to +70°C	Dice
MAX666CPA	0°C to +70°C	8 Lead Plastic DIP
MAX666CSA	0°C to +70°C	8 Lead Small Outline
MAX666EPA	-40°C to +85°C	8 Lead Plastic DIP
MAX666ESA	-40°C to +85°C	8 Lead Small Outline
MAX666MJA	-55°C to +125°C	8 Lead CERDIP

Typical Operating Circuit

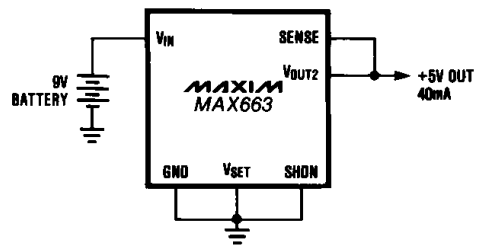

For free samples & the latest literature: http://www.maxim-ic.com, or phone 1-800-998-8800

Dual Mode 5V/Programmable Micropower Voltage Regulators

ABSOLUTE MAXIMUM RATINGS

MAX663 and MAX666

Input Supply Voltage ..... +18V
Terminal Voltage
Pins 1,3,5,6, MAX663 — Pin 7,
and MAX666 — Pin 2, ... GND -0.3V to V_{IN} +0.3V
MAX663 — Pin 2 ..... GND -0.3V to V_{OUT1} +0.3V
MAX666 — Pin 7 ..... GND -0.3V to +16.5V
Output Source Current
MAX663,666 — Pin 2 (V_{OUT2}, V_{OUT}) 50mA
MAX663 — Pin 3 (V_{OUT1}) 25mA
Output Sink Current, Pin 7 ..... -20mA

MAX664

Input Supply Voltage ..... -18V
Terminal Voltage
Pins 1,3,5,6,7 ..... V_{IN} -0.3V to GND +0.3V
Pin 2 ..... V_{IN} -0.3V to V_{OUT1} +0.3V
Output Sink Current, (Pins 1,7) ..... -25mA

ALL DEVICES

Power Dissipation
Plastic DIP (Derate 8.3mW/°C above +50°C) 625mW
Small Outline (Derate 6mW/°C above +50°C) 450mW
CERDIP (Derate 8mW/°C above +50°C) 800mW
Operating Temperature Range
MAX66XC ..... 0°C to +70°C
MAX66XE ..... -40°C to +85°C
MAX66XM ..... -55°C to +125°C
Storage Temperature ..... -65°C to +150°C
Lead Temperature (Soldering 10 seconds) ..... +300°C

Stresses above those listed under "Absolute Maximum Ratings" may cause permanent damage to the device. These are stress ratings only and functional operation of the device at these or any other conditions above those indicated in the operational sections of the specifications is not implied. Exposure to absolute maximum rating conditions for extended periods may affect device reliability.

ELECTRICAL CHARACTERISTICS, MAX663 AND MAX666

(V_{IN} = +9V, V_{OUT} = +5V, T_A = +25°C, unless otherwise noted.)

PARAMETER	SYMBOL	CONDITIONS	MIN	TYP	MAX	UNITS
Input Voltage	V_{IN}	Over Temperature (C) Over Temperature (E, M)	2.0 2.2		16.5	V
Quiescent Current	I_Q	No Load, V_{IN} = +16.5V T_A = +25°C Over Temperature (C) Over Temperature (E, M)		6	12 15 20	µA
Output Voltage	V_{OUT}	V_{SET} = GND Over Temperature (C, E) Over Temperature (M)	4.75 4.5	5.0 5.0	5.25 5.5	V
Line Regulation	$\Delta V_{OUT}/\Delta V_{IN}$	+2V ≤ V_{IN} ≤ +15V, V_{OUT} = V_{REF}		0.03	0.35	%/V
Load Regulation	$\Delta V_{OUT}/\Delta I_{OUT}$	MAX663: 1mA ≤ I_{OUT2} ≤ 20mA MAX663: 50µA ≤ I_{OUT1} ≤ 5mA MAX666: 1mA ≤ I_{OUT} ≤ 20mA		3.0 1.0 3.0	7.0 5.0 7.0	Ω
Reference Voltage	V_{SET}	V_{OUT} = V_{SET}	1.27		1.33	V
Reference Tempco.	$\Delta V_{SET}/\Delta T$	Over Temperature		±100		ppm/°C
V_{SET} Internal Threshold for Fixed +5V or Adjustable Output	$V_{F/A}$	V_{SET} < $V_{F/A}$ for +5V Out V_{SET} > $V_{F/A}$ for Adjustable Out		50		mV
V_{SET} Input Current	I_{SET}	Over Temperature (C, E) Over Temperature (M)		±0.01	±10 ±25	nA
Shutdown Input Voltage	V_{SHDN}	V_{SHDN} HI = Output Off V_{SHDN} LO = Output On	1.4		0.3	V
Shutdown Input Current	I_{SHDN}			±0.01	±10	nA
SENSE Input Threshold	V_{OUT} - V_{SENSE}	Current Limit Threshold		0.5		V
SENSE Input Resistance	R_{SENSE}			3		MΩ
Input-Output Saturation Resistance, MAX663 - V_{OUT1}	R_{SAT}	V_{IN} = +2V, I_{OUT} = 1mA V_{IN} = +9V, I_{OUT} = 2mA V_{IN} = +15V, I_{OUT} = 5mA		200 70 50	500 150 150	Ω
Output Current, V_{OUT2} (V_{OUT} on MAX666)	I_{OUT}	+3V ≤ V_{IN} ≤ +16.5V V_{IN} - V_{OUT} = +1.5V	40			mA
Minimum Load Current	$I_{L(MIN)}$	T_A = +25°C Over Temperature (C, E) Over Temperature (M)			1.0 5.0 10.0	µA

ELECTRICAL CHARACTERISTICS, MAX663 AND MAX666 (continued)

(V_{IN} = +9V, V_{OUT} = +5V, T_A = +25°C, unless otherwise noted.)

PARAMETER	SYMBOL	CONDITIONS	MIN	TYP	MAX	UNITS
LBI Input Threshold	V_{LBI}	MAX666	1.21	1.28	1.37	V
LBI Input Current	I_{LBI}	MAX666		±0.01	±10	nA
LBO Output Saturation Resistance	R_{SAT}	MAX666, I_{SAT} = 2mA		35	100	Ω
LBO Output Leakage Current		MAX666, LBI = +1.4V		10		nA
V_{TC} Open-Circuit Voltage (Note 1)	V_{TC}	MAX663		0.9		V
V_{TC} Sink Current (Note 1)	I_{TC}	MAX663		8.0	2.0	mA
V_{TC} Temperature Coefficient (Note 1)		MAX663		+2.5		mV/°C

Note 1: This output (MAX663 only) has a positive temperature coefficient. Using it in conjunction with the input of the regulator at V_{SET}, a negative coefficient results in the output voltage. The V_{TC} pin will not source current.

ELECTRICAL CHARACTERISTICS, MAX664

(V_{IN} = -9V, V_{OUT} = -5V, T_A = +25°C, unless otherwise noted.)

PARAMETER	SYMBOL	CONDITIONS	MIN	TYP	MAX	UNITS
Input Voltage	V_{IN}	Over Temperature (C) Over Temperature (E, M)	-2.0 -2.2		-16.5	V
Quiescent Current	I_Q	No Load, V_{IN} = -16.5V T_A = +25°C Over Temperature (C) Over Temperature (E, M)		6	12 15 20	µA
Output Voltage	V_{OUT}	V_{SET} = GND Over Temperature (C, E) Over Temperature (M)	-4.75 -4.5	-5.0 -5.0	-5.25 -5.5	V
Line Regulation	$\Delta V_{OUT}/\Delta V_{IN}$	-2V ≤ V_{IN} ≤ -15V, V_{OUT} = V_{REF}		0.03	0.35	%/V
Load Regulation	$\Delta V_{OUT}/\Delta I_{OUT}$	V_{OUT2} connected to V_{OUT1}, 1mA ≤ I_{OUT} ≤ 15mA		2.0	5.0	Ω
Reference Voltage	V_{SET}	V_{OUT} = V_{SET}	-1.27		-1.33	V
Reference Tempco.	$\Delta V_{SET}/\Delta T$	Over Temperature		±100		ppm/°C
V_{SET} Internal Threshold for Fixed -5V or Adjustable Output Operation	$V_{F/A}$	V_{SET} < $V_{F/A}$ for -5V Out, V_{SET} > $V_{F/A}$ for Variable Out		-50		mV
V_{SET} Input Current	I_{SET}	Over Temperature (C, E) Over Temperature (M)		±0.01	±10 ±25	nA
Shutdown Input Voltage	V_{SHDN}	V_{SHDN} HI = Output Off V_{SHDN} LO = Output On	-1.4		 -0.3	
Shutdown Input Current	I_{SHDN}			±0.01	±10	nA
SENSE Input Threshold	$V_{OUT} - V_{SENSE}$	Current Limit Threshold		-0.6		V
SENSE Input Resistance	R_{SENSE}			3		MΩ
Input-Output Saturation Resistance	R_{SAT}	V_{OUT2} connected to V_{OUT1} V_{IN} = -2V, I_{OUT} = -1mA V_{IN} = -9V, I_{OUT} = -2mA V_{IN} = -15V, I_{OUT} = -5mA		 150 40 30	 500 80 60	Ω
Minimum Load Current	$I_{L(MIN)}$	T_A = +25°C Over Temperature (C, E) Over Temperature (M)			-1.0 -5.0 -10.0	µA

Dual Mode 5V/Programmable Micropower Voltage Regulators

Typical Operating Characteristics

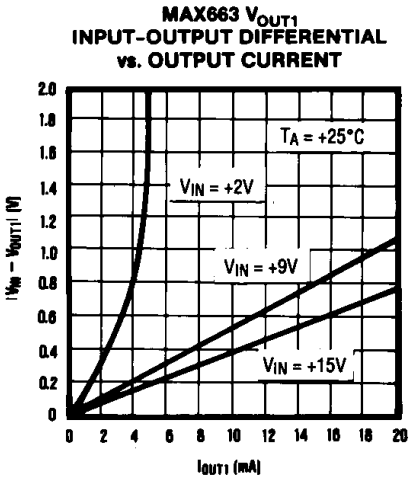

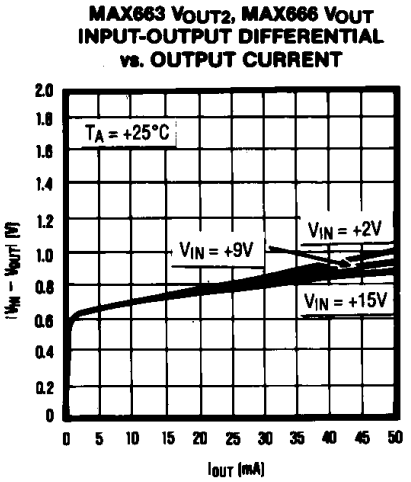

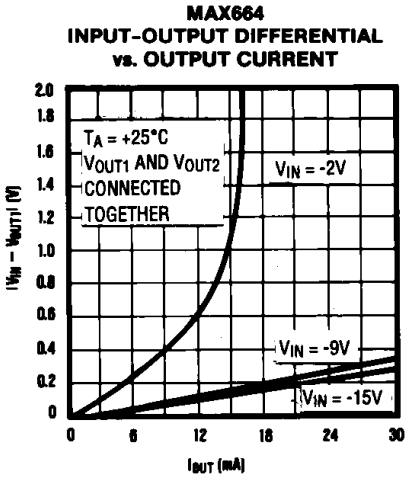

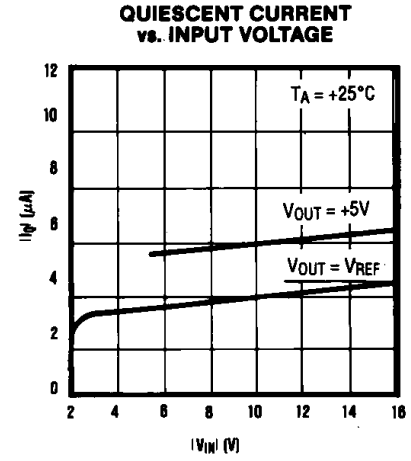

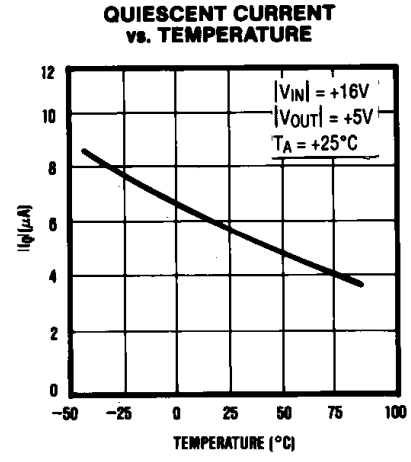

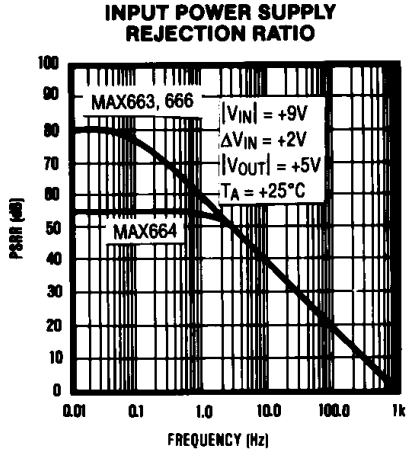

Pin Description

NAME	FUNCTION (See text for details)
$V_{OUT(1)(2)}$	Regulator Output(s)
V_{IN}	Regulator Input
SENSE	Current limit sense input
LBI	Low battery detection input
LBO	Low battery detection output
SHUTDOWN	Disables output for minimum power consumption
V_{SET}	Ground this pin for 5V output or Connect to external resistive divider for adjustable output
V_{TC}	Temperature-proportional voltage for negative TC output

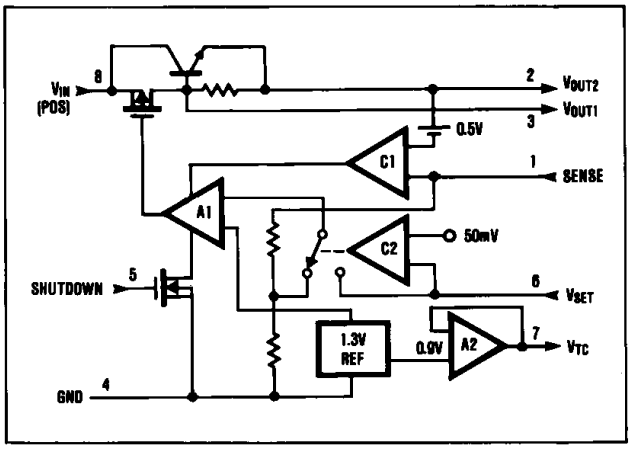

Figure 1. MAX663 Positive Regulator, Block Diagram

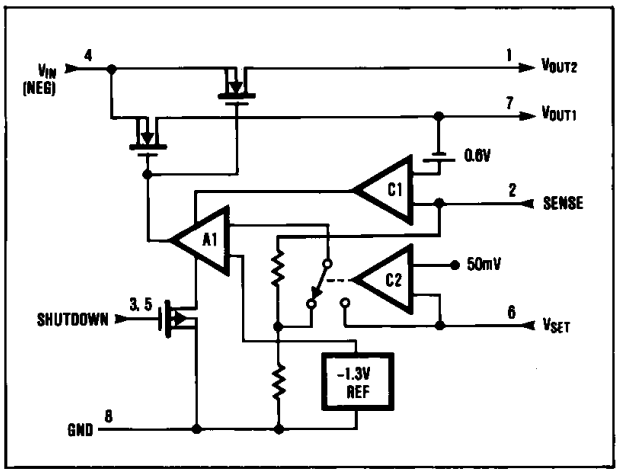

Figure 2. MAX664 Negative Regulator, Block Diagram

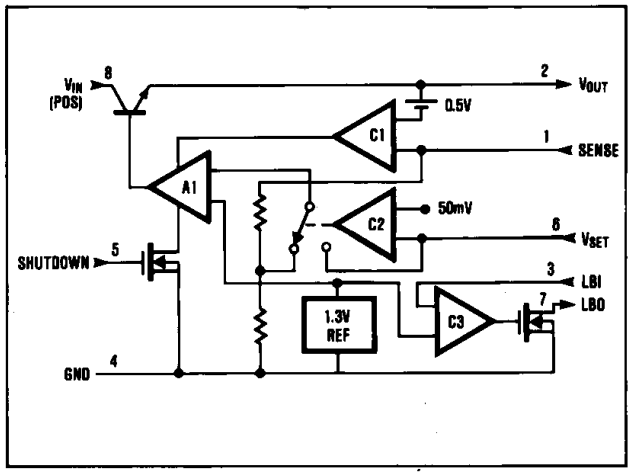

Figure 3. MAX666 Positive Regulator With Low Battery Detector, Block Diagram

Detailed Description

As shown in the block diagrams for each device (Figures 1, 2, and 3), the main elements of the MAX66X family of regulators are a micropower bandgap reference, an error amplifier, and one or two series pass output devices. A P-channel FET and an NPN transistor are used on the MAX663, two N-channel FETs are used in the MAX664 , and one NPN output transistor is used in the MAX666. All regulators also contain two comparators, one for current limiting (C1) and another which selects fixed 5V or adjustable output operation (C2).

The bandgap reference, which is trimmed to 1.30V ±30mV, is internally connected to one input of the error amplifier, A1. The feedback signal from the regulator output is supplied to the A1's other input by either an on-chip voltage divider or by two external resistors. When V_{SET} is grounded the internal divider provides the error amplifier's feedback signal for a fixed 5V output. When V_{SET} is more than 50mV above ground (below ground for the MAX664) the error amplifier's input is switched directly to the V_{SET} pin and external resistors set the output voltage.

Comparator C1 monitors the output current via the SENSE input and shuts down the regulator's output(s) by disabling A1. An external current sense resistor, R_{CL}, sets the limit value. The MAX663 and MAX666 current-limit when the voltage on R_{CL} exceeds 0.5V. The MAX664 current limits at 0.6V.

The MAX663 has an additional amplifier, A2, which provides a temperature-proportional output, V_{TC}. When this is summed into the inverting input of the error amplifier, a negative temperature coefficient results at the output. This is useful when powering liquid crystal displays over wide temperature ranges.

The MAX666 has a third comparator, C3, which compares the LBI input to the internal 1.30V reference. The Low Battery Output, LBO, is an open drain FET connected to Ground. The Low Battery threshold can also be set with a voltage divider at LBI. In addition, all devices also have a SHUTDOWN input which disables the error amplifier and regulator output(s).

Basic Circuit Operation

Figure 4 shows the connections for fixed 5V output positive and negative regulators. The V_{SET} input is grounded and no external resistors are required. Figure 5 shows adjustable output operation with current limiting. The output voltage is set by R1 and R2 and the current limit threshold is set by R_{CL}. V_{OUT} should be connected to SENSE if current limiting is not used and the SHUTDOWN input should be grounded if not used.

Output Voltage Selection

If V_{SET} is not connected to Ground, the output voltage is set by the equation:

$$V_{OUT} = V_{SET} \times \frac{R1 + R2}{R1}, \text{ where } V_{SET} = 1.30V$$

or, to simplify resistor selection:

$$R2 = R1 \times \left(\frac{V_{OUT}}{1.30V} - 1\right)$$

Since the input bias current at V_{SET} has a maximum value of 10nA, relatively large values can be used for R1 and R2 with no loss of accuracy. 1MΩ is a typical value for R1. The tolerance on V_{SET} is guaranteed to be less than ±30mV. This allows the output to be preset without trim pots, using only fixed resistors in most cases.

Dual Mode 5V/Programmable Micropower Voltage Regulators

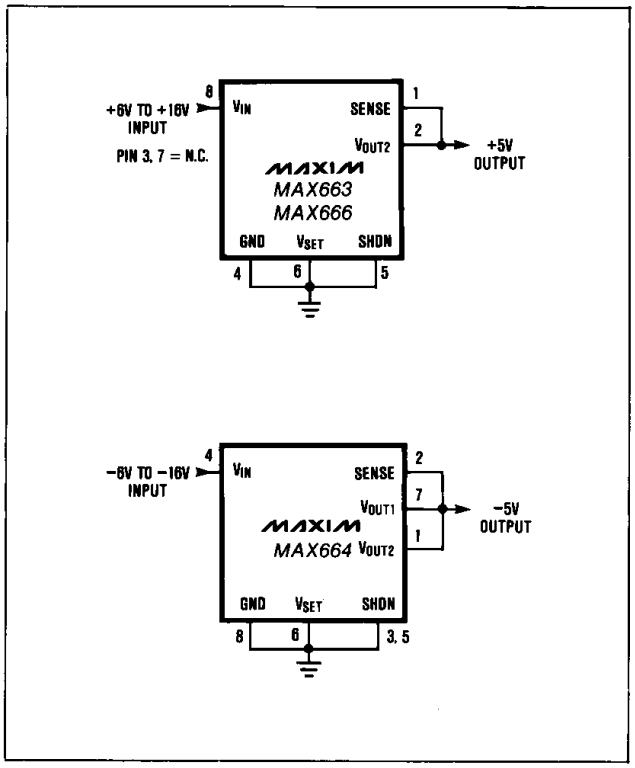

Figure 4. Connections for Fixed 5V Output

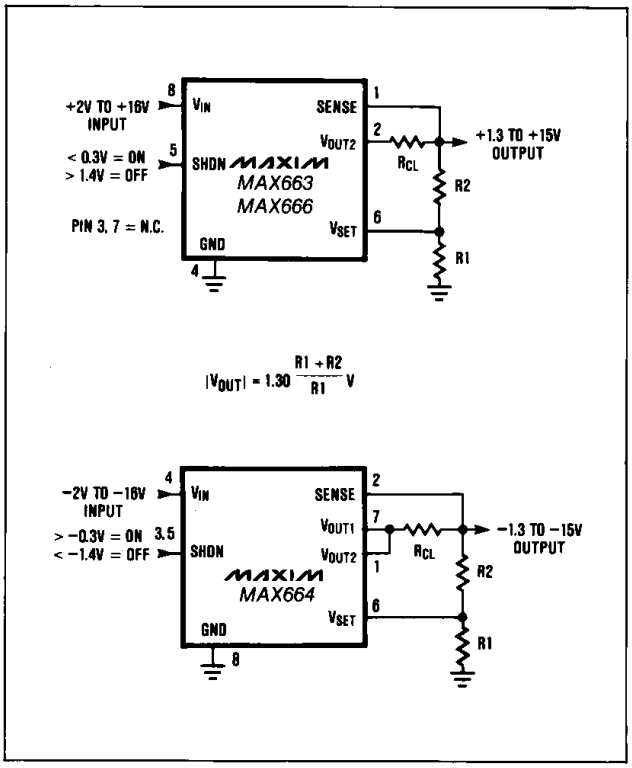

Figure 5. Connections for Adjustable Output

Current Limiting

Internal current limiting is activated on all MAX66X devices when the voltage difference between V_{OUT} and the SENSE input exceeds an internal threshold. The limit value is externally set by R_{CL} using the equation:

$$R_{CL} = \frac{V_{CL}}{I_{CL}}$$

V_{CL} = 0.5V for MAX663 and MAX666
V_{CL} = -0.6V for MAX664
($V_{CL} = V_{OUT} - V_{SENSE}$)

where R_{CL} is the current limit sense resistor and I_{CL} is the maximum current. R_{CL} should be chosen so that neither the 50mA absolute maximum output current specification nor the maximum power dissipation is exceeded.

If current limiting is used, remember that the additional voltage drop across R_{CL} must be considered when determining the regulator's dropout voltage. If current limiting is not used, the SENSE input should be connected to the output(s).

Shutdown Input

The SHUTDOWN input allows the regulator to be turned off with a logic level signal. Since the current drain in shutdown mode is limited to the regulator's quiescent current (12μA Max) this is sometimes desirable in applications where very low power consumption is needed. The SHUTDOWN input should be driven with a CMOS logic level since the input threshold is only 0.3V (-0.3V on the MAX664). In TTL systems, an open-collector driver with a pullup resistor will work with the MAX663/666 if a small collector current is used to keep the output's V_{SAT} below 0.3V. Collector currents as low as 1μA are suitable since the SHUTDOWN pin's input current is less than 10nA. Note that the MAX664's SHUTDOWN input is activated by a negative level. On both positive and negative regulators the SHUTDOWN input should be grounded for normal operation.

Low Battery Detection

The MAX666 contains on-chip circuitry for low battery or low power supply detection. If the voltage at LBI (Low Battery Input, pin 3) falls below the regulator's internal reference (1.30V) then LBO (Low Battery Output, pin 7), an open drain output, goes low. The threshold can be set to any level above the reference voltage by connecting a resistive divider to LBI (Figure 6) based on the equation:

$$R3 = R4 \times \left(\frac{V_{BATT}}{1.30V} - 1\right)$$

where V_{BATT} is the desired threshold of the Low Battery Detector and R3 and R4 are the LBI input divider resistors. Since LBI's input current is no more than 10nA, then R3 and R4 can have high

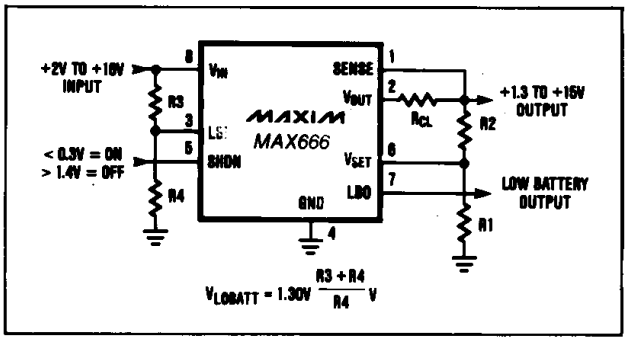

Figure 6. Adjustable Positive Output With Low Battery Detection

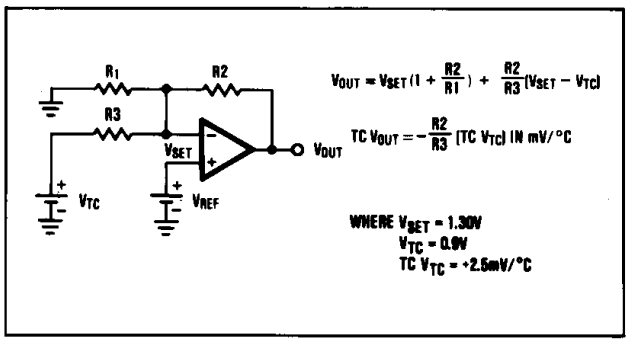

Figure 7. Temperature-Proportional Output Equations, MAX663

values to minimize loading. If, for example, V_{OUT} were 5V, then a 6V low-battery threshold could be set using 10MΩ for R3 and 2.7MΩ for R4. When megohm resistor values are used, special attention should be paid to PC board leakage which can introduce error at the LBI input.

Temperature-Proportional Output

The V_{TC} output (MAX663 only) has a positive temperature coefficient of about +2.5mV/°C. When connected to the summing junction of the error amplifier (V_{SET}) through a resistor, this positive coefficient results in a controllable negative temperature coefficient at the output of the MAX663. At 25°C the voltage at the V_{TC} output is typically 0.9V. Figure 7 shows a simplified diagram of the MAX663 and the equations for setting both the output voltage and the tempco when V_{TC} is used. When not used, V_{TC} should be left unconnected.

Negative output temperature coefficients are most commonly used in multiplexed LCD modules or display systems to compensate for the inherent negative tempco of the LCD threshold. Figure 8 shows a MAX663 generating a temperature compensated V_{DISP} for the Maxim ICM7233 triplexed LCD display driver.

Application Hints

Input-Output (Dropout) Voltage

A regulator's minimum input-output differential, or dropout voltage, determines the lowest usable input voltage. In battery powered systems this will determine the useful end-of-life battery voltage. The MAX663 and MAX666 have a dropout voltage of 1V at full output. This means that as 5V regulators, for example, they will provide a regulated 5V output at 40mA as long as the input voltage is 6V or greater.

For low current applications (I_{OUT} < 5mA) the MAX663 can operate with input-output differentials below 1V when V_{OUT1} is used. The dropout voltage will then depend on the P-channel output FET's saturation resistance multiplied by the load current (see MAX663 Electrical Specifications, R_{SAT}).

The MAX664 (negative output) uses two N-channel FETs as output devices so its dropout voltage is also a function of R_{SAT} times its load current (see Electrical Specifications).

Output Connections

When using V_{OUT1} on the MAX663 for low current, low dropout applications, V_{OUT2} and V_{OUT1} must be connected together since the current limit circuitry is referenced only to V_{OUT2} (Figure 1). V_{OUT2} does not supply load current in this configuration since the base of the NPN output transistor is shorted by the output connection. For high current operation V_{OUT2} should be used alone and V_{OUT1} should be left unconnected. V_{OUT1} is not provided on the MAX666. On the MAX664, V_{OUT1} and V_{OUT2} should always be connected together for proper operation and lowest dropout voltage.

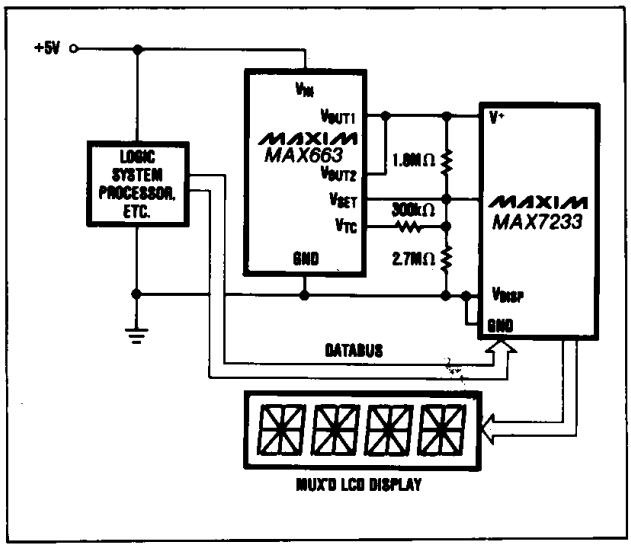

Figure 8. Driving a Multiplexed LCD Display. Consistent operation over more than 40°C temperature span, as opposed to about 10°C with fixed drive voltage, is allowed by negative temperature coefficient drive voltage to the displays. Based on EPSON LDB-728 Display or equivalent.

Dual Mode 5V/Programmable Micropower Voltage Regulators

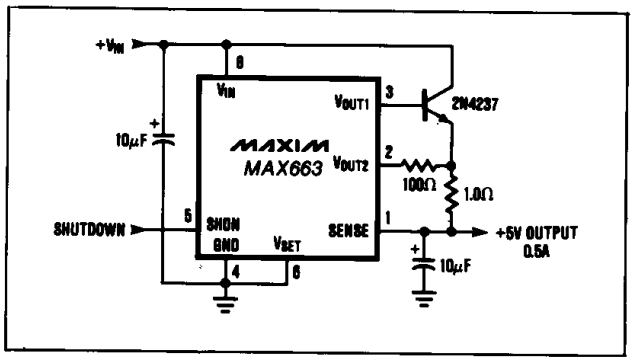

Figure 9. Positive Regulator With Boosted Output, Current Limit, and Low I_Q Shutdown

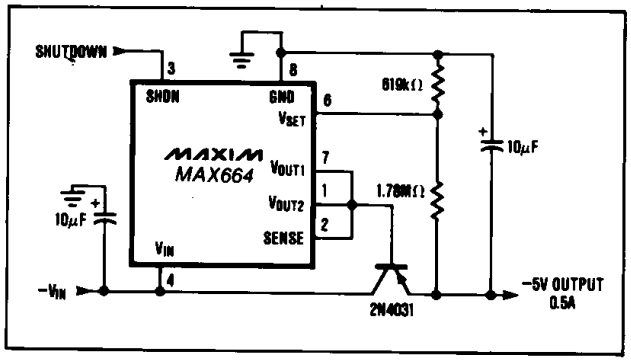

Figure 10. Negative Regulator With Boosted Output and Low I_Q Shutdown

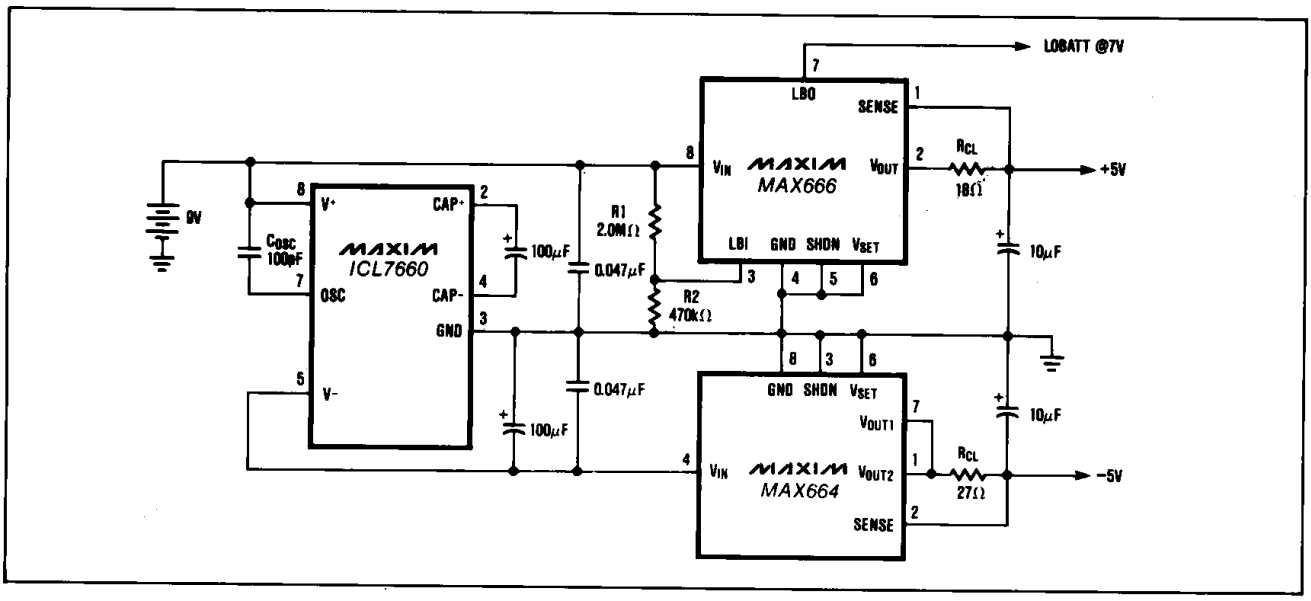

Figure 11. ±5V Power Supply Using One 9V Battery

Bypass Capacitors

The MAX66X series of CMOS regulators is designed primarily for low quiescent current battery powered systems and has limited line and load regulation at frequencies above 10Hz. The high frequency performance is easily improved by adding an output filter capacitor across the load. 10µF is a good typical value. If high frequency performance is not an issue then an output bypass capacitor is not required.

In battery powered systems an input capacitor helps to reduce noise, improve dynamic performance, and reduce the input rate-of-rise at the regulator's input. In extreme cases excessive voltage rate-of-rise at the inputs of CMOS devices can cause SCR latch-up. The low impedance of Ni-Cad and Lead-Acid batteries make this possible when they are switched directly to the regulator input with no current limiting resistance, inductance, or input filtering. The addition of a 0.1µF or greater input capacitor limits the input rate-of-rise to a safe level.

Chip Topography

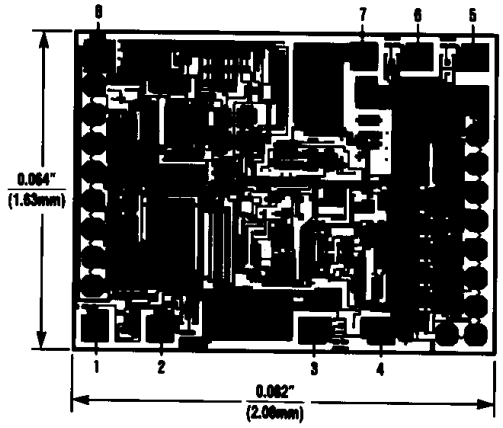

(See Pin Configurations (front page) for pin functions)

Maxim cannot assume responsibility for use of any circuitry other than circuitry entirely embodied in a Maxim product. No circuit patent licenses are implied. Maxim reserves the right to change the circuitry and specifications without notice at any time.

© 1996 Maxim Integrated Products Printed USA MAXIM is a registered trademark of Maxim Integrated Products.