DS1100L
3.3V 5-Tap Economy Timing Element (Delay Line)

GENERAL DESCRIPTION

The DS1100L is a 3.3V version of the DS1100. It is characterized for operation over the range 3.0V to 3.6V. The DS1100L series delay lines have five equally spaced taps providing delays from 4ns to 500ns. These devices are offered in surface-mount packages to save PCB area. Low cost and superior reliability over hybrid technology is achieved by the combination of a 100% silicon delay line and industry-standard µMAX® and SO packaging. The DS1100L 5-tap silicon delay line reproduces the input-logic state at the output after a fixed delay as specified by the extension of the part number after the dash. The DS1100L is designed to reproduce both leading and trailing edges with equal precision. Each tap is capable of driving up to 10 74LS loads.

Maxim Integrated can customize standard products to meet special needs.

µMAX is a registered trademark of Maxim Integrated Products, Inc.

FEATURES

- All-Silicon Timing Circuit
- Five Taps Equally Spaced
- Delays are Stable and Precise
- Both Leading- and Trailing-Edge Accuracy
- 3.3V Version of the DS1100
- Low-Power CMOS
- TTL-/CMOS-Compatible
- Vapor-Phase and IR Solderable
- Custom Delays Available
- Fast-Turn Prototypes
- Delays Specified Over Both Commercial and Industrial Temperature Ranges

PIN ASSIGNMENT

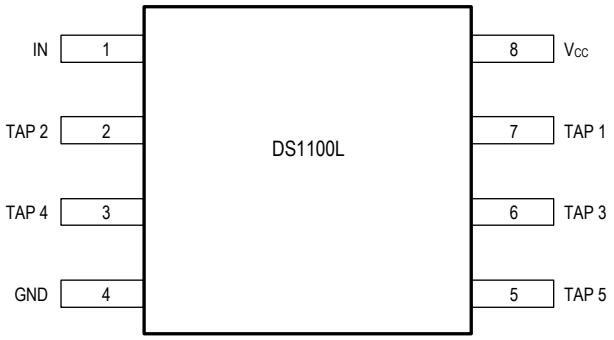

DS1100LZ SO (150mils)
DS1100LU µMAX

PIN DESCRIPTION

TAP 1 to TAP 5	- TAP Output Number
V_{CC}	- +3.3V
GND	- Ground
IN	- Input

19-5736; Rev 7/15

ABSOLUTE MAXIMUM RATINGS

Voltage Range on Any Pin Relative to Ground ..... -0.5V to +6.0V
Short-Circuit Output Current..... 50mA for 1s
Continuous Power Dissipation (T_A = +70°C)
SO (derate 5.9mW/°C above +70°C) 470.6mW
µMAX (derate 4.5mW/°C above +70°C 362mW
Operating Temperature Range ..... -40°C to +85°C
Storage Temperature Range ..... -55°C to +125°C
Lead Temperature (soldering, 10s)..... +300°C
Soldering Temperature (reflow)
Lead(Pb)-free ..... +260°C
Containing lead(Pb)..... +240°C

This is a stress rating only and functional operation of the device at these or any other conditions above those indicated in the operation sections of this specification is not implied. Exposure to absolute maximum rating conditions for extended periods of time may affect device reliability.

DC ELECTRICAL CHARACTERISTICS

(V_{CC} = 3.0V to 3.6V; T_A = -40°C to +85°C, unless otherwise noted.)

PARAMETER	SYMBOL	CONDITIONS	MIN	TYP	MAX	UNITS	NOTES
Supply Voltage	V_{CC}		3.0	3.3	3.6	V	5
High-Level Input Voltage	V_{IH}		2.0		V_{CC} + 0.3	V	5
Low-Level Input Voltage	V_{IL}		-0.3		0.8	V	5
Input-Leakage Current	I_I	$0.0V \le V_I \le V_{CC}$	-1.0		+1.0	µA	
Active Current	I_{CC}	V_{CC} = Max; Freq. = 1MHz		10		mA	6, 8
High-Level Output Current	I_{OH}	V_{CC} = Min. V_{OH} = 2.3			-1	mA	
Low-Level Output Current	I_{OL}	V_{CC} = Min. V_{OL} = 0.5	8			mA	

AC ELECTRICAL CHARACTERISTICS

(V_{CC} = 3.0V to 3.6V; T_A = -40°C to +85°C, unless otherwise noted.)

PARAMETER	SYMBOL	CONDITIONS	MIN	TYP	MAX	UNITS	NOTES
Input Pulse Width	t_{WI}		20% of Tap 5 t_{PLH}			ns	9
Input-to-Tap Delay Tolerance (Delays ≤ 40ns)	t_{PLH}, t_{PHL}	+25°C 3.3V	-2	Table 1	+2	ns	1, 3, 4, 7, 10
		0°C to +70°C	-3	Table 1	+3	ns	1, 2, 3, 4, 7, 10
		-40°C to +85°C	-4	Table 1	+4	ns	1, 2, 3, 4, 7, 10
Input-to-Tap Delay Tolerance (Delays > 40ns)	t_{PLH}, t_{PHL}	+25°C 3.3V	-5	Table 1	+5	%	1, 3, 4, 7, 10
		0°C to +70°C	-8	Table 1	+8	%	1, 2, 3, 4, 7, 10
		-40°C to +85°C	-13	Table 1	+13	%	1, 2, 3, 4, 7, 10
Output Rise or Fall Time	t_{OF}, t_{OR}			2.0	2.5	ns	
Power-Up Time	t_{PU}				200	µs	
Input Period	Period		$2(t_{WI})$			ns	9

CAPACITANCE

(T_A = +25°C, unless otherwise noted.)

PARAMETER	SYMBOL	CONDITIONS	MIN	TYP	MAX	UNITS	NOTES
Input Capacitance	C_{IN}			5	10	pF	

NOTES:

1) Initial tolerances are ± with respect to the nominal value at +25°C and V_{CC} = 3.3V for both leading and trailing edge.
2) Temperature and voltage tolerance is with respect to the nominal delay value over the stated temperature range, and a supply-voltage range of 3.0V to 3.6V.
3) All tap delays tend to vary unidirectionally with temperature or voltage changes. For example, if TAP 1 slows down, all other taps also slow down; TAP 3 can never be faster than TAP 2.
4) Intermediate delay values are available on a custom basis. For further information, contact the factory at custom.oscillators@maximintegrated.com.
5) All voltages are referenced to ground.
6) Measured with outputs open.
7) See *Test Conditions* section at the end of this data sheet.
8) Frequencies higher than 1MHz result in higher I_{CC} values.
9) At or near maximum frequency the delay accuracy can vary and will be application sensitive (i.e., decoupling, layout).
10) The "-75" version is specified and tested with an additional 2ns of tolerance on the specified minimum input-to-tap delay tolerance parameters for TAP 1 to TAP 3. Delay values for TAP 4 to TAP 5 meet data sheet specifications.

Figure 1. LOGIC DIAGRAM

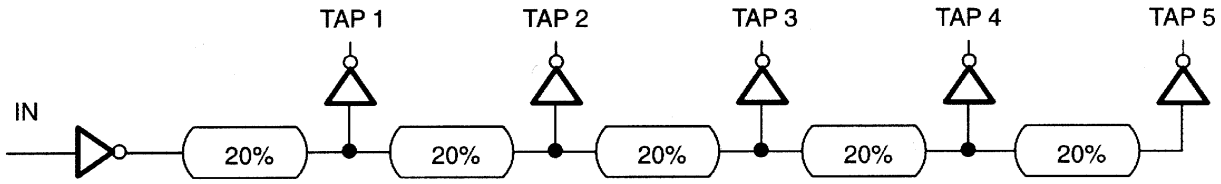

Figure 2. TIMING DIAGRAM: SILICON DELAY LINE

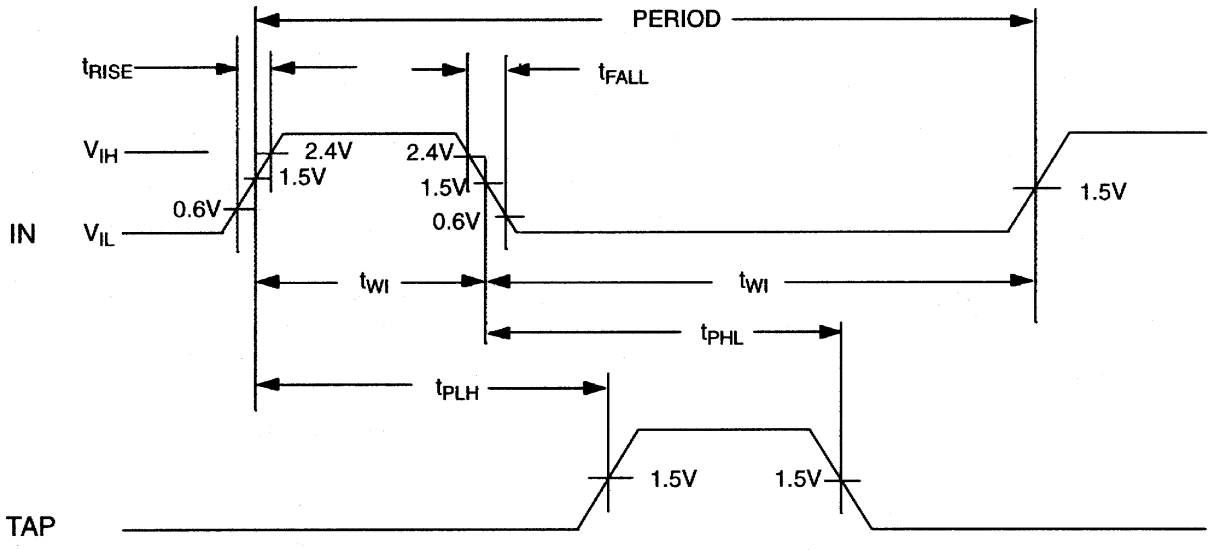

TERMINOLOGY

Period: The time elapsed between the leading edge of the first pulse and the leading edge of the following pulse.

t_{WI} (Pulse Width): The elapsed time on the pulse between the 1.5V point on the leading edge and the 1.5V point on the trailing edge or the 1.5V point on the trailing edge and the 1.5V point on the leading edge.

t_{RISE} (Input Rise Time): The elapsed time between the 20% and the 80% point on the leading edge of the input pulse.

t_{FALL} (Input Fall Time): The elapsed time between the 80% and the 20% point on the trailing edge of the input pulse.

t_{PLH} (Time Delay, Rising): The elapsed time between the 1.5V point on the leading edge of the input pulse and the 1.5V point on the leading edge of any tap output pulse.

t_{PHL} (Time Delay, Falling): The elapsed time between the 1.5V point on the trailing edge of the input pulse and the 1.5V point on the trailing edge of any tap output pulse.

TEST SETUP DESCRIPTION

Figure 3 illustrates the hardware configuration used for measuring the timing parameters on the DS1100L. The input waveform is produced by a precision pulse generator under software control. Time delays are measured by a time interval counter (20ps resolution) connected between the input and each tap. Each tap is selected and connected to the counter by a VHF switch control unit. All measurements are fully automated, with each instrument controlled by a central computer over an IEEE 488 bus.

TEST CONDITIONS INPUT:

Ambient Temperature:	25°C ±3°C
Supply Voltage (V_{CC}):	3.3V ±0.1V
Input Pulse:	High = 3.0V ±0.1V
	Low = 0.0V ±0.1V
Source Impedance:	50Ω max
Rise and Fall Time:	3.0ns max (measured between 10% and 90%)
Pulse Width:	500ns (1µs for -500 version)
Period:	1µs (2µs for -500 version)

OUTPUT:

Each output is loaded with the equivalent of one 74F04 input gate. Delay is measured at the 1.5V level on the rising and falling edge.

Note: Above conditions are for test only and do not restrict the operation of the device under other data sheet conditions.

Figure 3. TEST CIRCUIT

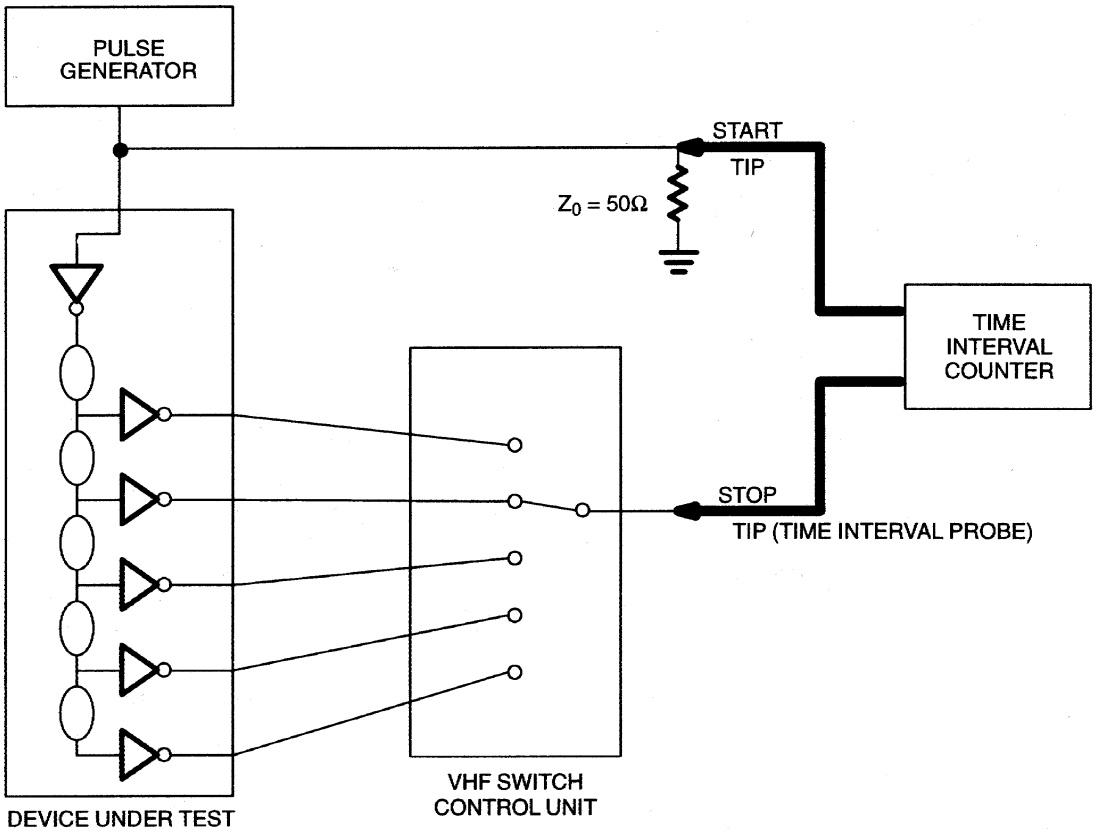

Table 1. DS1100L PART NUMBER DELAY

PART	NOMINAL DELAYS (ns)				
DS1100L-xxx	TAP 1	TAP 2	TAP 3	TAP 4	TAP 5
-20	4	8	12	16	20
-25	5	10	15	20	25
-30	6	12	18	24	30
-35	7	14	21	28	35
-40	8	16	24	32	40
-45	9	18	27	36	45
-50	10	20	30	40	50
-60	12	24	36	48	60
-75	15	30	45	60	75
-100	20	40	60	80	100
-125	25	50	75	100	125
-150	30	60	90	120	150
-175	35	70	105	140	175
-200	40	80	120	160	200
-250	50	100	150	200	250
-300	60	120	180	240	300
-500	100	200	300	400	500

ORDERING INFORMATION

PART	TEMP RANGE	PIN-PACKAGE
DS1100LZ-xxx	-40°C to +85°C	8 SO
DS1100LZ-xxx/T&R	-40°C to +85°C	8 SO
DS1100LZ-xxx+	-40°C to +85°C	8 SO
DS1100LZ-xxx+T	-40°C to +85°C	8 SO
DS1100LU-xxx	-40°C to +85°C	8 µMAX
DS1100LU-xxx/T&R	-40°C to +85°C	8 µMAX
DS1100LU-xxx+	-40°C to +85°C	8 µMAX
DS1100LU-xxx+T	-40°C to +85°C	8 µMAX

xxx *Denotes total time delay (ns) (see Table 1).*
+Denotes a lead(Pb)-free/RoHS-compliant package.
T&R and T = Tape and reel.

PACKAGE INFORMATION

For the latest package outline information and land patterns (footprints), go to **www.maximintegrated.com/packages**. Note that a "+", "#", or "-" in the package code indicates RoHS status only. Package drawings may show a different suffix character, but the drawing pertains to the package regardless of RoHS status.

PACKAGE TYPE	PACKAGE CODE	OUTLINE NO.	LAND PATTERN NO.
8 SO (150 mils)	S8+4	**21-0041**	**90-0096**
8 µMAX	U8+1	**21-0036**	**90-0092**

REVISION HISTORY

REVISION DATE	DESCRIPTION	PAGES CHANGED
3/11	Changed µSOP package type to µMAX; updated the *Absolute Maximum Ratings* section; added the customer support email address to the electrical characteristics Note 4; added the *Ordering Information* and *Package Information* tables	1–6
10/11	Added continuous power dissipation numbers to the *Absolute Maximum Ratings* section; added Note 10 to the Input-to-Tap Delay Tolerance (Delays ≤ 40ns) parameter in the *AC Electrical Characteristics* table	2, 3
7/15	Revised Note 10 and revised *AC Electrical Characteristics* table	2, 3

Maxim Integrated cannot assume responsibility for use of any circuitry other than circuitry entirely embodied in a Maxim Integrated product. No circuit patent licenses are implied. Maxim Integrated reserves the right to change the circuitry and specifications without notice at any time. The parametric values (min and max limits) shown in the Electrical Characteristics table are guaranteed. Other parametric values quoted in this data sheet are provided for guidance.

Maxim Integrated 160 Rio Robles, San Jose, CA 95134 USA 1-408-601-1000

© 2015 Maxim Integrated Products, Inc. Maxim Integrated and the Maxim Integrated logo are trademarks of Maxim Integrated Products, Inc.