DS1338
I²C RTC with 56-Byte NV RAM

GENERAL DESCRIPTION

The DS1338 serial real-time clock (RTC) is a low-power, full binary-coded decimal (BCD) clock/calendar plus 56 bytes of NV SRAM. Address and data are transferred serially through an I²C interface. The clock/calendar provides seconds, minutes, hours, day, date, month, and year information. The end of the month date is automatically adjusted for months with fewer than 31 days, including corrections for leap year. The clock operates in either the 24-hour or 12-hour format with AM/PM indicator. The DS1338 has a built-in power-sense circuit that detects power failures and automatically switches to the backup supply, maintaining time and date operation

APPLICATIONS

Handhelds (GPS, POS Terminal)
Consumer Electronics (Set-Top Box, Digital Recording, Network Appliance)
Office Equipment (Fax/Printer, Copier)
Medical (Glucometer, Medicine Dispenser)
Telecommunications (Router, Switcher, Server)
Other (Utility Meter, Vending Machine, Thermostat, Modem)

UL is a registered trademark of Underwriters Laboratories Inc.

TYPICAL OPERATING CIRCUIT

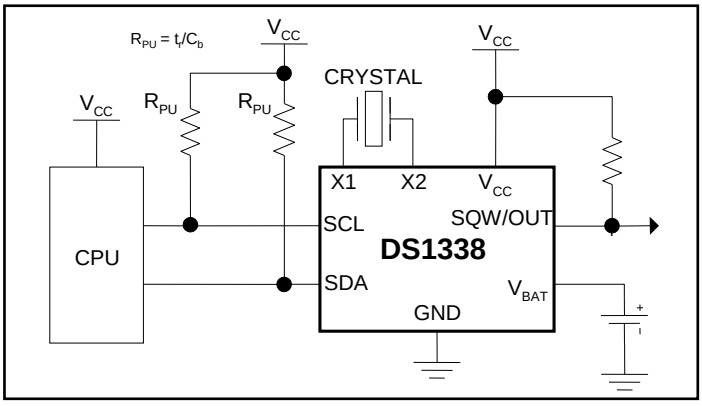

Pin Configurations appear at end of data sheet.

BENEFITS AND FEATURES

- **Completely Manages All Timekeeping Functions**
  - **RTC Counts Seconds, Minutes, Hours, Date of the Month, Month, Day of the Week, and Year with Leap-Year Compensation Valid Up to 2100**
  - **56-Byte, Battery-Backed, General-Purpose RAM with Unlimited Writes**
  - **Programmable Square-Wave Output Signal**
- **Surface-Mount Package with an Integrated Crystal (DS1338C) Saves Additional Space and Simplifies Design**
- **Interfaces with Most Microcontrollers**
  - **I²C Serial Interface**
- **Low-Power Operation Extends Battery Backup Run Time**
  - **Automatic Power-Fail Detect and Switch Circuitry**
- **-40°C to +85°C Industrial Temperature Range Supports Operation in a Wide Range of Applications**
- **Underwriters Laboratories (UL®) Recognized**

ORDERING INFORMATION

PART	TEMP RANGE	PIN-PACKAGE	TOP MARK†
DS1338Z-18+	-40°C to +85°C	8 SO (0.150″)	DS1338-18
DS1338Z-3+	-40°C to +85°C	8 SO (0.150″)	DS1338-3
DS1338Z-33+	-40°C to +85°C	8 SO (0.150″)	DS133833
DS1338U-18+	-40°C to +85°C	8 µSOP	1338 rr-18
DS1338U-3+	-40°C to +85°C	8 µSOP	1338 rr-3
DS1338U-33+	-40°C to +85°C	8 µSOP	1338 rr-33
DS1338C-18#	-40°C to +85°C	16 SO (0.300″)	DS1338C-18
DS1338C-3#	-40°C to +85°C	16 SO (0.300″)	DS1338C-3
DS1338C-33#	-40°C to +85°C	16 SO (0.300″)	DS1338C-33

rr = second line, revision level
+ Denotes a lead(Pb)-free/RoHS-compliant device.
 # Denotes a RoHS-compliant device that may include lead that is exempt under the RoHS requirements. The lead finish is JESD97 category e3, and is compatible with both lead-based and lead-free soldering processes.
† A "+" anywhere on the top mark denotes a lead-free device. A "#" denotes a RoHS-compliant device.

19-6019; Rev 4/15

ABSOLUTE MAXIMUM RATINGS

Voltage Range on Any Pin Relative to Ground……..-0.3V to +6.0V
Operating Temperature Range……-40°C to +85°C
Storage Temperature Range……..-55°C to +125°C
Lead Temperature (soldering, 10s) …… +260°C
Soldering Temperature (reflow) …… +260°C

Stresses beyond those listed under "Absolute Maximum Ratings" may cause permanent damage to the device. These are stress ratings only, and functional operation of the device at these or any other conditions beyond those indicated in the operational sections of the specifications is not implied. Exposure to the absolute maximum rating conditions for extended periods may affect device reliability.

RECOMMENDED DC OPERATING CONDITIONS

(V_{CC} = $V_{CC(MIN)}$ to $V_{CC(MAX)}$, T_A = -40°C to +85°C, unless otherwise noted. Typical values are at T_A = +25°C, unless otherwise noted.) (Note 1)

PARAMETER	SYMBOL	CONDITIONS	MIN	TYP	MAX	UNITS
Supply Voltage	V_{CC}	DS1338-18	1.71	1.8	5.5	V
		DS1338-3	2.7	3.0	5.5	
		DS1338-33	3.0	3.3	5.5	
Logic 1	V_{IH}	(Note 2)	0.7 x V_{CC}		V_{CC} + 0.3	V
Logic 0	V_{IL}	(Note 2)	-0.3		+0.3 x V_{CC}	V
Power-Fail Voltage	V_{PF}	DS1338-18	1.51	1.62	1.71	V
		DS1338-3	2.45	2.59	2.70	
		DS1338-33	2.70	2.82	2.97	
V_{BAT} Input Voltage	V_{BAT}	(Note 2)	1.3	3.0	3.7	V

DC ELECTRICAL CHARACTERISTICS

(V_{CC} = $V_{CC(MIN)}$ to $V_{CC(MAX)}$, T_A = -40°C to +85°C, unless otherwise noted. Typical values are at V_{CC} = TYP, T_A = +25°C, unless otherwise noted.) (Note 1)

PARAMETER	SYMBOL	CONDITIONS		MIN	TYP	MAX	UNITS
Input Leakage	I_{LI}	(Note 3)				1	µA
I/O Leakage	I_{LO}	(Note 4)				1	µA
SDA Logic 0 Output	I_{OLSDA}	V_{CC} > 2V; V_{OL} = 0.4V				3.0	mA
		V_{CC} < 2V; V_{OL} = 0.2 x V_{CC}				3.0	
SQW/OUT Logic 0 Output	I_{OLSQW}	V_{CC} > 2V; V_{OL} = 0.4V				3.0	mA
		1.71V < V_{CC} < 2V; V_{OL} = 0.2 x V_{CC}				3.0	
		1.3V < V_{CC} < 1.71V; V_{OL} = 0.2 x V_{CC}				250	µA
Active Supply Current (Note 5)	I_{CCA}	DS1338-18:	V_{CC} = 1.89V		75	150	µA
		DS1338-3:	V_{CC} = 3.30V		110	200	
		DS1338-33	V_{CC} = 3.63V		120	200	
			V_{CC} = 5.5V			325	
Standby Current (Note 6)	I_{CCS}	DS1338-18:	V_{CC} = 1.89V		60	100	µA
		DS1338-3:	V_{CC} = 3.30V		80	125	
		DS1338-33	V_{CC} = 3.63V		85	125	
			V_{CC} = 5.5V			200	
V_{BAT} Leakage Current (V_{CC} Active)	I_{BATLKG}				25	100	nA

DC ELECTRICAL CHARACTERISTICS

(**V_{CC} = 0V, T_A = -40°C to +85°C**, unless otherwise noted. Typical values are at V_{BAT} = 3.0V, T_A = +25°C, unless otherwise noted.) (Note 1)

PARAMETER	SYMBOL	MIN	TYP	MAX	UNITS
V_{BAT} Current (OSC ON); V_{BAT} = 3.7V, SQW/OUT OFF (Note 7)	$I_{BATOSC1}$		800	1200	nA
V_{BAT} Current (OSC ON); V_{BAT} = 3.7V, SQW/OUT ON (32kHz) (Note 7)	$I_{BATOSC2}$		1025	1400	nA
V_{BAT} Data-Retention Current (Osc Off); V_{BAT} = 3.7V (Note 7)	I_{BATDAT}		10	100	nA

AC ELECTRICAL CHARACTERISTICS

(V_{CC} = $V_{CC(MIN)}$ to $V_{CC(MAX)}$, T_A = -40°C to +85°C) (Note 1)

PARAMETER	SYMBOL	CONDITION	MIN	TYP	MAX	UNITS
SCL Clock Frequency	f_{SCL}	Fast mode	100		400	kHz
		Standard mode	0		100	
Bus Free Time Between STOP and START Condition	t_{BUF}	Fast mode	1.3			µs
		Standard mode	4.7			
Hold Time (Repeated) START Condition (Note 8)	$t_{HD:STA}$	Fast mode	0.6			µs
		Standard mode	4.0			
LOW Period of SCL Clock	t_{LOW}	Fast mode	1.3			µs
		Standard mode	4.7			
HIGH Period of SCL Clock	t_{HIGH}	Fast mode	0.6			µs
		Standard mode	4.0			
Setup Time for Repeated START Condition	$t_{SU:STA}$	Fast mode	0.6			µs
		Standard mode	4.7			
Data Hold Time (Notes 9, 10)	$t_{HD:DAT}$	Fast mode	0		0.9	µs
		Standard mode	0			
Data Setup Time (Note 11)	$t_{SU:DAT}$	Fast mode	100			ns
		Standard mode	250			
Rise Time of Both SDA and SCL Signals (Note 12)	t_R	Fast mode	20 + 0.1C_B		300	ns
		Standard mode	20 + 0.1C_B		1000	
Fall Time of Both SDA and SCL Signals (Note 12)	t_F	Fast mode	20 + 0.1C_B		300	ns
		Standard mode	20 + 0.1C_B		300	
Setup Time for STOP Condition	$t_{SU:STO}$	Fast mode	0.6			µs
		Standard mode	4.0			
Capacitive Load for Each Bus Line	C_B	(Note 12)			400	pF
I/O Capacitance (SDA, SCL)	$C_{I/O}$	(Note 13)			10	pF
Oscillator Stop Flag (OSF) Delay	t_{OSF}	(Note 14)		100		ms

POWER-UP/POWER-DOWN CHARACTERISTICS

(T_A = -40°C to +85°C) (Note 1, Figure 1)

PARAMETER	SYMBOL	MIN	TYP	MAX	UNITS
Recovery at Power-Up (Note 15)	t_{REC}			2	ms
V_{CC} Fall Time; $V_{PF(MAX)}$ to $V_{PF(MIN)}$	t_{VCCF}	300			µs
V_{CC} Rise Time; $V_{PF(MIN)}$ to $V_{PF(MAX)}$	t_{VCCR}	0			µs

Warning: Negative undershoots below -0.3V while the part is in battery-backed mode may cause loss of data.

Note 1: Limits at -40°C are guaranteed by design and not production tested.
Note 2: All voltages are referenced to ground.
Note 3: SCL only.
Note 4: SDA and SQW/OUT.
Note 5: I_{CCA}—SCL clocking at max frequency = 400kHz.
Note 6: Specified with the I^2C bus inactive.
Note 7: Measured with a 32.768kHz crystal attached to X1 and X2.
Note 8: After this period, the first clock pulse is generated.
Note 9: A device must internally provide a hold time of at least 300ns for the SDA signal (referred to the $V_{IH(MIN)}$ of the SCL signal) to bridge the undefined region of the falling edge of SCL.
Note 10: The maximum $t_{HD:DAT}$ need only be met if the device does not stretch the LOW period (t_{LOW}) of the SCL signal.
Note 11: A fast-mode device can be used in a standard-mode system, but the requirement $t_{SU:DAT} \geq$ to 250ns must then be met. This is automatically the case if the device does not stretch the LOW period of the SCL signal. If such a device does stretch the LOW period of the SCL signal, it must output the next data bit to the SDA line $t_{R(MAX)} + t_{SU:DAT} = 1000 + 250 = 1250$ns before the SCL line is released.
Note 12: C_B—total capacitance of one bus line in pF.
Note 13: Guaranteed by design. Not production tested.
Note 14: The parameter t_{OSF} is the time period the oscillator must be stopped for the OSF flag to be set over the voltage range of $0.0V \leq V_{CC} \leq V_{CC(MAX)}$ and $1.3V \leq V_{BAT} \leq 3.7V$.
Note 15: This delay applies only if the oscillator is enabled and running. If the oscillator is disabled or stopped, no power-up delay occurs.

Figure 1. Power-Up/Power-Down Timing

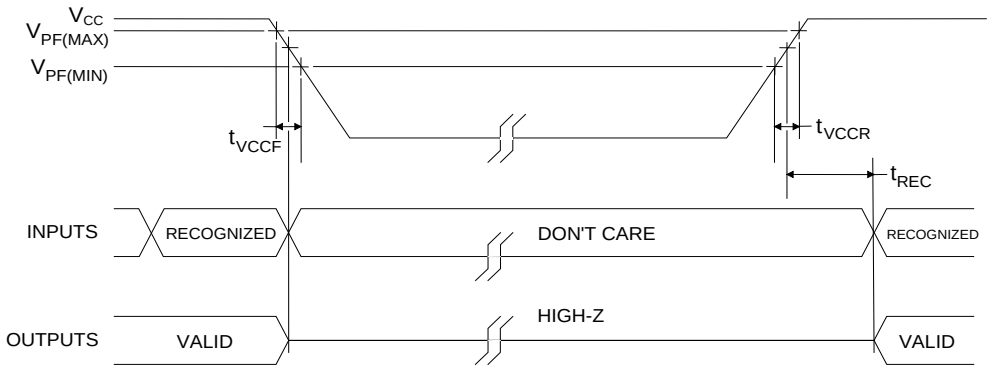

Figure 2. Timing Diagram

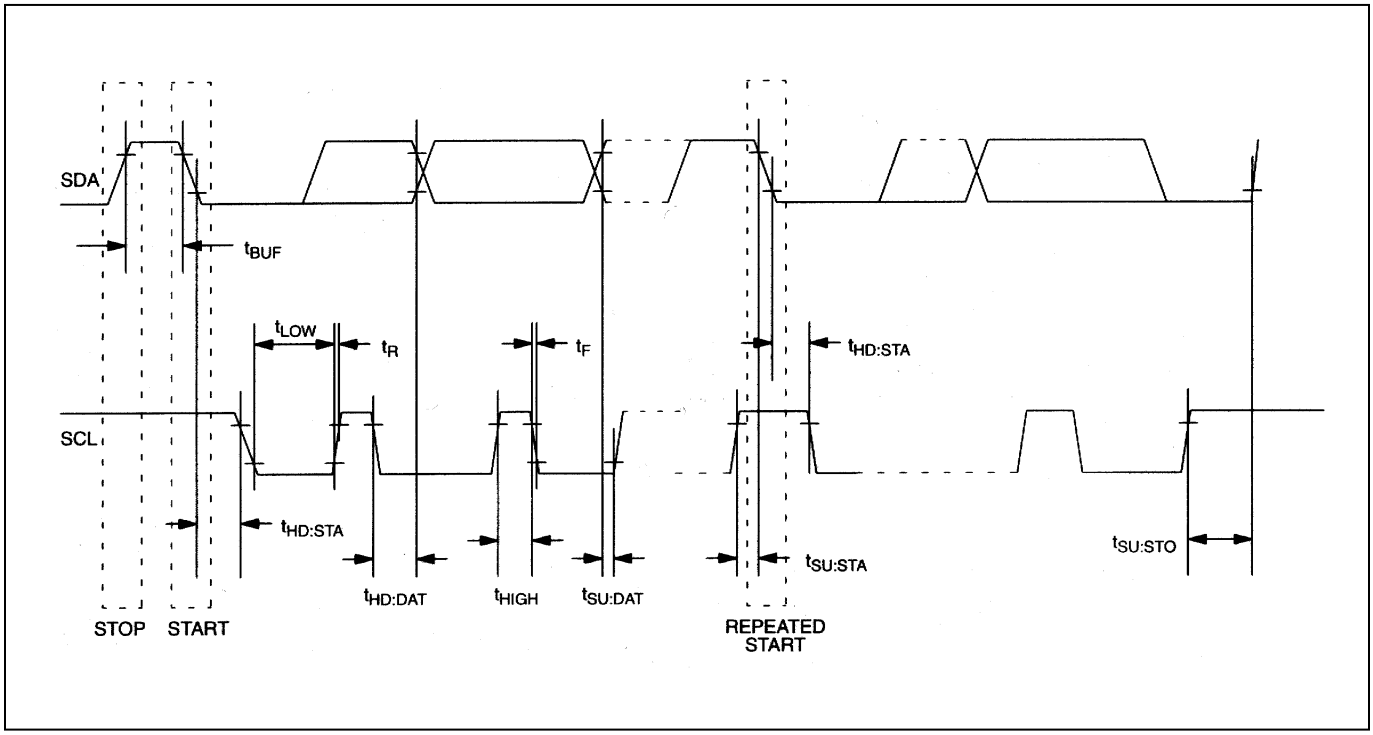

Figure 3. Block Diagram

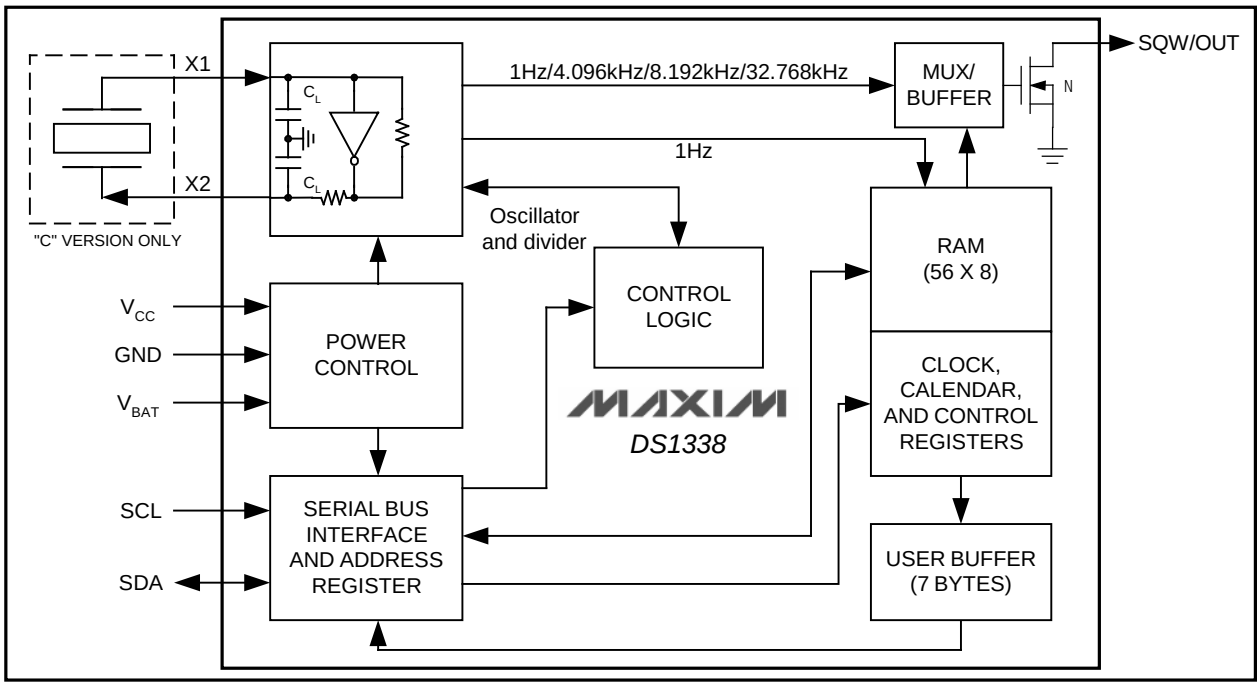

TYPICAL OPERATING CHARACTERISTICS

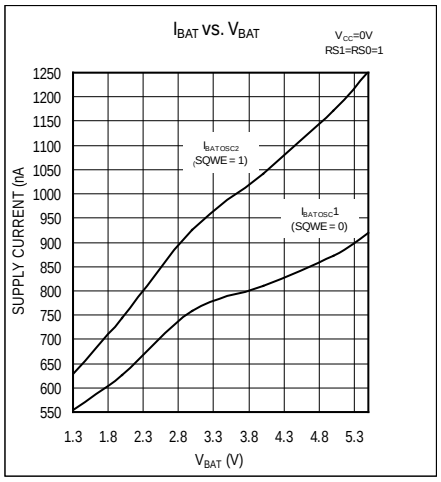

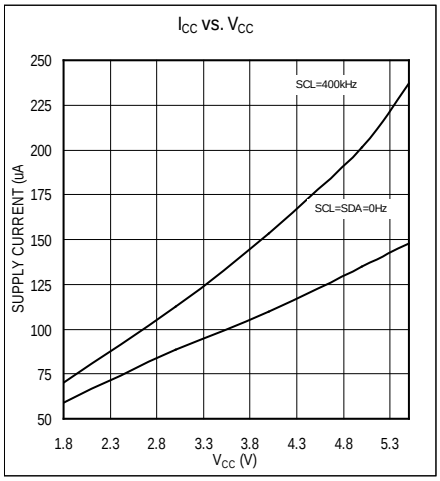

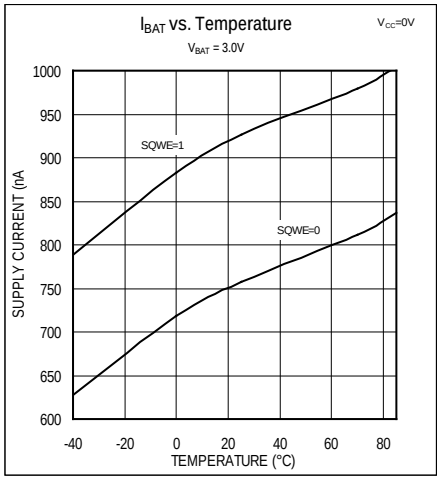

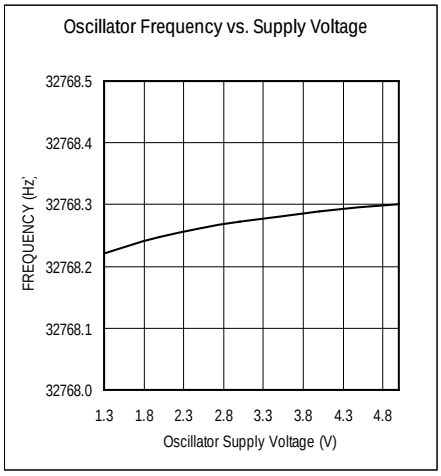

PIN DESCRIPTION

PIN		NAME	FUNCTION
8	16		
1	—	X1	32.768kHz Crystal Connections. The internal oscillator circuitry is designed for operation with a crystal having a specified load capacitance (C_L) of 12.5pF. An external 32.768kHz oscillator can also drive the DS1338. In this configuration, the X1 pin is connected to the external oscillator signal and the X2 pin is left unconnected. ***Note:*** *For more information about crystal selection and crystal layout considerations, refer to* Application Note 58: Crystal Considerations with Dallas Real-Time Clocks.
2	—	X2	
3	14	V_{BAT}	Backup Supply Input for Lithium Cell or Other Energy Source. Battery voltage must be held between the minimum and maximum limits for proper operation. Diodes placed in series between the backup source and the V_{BAT} pin may prevent proper operation. If a backup supply is not required, V_{BAT} must be grounded. UL recognized to ensure against reverse charging when used with a lithium cell. For more information, visit www.maxim-ic.com/qa/info/ul.
4	15	GND	Ground. DC power is provided to the device on these pins. V_{CC} is the primary power input. When voltage is applied within normal limits, the device is fully accessible and data can be written and read. When a backup supply is connected to the device and V_{CC} is below V_{PF}, reads and writes are inhibited. However, the timekeeping function continues unaffected by the lower input voltage.
5	16	SDA	Serial Data. Input/output pin for the I^2C serial interface. It is an open drain output and requires an external pullup resistor. The pull up voltage may be up to 5.5V regardless of the voltage on V_{CC}.
6	1	SCL	Serial Clock. Input pin for the I^2C serial interface. Used to synchronize data movement on the serial interface. The pull up voltage may be up to 5.5V regardless of the voltage on V_{CC}.
7	2	SQW/OUT	Square-Wave/Output Driver. When enabled and the SQWE bit set to 1, the SQW/OUT pin outputs one of four square-wave frequencies (1Hz, 4kHz, 8kHz, 32kHz). It is an open drain output and requires an external pullup resistor. Operates with either V_{CC} or V_{BAT} applied. The pull up voltage may be up to 5.5V regardless of the voltage on V_{CC}. If not used, this pin may be left unconnected.
8	3	V_{CC}	Primary Power Supply. When voltage is applied within normal limits, the device is fully accessible and data can be written and read. When a backup supply is connected to the device and V_{CC} is below V_{PF}, reads and writes are inhibited. The backup supply maintains the timekeeping function while V_{CC} is absent.
—	4–13	N.C.	No Connection. These pins are not connected internally, but must be grounded for proper operation.

DETAILED DESCRIPTION

The DS1338 serial RTC is a low-power, full BCD clock/calendar plus 56 bytes of NV SRAM. Address and data are transferred serially through an I^2C interface. The clock/calendar provides seconds, minutes, hours, day, date, month, and year information. The end of the month date is automatically adjusted for months with fewer than 31 days, including corrections for leap year. The clock operates in either the 24-hour or 12-hour format with AM/PM indicator. The DS1338 has a built-in power-sense circuit that detects power failures and automatically switches to the V_{BAT} supply.

OPERATION

The DS1338 operates as a slave device on the serial bus. Access is obtained by implementing a START condition and providing a device identification code, followed by data. Subsequent registers can be accessed sequentially until a STOP condition is executed. The device is fully accessible and data can be written and read when V_{CC} is greater than V_{PF}. However, when V_{CC} falls below V_{PF}, the internal clock registers are blocked from any access. If V_{PF} is less than V_{BAT}, the device power is switched from V_{CC} to V_{BAT} when V_{CC} drops below V_{PF}. If V_{PF} is greater than V_{BAT}, the device power is switched from V_{CC} to V_{BAT} when V_{CC} drops below V_{BAT}. The oscillator and timekeeping functions are maintained from the V_{BAT} source until V_{CC} is returned to nominal levels. The block diagram (Figure 3) shows the main elements of the DS1338.

An enable bit in the seconds register controls the oscillator. Oscillator startup times are highly dependent upon crystal characteristics, PC board leakage, and layout. High ESR and excessive capacitive loads are the major contributors to long start-up times. A circuit using a crystal with the recommended characteristics and proper layout usually starts within 1 second.

POWER CONTROL

The power-control function is provided by a precise, temperature-compensated voltage reference and a comparator circuit that monitors the V_{CC} level. The device is fully accessible and data can be written and read when V_{CC} is greater than V_{PF}. However, when V_{CC} falls below V_{PF}, the internal clock registers are blocked from any access. If V_{PF} is less than V_{BAT}, the device power is switched from V_{CC} to V_{BAT} when V_{CC} drops below V_{PF}. If V_{PF} is greater than V_{BAT}, the device power is switched from V_{CC} to V_{BAT} when V_{CC} drops below V_{BAT}. The registers are maintained from the V_{BAT} source until V_{CC} is returned to nominal levels (Table 1). After V_{CC} returns above V_{PF}, read and write access is allowed after t_{REC} (Figure 1). On the first application of power to the device the time and date registers are reset to 01/01/00 01 00:00:00 (DD/MM/YY DOW HH:MM:SS). The CH bit in the seconds register will be set to a 0.

Table 1. Power Control

SUPPLY CONDITION	READ/WRITE ACCESS	POWERED BY
$V_{CC} < V_{PF}$, $V_{CC} < V_{BAT}$	No	V_{BAT}
$V_{CC} < V_{PF}$, $V_{CC} > V_{BAT}$	No	V_{CC}
$V_{CC} > V_{PF}$, $V_{CC} < V_{BAT}$	Yes	V_{CC}
$V_{CC} > V_{PF}$, $V_{CC} > V_{BAT}$	Yes	V_{CC}

OSCILLATOR CIRCUIT

The DS1338 uses an external 32.768kHz crystal. The oscillator circuit does not require any external resistors or capacitors to operate. Table 2 specifies several crystal parameters for the external crystal. Figure 3 shows a functional schematic of the oscillator circuit. The startup time is usually less than 1 second when using a crystal with the specified characteristics.

Table 2. Crystal Specifications*

PARAMETER	SYMBOL	MIN	TYP	MAX	UNITS
Nominal Frequency	f_O		32.768		kHz
Series Resistance	ESR			50	kΩ
Load Capacitance	C_L		12.5		pF

**The crystal, traces, and crystal input pins should be isolated from RF generating signals. Refer to* Application Note 58: Crystal Considerations for Dallas Real-Time Clocks *for additional specifications.*

CLOCK ACCURACY

The accuracy of the clock is dependent upon the accuracy of the crystal and the accuracy of the match between the capacitive load of the oscillator circuit and the capacitive load for which the crystal was trimmed. Crystal frequency drift caused by temperature shifts creates additional error. External circuit noise coupled into the oscillator circuit can result in the clock running fast. Figure 4 shows a typical PC board layout for isolating the crystal and oscillator from noise. Refer to *Application Note 58: Crystal Considerations with Dallas Real-Time Clocks* for detailed information.

DS1338C ONLY

The DS1338C integrates a standard 32,768Hz crystal in the package. Typical accuracy at nominal V_{CC} and +25°C is approximately 10ppm. Refer to *Application Note 58* for information about crystal accuracy vs. temperature.

Figure 4. Typical PC Board Layout for Crystal

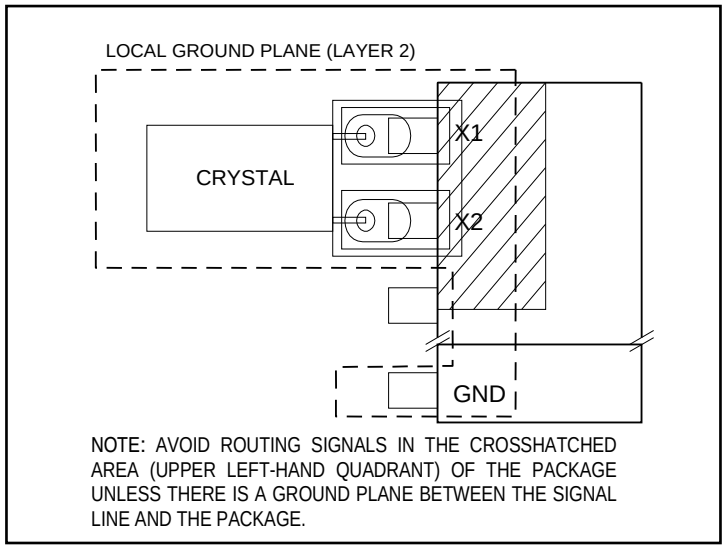

RTC AND RAM ADDRESS MAP

Table 3 shows the address map for the RTC and RAM registers. The RTC registers and control register are located in address locations 00h to 07h. The RAM registers are located in address locations 08h to 3Fh. During a multibyte access, when the register pointer reaches 3Fh (the end of RAM space) it wraps around to location 00h (the beginning of the clock space). On an I^2C START, STOP, or register pointer incrementing to location 00h, the current time and date is transferred to a second set of registers. The time and date in the secondary registers are read in a multibyte data transfer, while the clock continues to run. This eliminates the need to re-read the registers in case of an update of the main registers during a read.

CLOCK AND CALENDAR

The time and calendar information is obtained by reading the appropriate register bytes. See Figure 6 for the RTC registers. The time and calendar are set or initialized by writing the appropriate register bytes. The contents of the time and calendar registers are in the BCD format. Bit 7 of Register 0 is the clock halt (CH) bit. When this bit is set to 1, the oscillator is disabled. When cleared to 0, the oscillator is enabled. The clock can be halted whenever the timekeeping functions are not required, which minimizes V_{BAT} current (I_{BATDAT}) when VCC is not applied.

The day-of-week register increments at midnight. Values that correspond to the day of week are user-defined but must be sequential (i.e., if 1 equals Sunday, then 2 equals Monday, and so on). Illogical time and date entries result in undefined operation.

When reading or writing the time and date registers, secondary (user) buffers are used to prevent errors when the internal registers update. When reading the time and date registers, the user buffers are synchronized to the internal registers on any start or stop and when the register pointer rolls over to zero. The countdown chain is reset whenever the seconds register is written. Write transfers occur on the acknowledge from the DS1338. Once the

countdown chain is reset, to avoid rollover issues the remaining time and date registers must be written within 1 second. The 1Hz square-wave output, if enabled, transitions high 500ms after the seconds data transfer, provided the oscillator is already running.

The DS1338 runs in either 12-hour or 24-hour mode. Bit 6 of the hours register is defined as the 12-hour or 24-hour mode-select bit. When high, the 12-hour mode is selected. In the 12-hour mode, bit 5 is the $\overline{AM}$/PM bit, with logic high being PM. In the 24-hour mode, bit 5 is the 20-hour bit (20–23 hours). If the 12/$\overline{24}$-hour mode select is changed, the hours register must be re-initialized to the new format.

On an I^2C START, the current time is transferred to a second set of registers. The time information is read from these secondary registers, while the clock continues to run. This eliminates the need to re-read the registers in case of an update of the main registers during a read.

Table 3. RTC and RAM Address Map

ADDRESS	BIT 7	BIT 6	BIT 5	BIT 4	BIT 3	BIT 2	BIT 1	BIT 0	FUNCTION	RANGE
00H	CH	10 Seconds			Seconds				Seconds	00–59
01H	0	10 Minutes			Minutes				Minutes	00–59
02H	0	12/$\overline{24}$	$\overline{AM}$/PM 20 Hour	10 Hour	Hour				Hours	1–12 +AM/PM 00–23
03H	0	0	0	0	0	Day			Day	1–7
04H	0	0	10 Date		Date				Date	01–31
05H	0	0	0	10 Month	Month				Month	01–12
06H	10 Year				Year				Year	00–99
07H	OUT	0	OSF	SQWE	0	0	RS1	RS0	Control	
08H–3FH									RAM 56 x 8	00H–FFH

Note: *Bits listed as "0" always read as a 0.*

CONTROL REGISTER (07H)

The control register controls the operation of the SQW/OUT pin and provides oscillator status.

Bit #	BIT 7	BIT 6	BIT 5	BIT 4	BIT 3	BIT 2	BIT 1	BIT 0
Name	OUT	0	OSF	SQWE	0	0	RS1	RS0
POR	1	0	1	1	0	0	1	1

Bit 7: Output Control (OUT). Controls the output level of the SQW/OUT pin when the square-wave output is disabled. If SQWE = 0, the logic level on the SQW/OUT pin is 1 if OUT = 1; it is 0 if OUT = 0.

Bit 5: Oscillator Stop Flag (OSF). A logic 1 in this bit indicates that the oscillator has stopped or was stopped for some time period and can be used to judge the validity of the clock and calendar data. This bit is edge triggered, and is set to logic 1 when the internal circuitry senses the oscillator has transitioned from a normal run state to a STOP condition. The following are examples of conditions that may cause the OSF bit to be set:

1) The first time power is applied.
2) The voltage present on V_{CC} and V_{BAT} are insufficient to support oscillation.
3) The CH bit is set to 1, disabling the oscillator.
4) External influences on the crystal (i.e., noise, leakage, etc.).

This bit remains at logic 1 until written to logic 0. This bit can only be written to logic 0. Attempting to write OSF to logic 1 leaves the value unchanged.

Bit 4: Square-Wave Enable (SQWE). When set to logic 1, this bit enables the oscillator output to operate with either V_{CC} or V_{BAT} applied. The frequency of the square-wave output depends upon the value of the RS0 and RS1 bits.

Bits 1 and 0: Rate Select (RS1 and RS0). These bits control the frequency of the square-wave output when the square-wave output has been enabled. The table below lists the square-wave frequencies that can be selected with the RS bits.

Square-Wave Output

OUT	RS1	RS0	SQW OUTPUT	SQWE
X	0	0	1Hz	1
X	0	1	4.096kHz	1
X	1	0	8.192kHz	1
X	1	1	32.768kHz	1
0	X	X	0	0
1	X	X	1	0

I²C SERIAL DATA BUS

The DS1338 supports the I²C protocol. A device that sends data onto the bus is defined as a transmitter and a device receiving data is a receiver. The device that controls the message is called a master. The devices that are controlled by the master are referred to as slaves. The bus must be controlled by a master device, which generates the serial clock (SCL), controls the bus access, and generates the START and STOP conditions. The DS1338 operates as a slave on the I²C bus. Within the bus specifications, a standard mode (100kHz maximum clock rate) and a fast mode (400kHz maximum clock rate) are defined. The DS1338 works in both modes. Connections to the bus are made through the open-drain I/O lines SDA and SCL.

The following bus protocol has been defined (Figure 5).

- Data transfer can be initiated only when the bus is not busy.
- During data transfer, the data line must remain stable whenever the clock line is HIGH. Changes in the data line while the clock line is HIGH are interpreted as control signals.

Accordingly, the following bus conditions have been defined:

Bus not busy: Both data and clock lines remain HIGH.

Start data transfer: A change in the state of the data line, from HIGH to LOW, while the clock is HIGH, defines a START condition.

Stop data transfer: A change in the state of the data line, from LOW to HIGH, while the clock line is HIGH, defines the STOP condition.

Data valid: The state of the data line represents valid data when, after a START condition, the data line is stable for the duration of the HIGH period of the clock signal. The data on the line must be changed during the LOW period of the clock signal. There is one clock pulse per bit of data.

Each data transfer is initiated with a START condition and terminated with a STOP condition. The number of data bytes transferred between START and STOP conditions is not limited and is determined by the master device. The information is transferred byte-wise and each receiver acknowledges with a ninth bit.

Acknowledge: Each receiving device, when addressed, is obliged to generate an acknowledge after the reception of each byte. The master device must generate an extra clock pulse that is associated with this acknowledge bit.

A device that acknowledges must pull down the SDA line during the acknowledge clock pulse in such a way that the SDA line is stable LOW during the HIGH period of the acknowledge-related clock pulse. Of course, setup and hold times must be taken into account. A master must signal an end of data to the slave by not generating an acknowledge bit on the last byte that has been clocked out of the slave. In this case, the slave must leave the data line HIGH to enable the master to generate the STOP condition.

Figure 5. Data Transfer on I²C Serial Bus

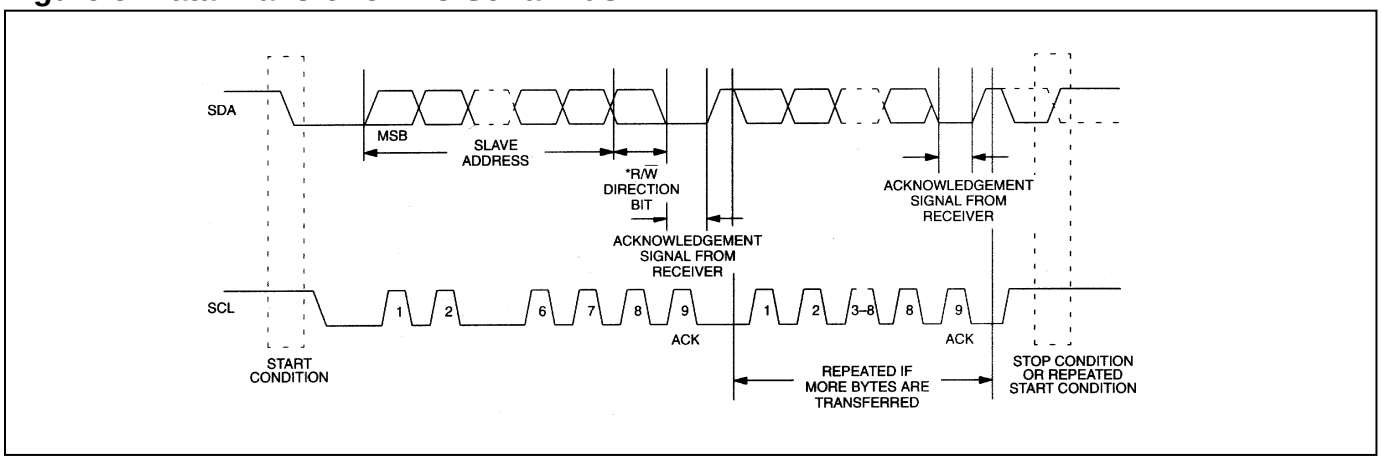

Depending upon the state of the R/$\overline{W}$ bit, two types of data transfer are possible:

1) **Data transfer from a master transmitter to a slave receiver.** The master transmits the first byte (the slave address). Next follows a number of data bytes. The slave returns an acknowledge bit after each received byte. Data is transferred with the most significant bit (MSB) first.

2) **Data transfer from a slave transmitter to a master receiver.** The master transmits the first byte (the slave address). The slave then returns an acknowledge bit, which is followed by the slave transmitting a number of data bytes. The master returns an acknowledge bit after all received bytes other than the last byte. At the end of the last received byte, a “not acknowledge” is returned. The master device generates all of the serial clock pulses and the START and STOP conditions. A transfer is ended with a STOP condition or with a repeated START condition. Since a repeated START condition is also the beginning of the next serial transfer, the bus is not released. Data is transferred with the most significant bit (MSB) first.

The DS1338 can operate in the following two modes:

1) **Slave receiver mode (write mode):** Serial data and clock are received through SDA and SCL. An acknowledge bit is transmitted after each byte is received. START and STOP conditions are recognized as the beginning and end of a serial transfer. Hardware performs address recognition after reception of the slave address and direction bit (Figure 6). The slave address byte is the first byte received after the master generates the START condition. The slave address byte contains the 7-bit DS1338 address—1101000—followed by the direction bit (R/$\overline{W}$), which, for a write, is 0. After receiving and decoding the slave address byte, the slave outputs an acknowledge on the SDA line. After the DS1338 acknowledges the slave address and write bit, the master transmits a register address to the DS1338. This sets the register pointer on the DS1338, with DS1338 acknowledging the transfer. The master may then transmit zero or more bytes of data, with the DS1338 acknowledging each byte received. The register pointer increments after each data byte is transferred. The master generates a STOP condition to terminate the data write.

2) **Slave transmitter mode (read mode):** The first byte is received and handled as in the slave receiver mode. However, in this mode, the direction bit indicates that the transfer direction is reversed. The DS1338 transmits serial data on SDA while the serial clock is input on SCL. START and STOP conditions are recognized as the beginning and end of a serial transfer (Figure 7). The slave address byte is the first byte received after the master generates the START condition. The slave address byte contains the 7-bit DS1338 address—1101000—followed by the direction bit (R/$\overline{W}$), which, for a read, is 1. After receiving and decoding the slave address byte, the slave outputs an acknowledge on the SDA line. The DS1338 then starts transmitting data using the register address pointed to by the register pointer. If the register pointer is not set before the initiation of a read mode, the first address that is read is the last one stored in the register pointer. The register pointer is incremented after each byte is transferred. The DS1338 must receive a “not acknowledge” to end a read.

Figure 6. Data Write—Slave Receiver Mode

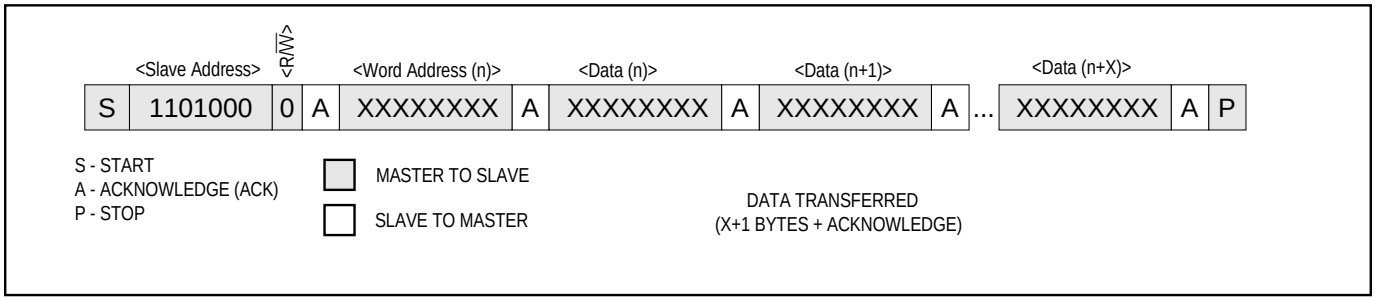

Figure 7. Data Read (From Current Pointer Location)—Slave Transmitter Mode

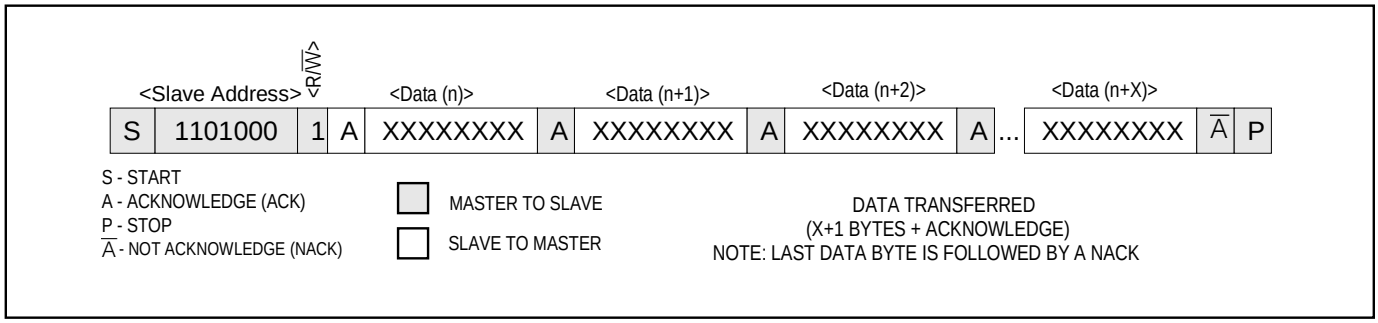

Figure 8. Data Read (Write Pointer, Then Read—Slave Receive and Transmit

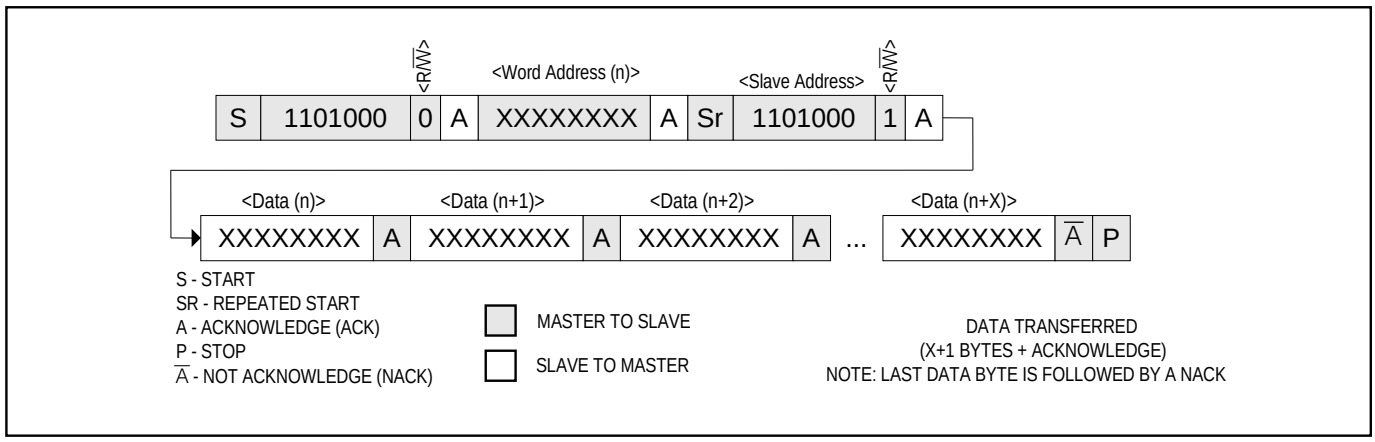

HANDLING, PCB LAYOUT, AND ASSEMBLY

The DS1338C package contains a quartz tuning-fork crystal. Pick-and-place equipment may be used, but precautions should be taken to ensure that excessive shocks are avoided. Ultrasonic cleaning should be avoided to prevent damage to the crystal. Exposure to reflow is limited to 2 times maximum.

Avoid running signal traces under the package, unless a ground plane is placed between the package and the signal line. All N.C. (no connect) pins must be connected to ground.

The RoHS and lead-free/RoHS packages may be reflowed using a reflow profile that complies with JEDEC J-STD-020.

Moisture-sensitive packages are shipped from the factory dry-packed. Handling instructions listed on the package label must be followed to prevent damage during reflow. Refer to the IPC/JEDEC J-STD-020 standard for moisture-sensitive device (MSD) classifications.

PIN CONFIGURATIONS

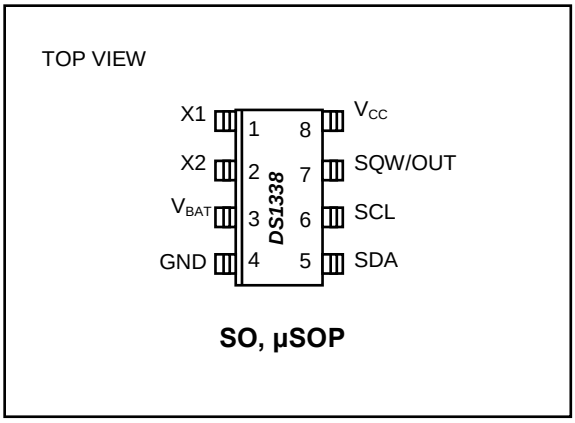

SO, µSOP

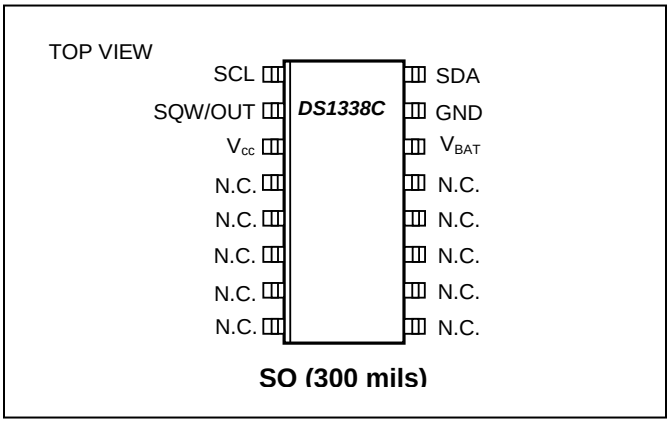

SO (300 mils)

CHIP INFORMATION

TRANSISTOR COUNT: 12,231
PROCESS: CMOS

THERMAL INFORMATION

PART	THETA-J_A (°C/W)	THETA-J_C (°C/W)
8 SO	132	38
8 µSOP	206.3	42
16 SO	73	23

PACKAGE INFORMATION

For the latest package outline information and land patterns (footprints), go to **www.maxim-ic.com/packages**. Note that a "+", "#", or "-" in the package code indicates RoHS status only. Package drawings may show a different suffix character, but the drawing pertains to the package regardless of RoHS status.

PACKAGE TYPE	PACKAGE CODE	OUTLINE NO.	LAND PATTERN NO.
8 SO	S8+4	21-0041	90-0096
8 µMAX	U8+1	21-0036	90-0092
16 SO	W16#H2	21-0042	90-0107

REVISION HISTORY

REVISION DATE	DESCRIPTION	PAGES CHANGED
100108	Modified the *Features* bullet to indicate that battery-backed RAM has unlimited writes.	1
	Removed leaded part numbers from the *Ordering Information* table.	1
	Removed the pullup resistor voltage spec from the *Recommended DC Operating Conditions* table and added it to the pin descriptions.	2, 7
	Updated the block diagram (Figure 3) to show that SQW is open drain.	5
	Added the initial POR state for time and date registers in the *Power Control* section.	8
	Added text to explain the use of the oscillator bit to control battery current in the *Clock and Calendar* section.	9
9/11	Updated the *Absolute Maximum Ratings*, *Recommended DC Operating Conditions*, *DC Electrical Characteristics*, *Power Control*, *Oscillator Circuit*, Table 3, *Handling, PBB Layout, and Assembly*, *Thermal Information*, and *Package Information.*	2, 8, 10, 15
3/12	Corrected the CH bit POR condition from 1 to 0 in the *Power Control* section	8
4/15	Revised *Benefits and Features* section	1

Maxim cannot assume responsibility for use of any circuitry other than circuitry entirely embodied in a Maxim product. No circuit patent licenses are implied. Maxim reserves the right to change the circuitry and specifications without notice at any time.

Maxim Integrated Products, 160 Rio Robles, San Jose, CA 95134 408-601-1000

© 2015 Maxim Integrated Products Maxim is a registered trademark of Maxim Integrated Products, Inc.