19-4861; 8/09

DS1404
Touch and Hold Probe Cable Cradle

www.maxim-ic.com

FEATURES

- Precision molded black plastic holder that mounts using double-sided adhesive tape
- Holds the touch-and-hold probe end of the DS1402RP or DS1402BP
- Probe can be inserted loosely for temporary holding or firmly for probing
- Allows a palmtop or handheld computer to be used as handy iButton ™ reader/writer

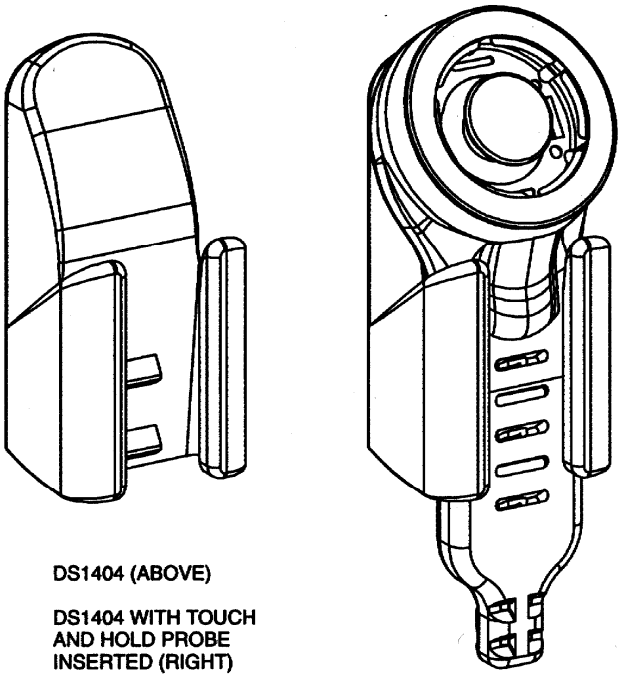

DS1404 (ABOVE)

DS1404 WITH TOUCH AND HOLD PROBE INSERTED (RIGHT)

(BOTH PICTURES ARE APPROXIMATELY ACTUAL SIZE)

ORDERING INFORMATION

DS1404+ includes adhesive tape

+Denotes a lead(Pb)-free/RoHS-compliant product.

DESCRIPTION

With handheld equipment functioning as an iButton reader/writer one often faces the problem of finding a place for the probe when it is not used. The DS1404 Touch and Hold Probe Cable Cradle solves this problem. In addition to that, it converts the handheld equipment into a compact single-unit reader/writer for iButtons if the probe is firmly inserted into the cradle.

The DS1404 comes with double-sided adhesive tape. For best results, clean and dry the surface of the object where the DS1404 is to be mounted.

REVISION HISTORY

REVISION DATE	DESCRIPTION	PAGES CHANGED
8/09	Added a plus sign (+) to the *Ordering Information* to reflect a lead-free conversion.	1