DS1707/DS1708
3.3 and 5.0-Volt MicroMonitor

www.maxim-ic.com

FEATURES
- Holds microprocessor in check during power transients
- Automatically restarts microprocessor after power failure
- Monitors pushbutton for external override
- Accurate 5%, 10% or 20% resets for 3.3V systems and 5% or 10% resets for 5.0V systems
- Eliminates the need for discrete components
- 20% tolerance compatible with 3.0V systems
- Pin compatible with the MAXIM MAX707/MAX708 in 8-pin DIP, 8-pin SOIC packages
- 8-pin DIP, 8-pin and µ-SOP SOIC and 8-pin µ-SOP packages available
- Industrial temperature range -40°C to +85°C

PIN ASSIGNMENT

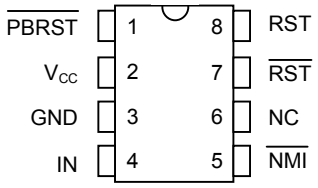

8-Pin DIP (300-mil)

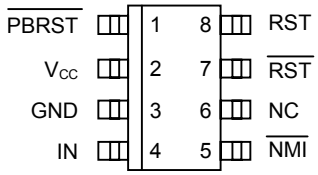

8-Pin SOIC (150-mil)

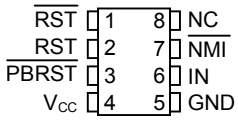

8-Pin µ-SOP (118-mil)

See Mech. Drawings Section on website

DS1707 and DS1708_R/S/T

PIN DESCRIPTION

$\overline{\text{PBRST}}$	- Pushbutton Reset Input
V_{CC}	- Power Supply
GND	- Ground
IN	- Input
$\overline{\text{NMI}}$	- Non-maskable Interrupt
NC	- No Connect
$\overline{\text{RST}}$	- Active Low Reset Output
RST	- Active High Reset Output

DESCRIPTION
The DS1707/DS1708 3.3- or 5.0-Volt MicroMonitor monitors three vital conditions for a microprocessor: power supply, voltage sense, and external override. A precision temperature-compensated reference and comparator circuit monitor the status of V_{CC} at the device and at an upstream point for maximum protection. When the sense input detects an out-of-tolerance condition a non-maskable interrupt is generated. As the voltage at the device degrades an internal power fail signal is generated which forces the reset to an active state. When V_{CC} returns to an in-tolerance condition, the reset signal is kept in the active state for a minimum of 130 ms to allow the power supply and processor to stabilize.

The third function the DS1707/DS1708 performs is pushbutton reset control. The DS1707/DS1708 debounces the pushbutton input and guarantees an active reset pulse width of 130 ms minimum.

OPERATION

Power Monitor

The DS1707/DS1708 detects out-of-tolerance power supply conditions and warns a processor-based system of impending power failure. When V_{CC} falls below the minimum V_{CC} tolerance, a comparator outputs the RST and $\overline{RST}$ signals. RST and $\overline{RST}$ are excellent control signals for a microprocessor, as processing is stopped at the last possible moment of valid V_{CC}. On power-up, RST and $\overline{RST}$ are kept active for a minimum of 130 ms to allow the power supply and processor to stabilize.

Pushbutton Reset

The DS1707/DS1708 provides an input pin for direct connection to a pushbutton reset (see Figure 2). The pushbutton reset input requires an active low signal. Internally, this input is debounced and timed such that RST and $\overline{RST}$ signals of at least 130 ms minimum will be generated. The 130 ms delay commences as the pushbutton reset input is released from the low level. The pushbutton can be initiated by connecting the $\overline{NMI}$ output to the $\overline{PBRST}$ input as shown in Figure 3.

Non-Maskable Interrupt

The DS1707/DS1708 generates a non-maskable interrupt ($\overline{NMI}$) for early warning of a power failure. A precision comparator monitors the voltage level at the IN pin relative to an on-chip reference generated by an internal band gap. The IN pin is a high impedance input allowing for a user-defined sense point. An external resistor voltage divider network (Figure 5) is used to interface with high voltage signals. This sense point may be derived from a regulated supply or from a higher DC voltage level closer to the main system power input. Since the IN trip point V_{TP} is 1.25 volts, the proper values for R1 and R2 can be determined by the equation as shown in Figure 5. Proper operation of the DS1707/DS1708 requires that the voltage at the IN pin be limited to V_{CC}. Therefore, the maximum allowable voltage at the supply being monitored (V_{MAX}) can also be derived as shown in Figure 5. A simple approach to solving the equation is to select a value for R2 high enough to keep power consumption low, and solve for R1. The flexibility of the IN input pin allows for detection of power loss at the earliest point in a power supply system, maximizing the amount of time for system shut-down between $\overline{NMI}$ and RST/$\overline{RST}$.

When the supply being monitored decays to the voltage sense point, the DS1707/DS1708 pulses the $\overline{NMI}$ output to the active state for a minimum 200 µs. The $\overline{NMI}$ power-fail detection circuitry also has built-in hysteresis of 100 µV. The supply must be below the voltage sense point for approximately 5 µs before a low $\overline{NMI}$ will be generated. In this way, power supply noise is removed from the monitoring function, preventing false interrupts. During a power-up, any detected IN pin levels below V_{TP} by the comparator are disabled from generating an interrupt until V_{CC} rises to V_{CCTP}. As a result, any potential $\overline{NMI}$ pulse will not be initiated until V_{CC} reaches V_{CCTP}.

Connecting $\overline{NMI}$ to $\overline{PBRST}$ would allow the non-maskable interrupt to generate an automatic reset when an out-of-tolerance condition occurred in a monitored supply. An example is shown in Figure 3.

MICROMONITOR BLOCK DIAGRAM Figure 1

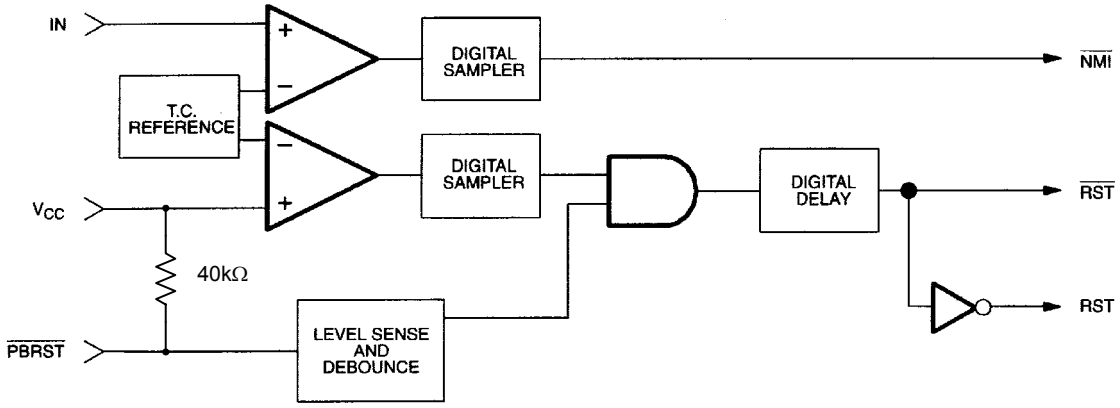

PUSHBUTTON RESET Figure 2

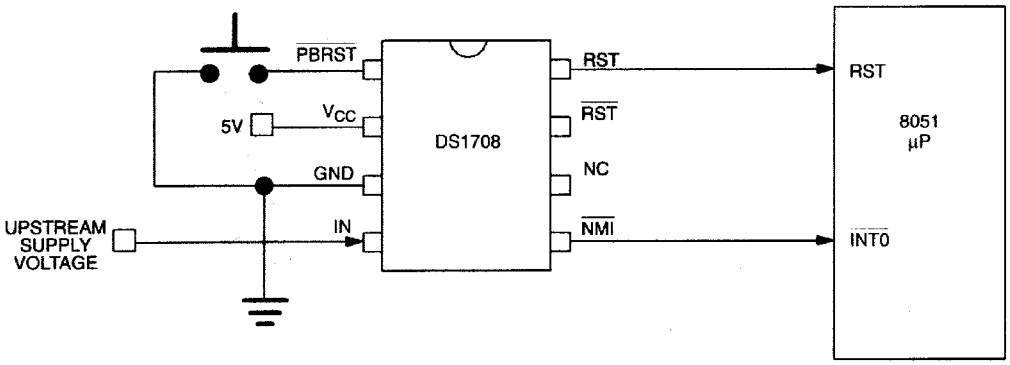

PUSHBUTTON RESET CONTROLLED BY $\overline{\text{NMI}}$ Figure 3

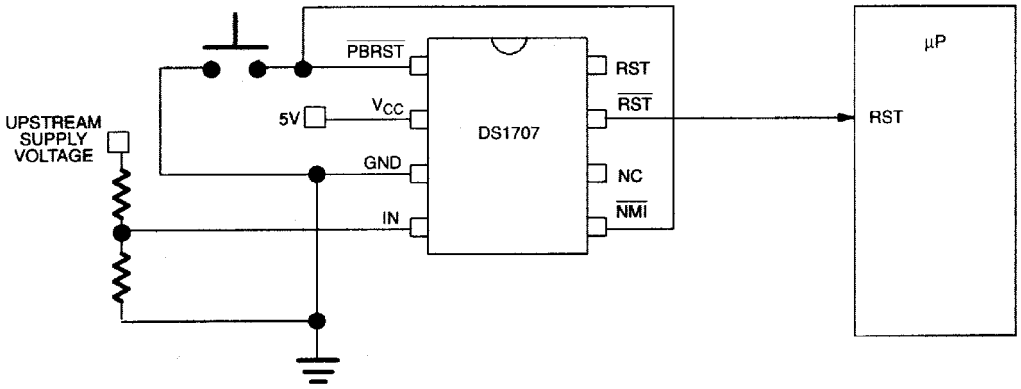

TIMING DIAGRAM: PUSHBUTTON RESET Figure 4

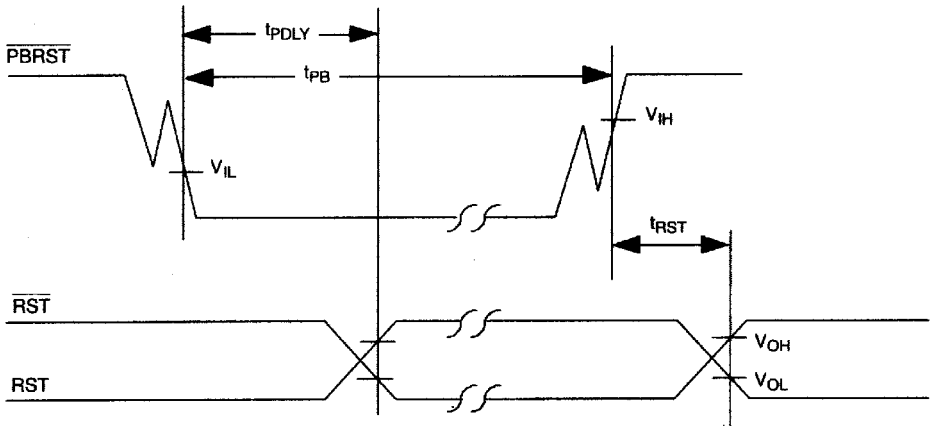

NON-MASKABLE INTERRUPT CIRCUIT EXAMPLE Figure 5

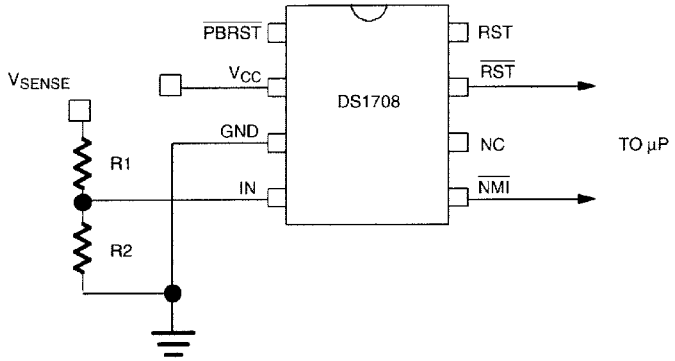

$$V_{SENSE} = \frac{R1+R2}{R2} \text{ X } 1.25 \qquad V_{MAX} = \frac{V_{SENSE}}{V_{TP}} \text{ X } V_{CC}$$

Example: V_{SENSE} = 4.50V at the trip point
V_{CC} = 3.3V
10 kΩ = R2

Therefore: $\frac{4.50}{1.25}$ X 3.3 = 11.88V maximum

$$4.50 = \frac{R1+10k}{10k} \text{ X } 1.25 \qquad R1 = 26 \text{ k}\Omega$$

TIMING DIAGRAM: NON-MASKABLE INTERRUPT Figure 6

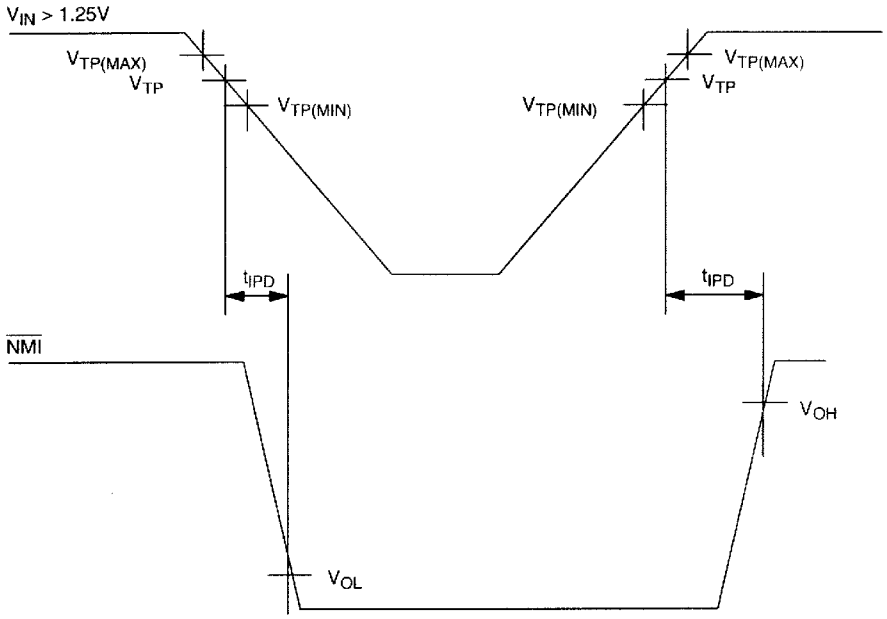

TIMING DIAGRAM: POWER-DOWN Figure 7

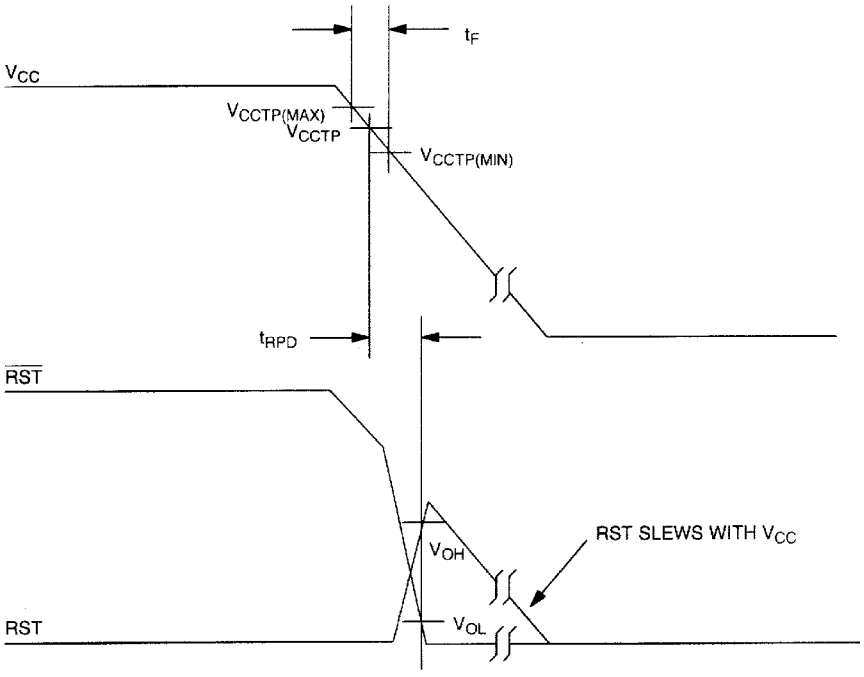

TIMING DIAGRAM: POWER UP Figure 8

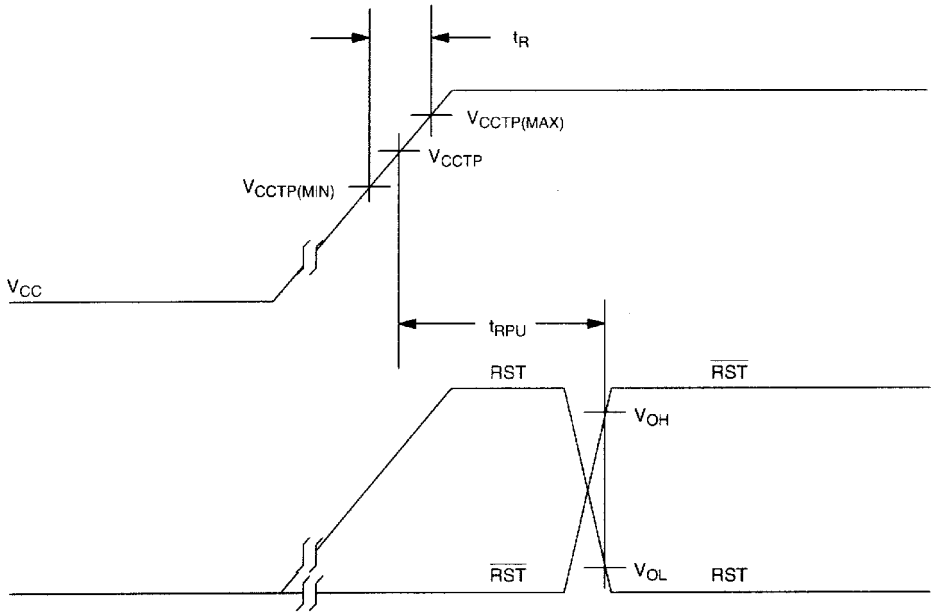

ABSOLUTE MAXIMUM RATINGS*

Voltage on V_{CC} Pin Relative to Ground	-0.5V to +7.0V
Voltage on I/O Relative to Ground**	-0.5V to V_{CC} + 0.5V
Operating Temperature	-40°C to +85°C
Storage Temperature	-55°C to +125°C
Soldering Temperature	260°C for 10 seconds

* This is a stress rating only and functional operation of the device at these or any other conditions above those indicated in the operation sections of this specification is not implied. Exposure to absolute maximum rating conditions for extended periods of time may affect reliability.

** The voltage input limits on IN and $\overline{\text{PBRST}}$ can be exceeded if the input current is less than 10 mA.

RECOMMENDED DC OPERATING CONDITIONS (-40°C to +85°C)

PARAMETER	SYMBOL	MIN	TYP	MAX	UNITS	NOTES
Supply Voltage	V_{CC}	1.2		5.5	V	1
$\overline{\text{PBRST}}$ Input High Level	V_{IH}	2.0 V_{CC}-0.5		V_{CC}+0.3	V	1, 3 1, 4
$\overline{\text{PBRST}}$ Input Low Level	V_{IL}	-0.03		+0.5	V	1

DC ELECTRICAL CHARACTERISTICS (-40°C to +85°C; V_{CC}=1.2V to 5.5V)

PARAMETER	SYMBOL	MIN	TYP	MAX	UNITS	NOTES
V_{CC} Trip Point DS1707	V_{CCTP}	4.50	4.65	4.75	V	1
V_{CC} Trip Point DS1708	V_{CCTP}	4.25	4.40	4.50	V	1
V_{CC} Trip Point DS1708T	V_{CCTP}	3.00	3.08	3.15	V	1
V_{CC} Trip Point DS1708S	V_{CCTP}	2.85	2.93	3.00	V	1
V_{CC} Trip Point DS1708R	V_{CCTP}	2.55	2.63	2.70	V	1
Input Leakage	I_{IL}	-1.0		+1.0	µA	2
Output Current @ 2.4V	I_{OH}		350		µA	3
Output Current @ 0.4V	I_{OL}	10			mA	3
Output Voltage @ -500µA	V_{OH}	V_{CC}-0.3	V_{CC}-0.1		V	3
Operating Current @ V_{CC} < 5.5V	I_{CC}			60	µA	5
Operating Current @ V_{CC} < 3.6V	I_{CC}			50	µA	5
IN Input Trip Point	V_{TP}	1.20	1.25	1.30	V	1

CAPACITANCE (t_A=25°C)

PARAMETER	SYMBOL	MIN	TYP	MAX	UNITS	NOTES
Input Capacitance	C_{IN}			5	pF	
Output Capacitance	C_{OUT}			7	pF	

AC ELECTRICAL CHARACTERISTICS (-40°C to +85°C; V_{CC}=1.2V to 5.5V)

PARAMETER	SYMBOL	MIN	TYP	MAX	UNITS	NOTES
$\overline{PBRST}$ = V_{IL}	t_{PB}	150			ns	
Reset Active Time	t_{RST}	130	205	285	ms	
V_{CC} Detect to RST and $\overline{RST}$	t_{RPD}		5	8	µs	7
V_{CC} Slew Rate	t_F	20			µs	
V_{CC} Detect to RST and $\overline{RST}$	t_{RPU}	130	205	285	ms	6
V_{CC} Slew Rate	t_R	0			ns	
$\overline{PBRST}$ Stable Low to RST and $\overline{RST}$	t_{PDLY}			250	ns	
VIN Detect to $\overline{NMI}$	t_{IPD}		5	8	µs	7

NOTES:

1. All voltages are referenced to ground.
2. $\overline{PBRST}$ is internally pulled up to V_{CC} with an internal impedance of 40 kΩ typical.
3. $V_{CC} \geq 2.4V$
4. $V_{CC} < 2.4V$
5. Measured with outputs open and all inputs at V_{CC} or ground.
6. t_R = 5 µs
7. Noise immunity - pulses < 2 µs at V_{CCTP} minimum will not cause a reset.

PART MARKING CODES

8-pin DIP
(300 MIL)

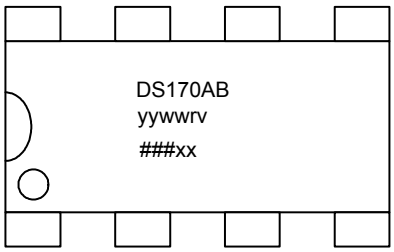

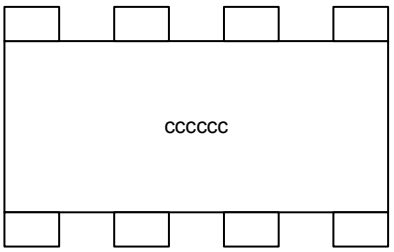

8-pin SOIC
(150 MIL)

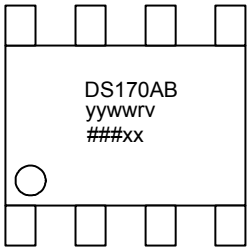

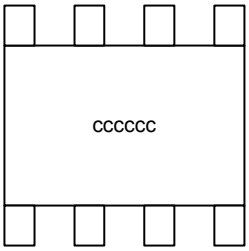

8-pin µSOP
(118 MIL)

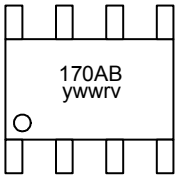

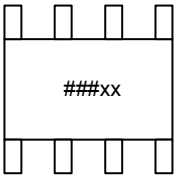

Brand Codes		
Code	**Description**	**Values**
AB	Device type and tolerance	7_, 8_, 8R, 8S, 8T (where'_' is a blank)
yww or yyww	Date Code. Identifies the year and work week the device was assembled.	y, the last digit of the year. yy, the last two digits of the year. ww, the work week (values 01 through 52).
rv	Die Revision	A letter followed by a number (eg. B1)
###xx	Lot Code	Three numbers followed by 2 letters
ccccccc	Country of Assembly	Abbreviation of country name.

ORDERING INFORMATION

ORDERING NUMBER	PACKAGE	OPERATING TEMPERATURE	VERSION
DS1707EPA	8-pin DIP (300mil)	-40°C TO +85°C	5V-5% MONITOR, /RST, RST
DS1707ESA	8-pin SOIC (150 mil)	-40°C TO +85°C	5V-5% MONITOR, /RST, RST
DS1707EUA	8-pin µSOP (118 mil)	-40°C TO +85°C	5V-5% MONITOR, /RST, RST
DS1708EPA	8-pin DIP (300mil)	-40°C TO +85°C	5V-10% MONITOR, /RST, RST
DS1708ESA	8-pin SOIC (150 mil)	-40°C TO +85°C	5V-10% MONITOR, /RST, RST
DS1708EUA	8-pin µSOP (118 mil)	-40°C TO +85°C	5V-10% MONITOR, /RST, RST
DS1708REPA	8-pin DIP (300mil)	-40°C TO +85°C	3.3V-20% MONITOR, /RST, RST
DS1708RESA	8-pin SOIC (150 mil)	-40°C TO +85°C	3.3V-20% MONITOR, /RST, RST
DS1708REUA	8-pin µSOP (118 mil)	-40°C TO +85°C	3.3V-20% MONITOR, /RST, RST
DS1708SEPA	8-pin DIP (300mil)	-40°C TO +85°C	3.3V-10% MONITOR, /RST, RST
DS1708SESA	8-pin SOIC (150 mil)	-40°C TO +85°C	3.3V-10% MONITOR, /RST, RST
DS1708SEUA	8-pin µSOP (118 mil)	-40°C TO +85°C	3.3V-10% MONITOR, /RST, RST
DS1708TEPA	8-pin DIP (300mil)	-40°C TO +85°C	3.3V-5% MONITOR, /RST, RST
DS1708TESA	8-pin SOIC (150 mil)	-40°C TO +85°C	3.3V-5% MONITOR, /RST, RST
DS1708TEUA	8-pin µSOP (118 mil)	-40°C TO +85°C	3.3V-5% MONITOR, /RST, RST

*Contact factory for availability of Pb-free versions.

E = -40°C to +85°C temperature range
A = 8 lead device
P = Plastic DIP (300 mil)
S = SOIC (150 mil)
U = µSOP (118 mil)