19-4734; Rev 7/09

DS1971
256-Bit EEPROM iButton

SPECIAL FEATURES

- 256-bit Electrically Erasable Programmable Read Only Memory (EEPROM) communicates with the economy of one signal plus ground
- EEPROM organized as one 256-bit page
- 64-bit one-time programmable application register is automatically write-protected after programming
- Reduces control, address, data, power, and programming signals to a single data pin
- 8-bit family code specifies DS1971 communications requirements to reader
- Reads and writes over a wide voltage range of 2.8V to 6.0V from -40°C to +85°C

F3 MicroCan

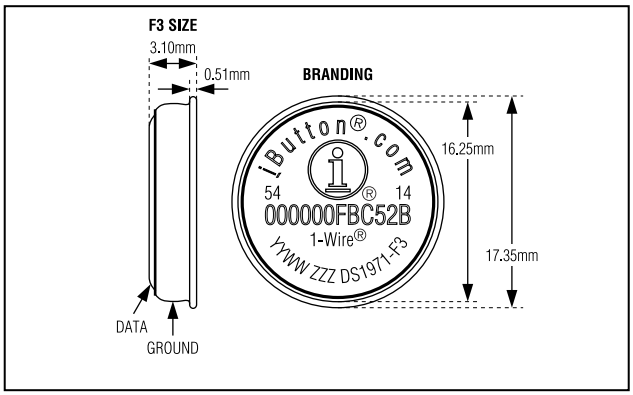

F5 MicroCan

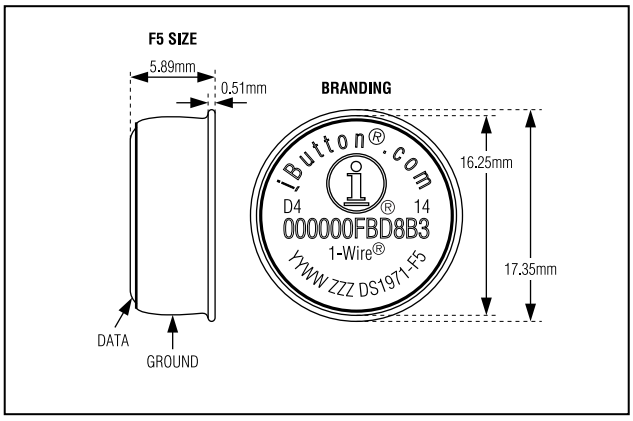

COMMON iButton FEATURES

- Unique, factory-lasered and tested 64-bit registration number (8-bit family code + 48-bit serial number + 8-bit CRC tester) assures absolute traceability because no two parts are alike
- Multidrop controller for MicroLAN
- Digital identification and information by momentary contact
- Chip-based data carrier compactly stores information
- Data can be accessed while affixed to object
- Economically communicates to bus master with a single digital signal at 16.3kbps
- Standard 16mm diameter and 1-Wire® protocol ensure compatibility with iButton family
- Button shape is self–aligning with cup-shaped probes
- Durable stainless steel case engraved with registration number withstands harsh environments
- Easily affixed with self-stick adhesive backing, latched by its flange, or locked with a ring pressed onto its rim
- Presence detector acknowledges when reader first applies voltage

ORDERING INFORMATION

DS1971-F3+	F3 MicroCan
DS1971-F5+	F5 MicroCan

+Denotes a lead(Pb)-free/RoHS-compliant package.

EXAMPLES OF ACCESSORIES

DS9096P	Self-Stick Adhesive Pad
DS9101	Multi-Purpose Clip
DS9093RA	Mounting Lock Ring
DS9093F	Snap-in Fob
DS9092	iButton Probe

iButton and 1-Wire are registered trademarks of Maxim Integrated Products, Inc.

iButton DESCRIPTION

The DS1971 256-bit EEPROM iButton is a rugged read/write data carrier that identifies and stores relevant information about the product or person to which it is attached. This information can be accessed with minimal hardware: for example, a single port pin of a microcontroller. The DS1971 consists of a factory-lasered registration number that includes a unique 48-bit serial number, an 8-bit CRC, and an 8-bit Family Code (14H) plus 256 bits of EEPROM. The power to program and read the DS1971 is derived entirely from the 1-Wire communication line. Data is transferred serially via the 1-Wire protocol which requires only a single data lead and a ground return. The 48-bit serial number that is factory-lasered into each DS1971 provides a guaranteed unique identity which allows for absolute traceability. The durable MicroCan package is highly resistant to harsh environments such as dirt, moisture, and shock. Its compact button-shaped profile is self-aligning with cup-shaped receptacles, allowing the DS1971 to be used easily by human operators or automatic equipment. Accessories permit the DS1971 to be mounted on printed circuit boards, plastic key fobs, photo-ID badges, ID bracelets, and many other objects. Applications include work-in-progress tracking, electronic travelers, access control and storage of calibration constants.

OVERVIEW

The block diagram in Figure 1 shows the relationships between the major control and memory sections of the DS1971. The DS1971 has four main data components: 1) 64-bit lasered ROM, 2) 256-bit EEPROM data memory with scratchpad, 3) 64-bit one-time programmable application register with scratchpad, and 4) 8-bit status memory. The bus master must first provide one of the ROM Function Commands before the memory functions become accessible. All data is read and written least significant bit first.

The DS1971 contains the same memory chip as the DS2430A. For a full description of the logical behavior, refer to the DS2430A data sheet.

DS1971 BLOCK DIAGRAM Figure 1

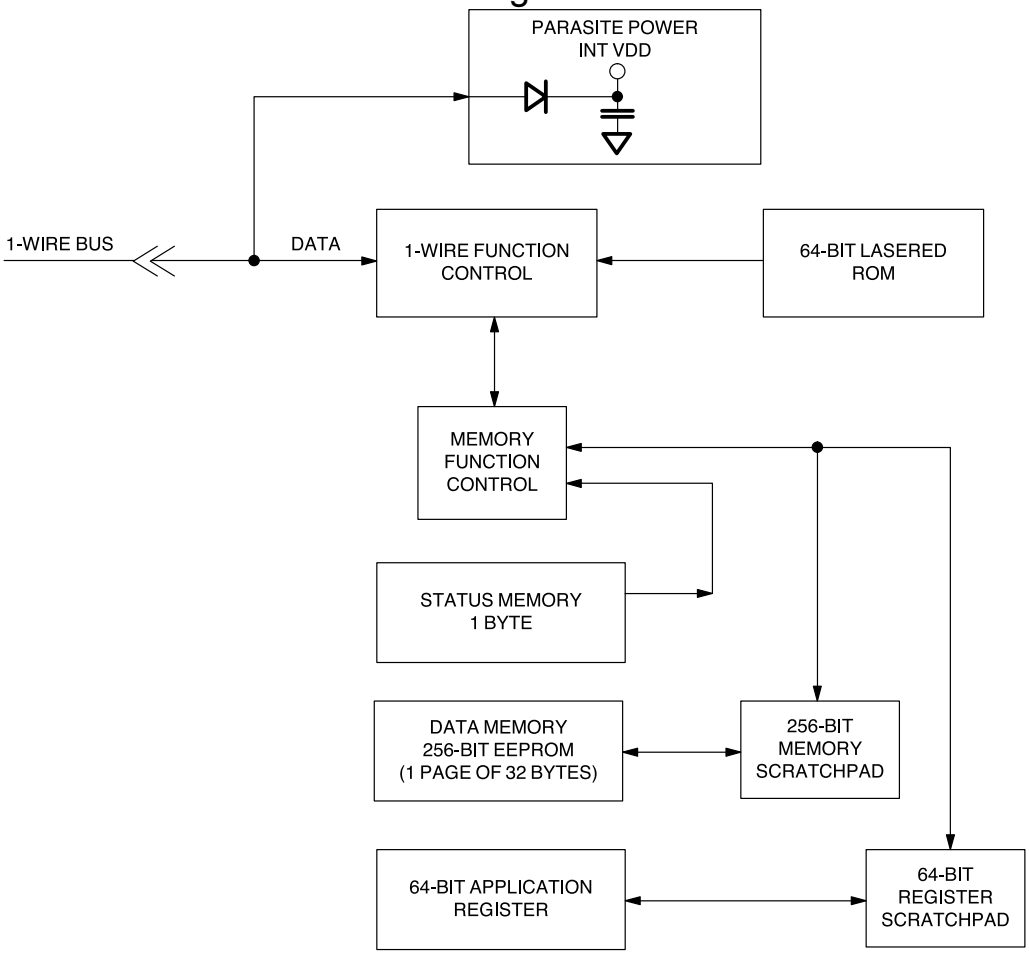

REVISION HISTORY

REVISION DATE	DESCRIPTION	PAGES CHANGED
071508	Updated the *F3 MicroCan* and *F5 MicroCan* face brands with the latest per PCN H020201.	1
7/09	Conversion to lead(Pb)-free; removal of bullet "Designed to meet UL#913 (4th Edit.)…."	1

Maxim cannot assume responsibility for use of any circuitry other than circuitry entirely embodied in a Maxim product. No circuit patent licenses are implied. Maxim reserves the right to change the circuitry and specifications without notice at any time.

Maxim Integrated Products, 120 San Gabriel Drive, Sunnyvale, CA 94086 408-737-7600

© 2009 Maxim Integrated Products Maxim is a registered trademark of Maxim Integrated Products, Inc.