Evaluation Kit Available | Design Resources | Tools and Models | Support

Click here to ask an associate for production status of specific part numbers.

50ppm/°C Precision Micropower Shunt Voltage References with Multiple Reverse Breakdown Voltages

LM4050/LM4051

General Description

The LM4050/LM4051 are precision two-terminal, shunt-mode, bandgap voltage references available in fixed reverse breakdown voltages of 1.225V, 2.048V, 2.500V, 3.000V, 3.3V, 4.096V, and 5.000V. Ideal for space-critical applications, the LM4050/LM4051 are offered in the sub miniature 3-pin SC70 surface-mount packages (1.8mm x 1.8mm), 50% smaller than comparable devices in SOT23 surface-mount package (SOT23 versions are also available).

Laser-trimmed resistors ensure excellent initial accuracy. With a 50ppm/°C temperature coefficient, these devices are offered in three grades of initial accuracy ranging from 0.1% to 0.5%. The LM4050/LM4051 have a 60µA to 15mA shunt-current capability with low dynamic impedance, ensuring stable reverse breakdown voltage accuracy over a wide range of operating temperatures and currents. The LM4050/LM4051 do not require an external stabilizing capacitor while ensuring stability with any capacitive loads.

The LM4050/LM4051 specifications are guaranteed over the temperature range of -40°C to +125°C.

Applications

- Portable, Battery-Powered Equipment
- Notebook Computers
- Cell Phones
- Industrial Process Controls
- Automotive

Pin Configuration

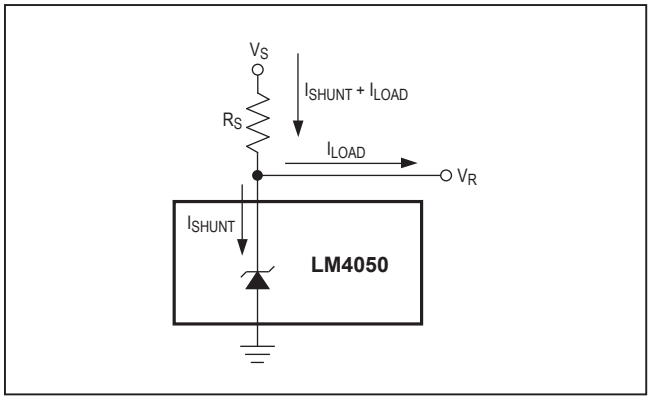

Features

- 50ppm/°C (max) Temperature Coefficient Guaranteed over the -40°C to +125°C Temperature Range
- Ultra-Small 3-Pin SC70 Package
- 0.1% (max) Initial Accuracy
- Wide Operating Current Range: 60µA to 15mA
- Low 28μV_{RMS} Output Noise (10Hz to 10kHz)
- 1.225V, 2.048V, 2.500V, 3.000V, 3.3V, 4.096V, and 5.000V Fixed Reverse Breakdown Voltages
- No Output Capacitors Required
- Tolerates Capacitive Loads
- AEC-Q100 Qualified, Refer to Ordering Information for the Specific /V Versions

Pin Configuration

TOP VIEW

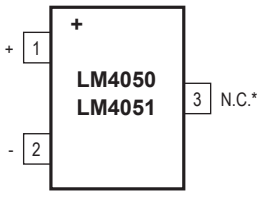

SC70/SOT23

*PIN 3 MUST BE LEFT UNCONNECTED OR CONNECTED TO PIN 2.

Ordering Information ***appears at end of data sheet.***

19-2563; Rev 16; 1/22

© 2022 Analog Devices, Inc. All rights reserved. Trademarks and registered trademarks are the property of their respective owners.

Absolute Maximum Ratings

Reverse Current (cathode to anode).....20mA
Forward Current (anode to cathode).....10mA
Continuous Power Dissipation (T_A = +70°C)
3-Pin SC70 (derate 2.9mW/°C above +70°C).....235.3mW
3-Pin SOT23 (derate 3mW/°C above +70°C) 238.1mW

Operating Temperature Range
LM4050/LM4051_E_ _ _ ..... -40°C to +125°C
Storage Temperature Range ..... -65°C to +150°C
Junction Temperature .....+150°C
Lead Temperature (soldering, 10s).....+300°C
Soldering Temperature (reflow) .....+260°C

Stresses beyond those listed under "Absolute Maximum Ratings" may cause permanent damage to the device. These are stress ratings only, and functional operation of the device at these or any other conditions beyond those indicated in the operational sections of the specifications is not implied. Exposure to absolute maximum rating conditions for extended periods may affect device reliability.

Package Information

3 SOT23

PACKAGE CODE	U3+1
Outline Number	21-0051
Land Pattern Number	90-0179
Thermal Resistance, Four-Layer Board:	
Junction to Ambient (θ_{JA})	336°C/W
Junction to Case (θ_{JC})	110.10°C/W

3 SC70

PACKAGE CODE	X3+2
Outline Number	21-0075
Land Pattern Number	90-0208
Thermal Resistance, Four-Layer Board:	
Junction to Ambient (θ_{JA})	340.40°C/W
Junction to Case (θ_{JC})	120°C/W

For the latest package outline information and land patterns (footprints), go to **www.maximintegrated.com/packages**. Note that a "+", "#", or "-" in the package code indicates RoHS status only. Package drawings may show a different suffix character, but the drawing pertains to the package regardless of RoHS status.

Package thermal resistances were obtained using the method described in JEDEC specification JESD51-7, using a four-layer board. For detailed information on package thermal considerations, refer to **www.maximintegrated.com/thermal-tutorial**.

Electrical Characteristics —1.225V

(I_R = 100µA, T_A = T_{MIN} to T_{MAX}, unless otherwise noted. Typical values are at T_A = +25°C.) (Note 2)

PARAMETER	SYMBOL	CONDITIONS		MIN	TYP	MAX	UNITS
Reverse Breakdown Voltage	V_R	T_A = +25°C	LM4051A (0.1%)	1.2238	1.2250	1.2262	V
			LM4051B (0.2%)	1.2226	1.2250	1.2275	
			LM4051C (0.5%)	1.2189	1.2250	1.2311	
Reverse Breakdown Voltage Tolerance (Note 3)	V_{RTOL}	LM4051A			±1.2	±7	mV
		LM4051B			±2.4	±9	
		LM4051C			±6.0	±12	
Minimum Operating Current	I_{RMIN}				45	60	µA
Average Reverse Voltage Temperature Coefficient (Notes 3, 4)	$\Delta V_R/\Delta T$	I_R = 10mA			±20		ppm/°C
		I_R = 1mA			±15	±50	
		I_R = 100µA			±15		
Reverse Breakdown Voltage Change with Operating Current Change		$I_{RMIN} \le I_R \le$ 1mA			0.7	1.5	mV
		1mA ≤ $I_R \le$ 12mA			2.5	8.0	
Reverse Dynamic Impedance (Note 4)	Z_R	I_R = 1mA, f = 120Hz, $I_{AC} = 0.1I_R$			0.5	1.5	Ω
Wideband Noise	e_N	I_R = 100µA, 10Hz ≤ f ≤ 10kHz			20		μV_{RMS}
Reverse Breakdown Voltage Long-Term Stability	ΔV_R	T = 1000h			120		ppm

Electrical Characteristics —2.048V

(I_R = 100µA, T_A = T_{MIN} to T_{MAX}, unless otherwise noted. Typical values are at T_A = +25°C.) (Note 2)

PARAMETER	SYMBOL	CONDITIONS		MIN	TYP	MAX	UNITS
Reverse Breakdown Voltage	V_R	T_A = +25°C	LM4050A (0.1%)	2.0460	2.0480	2.0500	V
			LM4050B (0.2%)	2.0439	2.0480	2.0521	
			LM4050C (0.5%)	2.0378	2.0480	2.0582	
Reverse Breakdown Voltage Tolerance (Note 3)	V_{RTOL}	LM4050A			±2.0	±12	mV
		LM4050B			±4.0	±14	
		LM4050C			±10	±20	
Minimum Operating Current	I_{RMIN}				45	65	µA
Average Reverse Voltage Temperature Coefficient (Notes 3, 4)	$\Delta V_R/\Delta T$	I_R = 10mA			±20		ppm/°C
		I_R = 1mA			±15	±50	
		I_R = 100µA			±15		
Reverse Breakdown Voltage Change with Operating Current Change		$I_{RMIN} \le I_R \le$ 1mA			0.3	1.0	mV
		1mA ≤ $I_R \le$ 15mA			2.5	8.0	
Reverse Dynamic Impedance (Note 4)	Z_R	I_R = 1mA, f = 120Hz, $I_{AC} = 0.1I_R$	LM4050A/B		0.3	0.8	Ω
			LM4050C		0.3	0.9	
Wideband Noise	e_N	I_R = 100µA, 10Hz ≤ f ≤ 10kHz			28		μV_{RMS}
Reverse Breakdown Voltage Long-Term Stability	ΔV_R	T = 1000h			120		ppm

Electrical Characteristics—2.500V

(I_R = 100µA, T_A = T_{MIN} to T_{MAX}, unless otherwise noted. Typical values are at T_A = +25°C.) (Note 2)

PARAMETER	SYMBOL	CONDITIONS		MIN	TYP	MAX	UNITS
Reverse Breakdown Voltage	V_R	T_A = +25°C	LM4050A (0.1%)	2.4975	2.5000	2.5025	V
			LM4050B (0.2%)	2.4950	2.5000	2.5050	
			LM4050C (0.5%)	2.4875	2.5000	2.5125	
Reverse Breakdown Voltage Tolerance (Note 3)	V_{RTOL}	LM4050A			±2.5	±15	mV
		LM4050B			±5.0	±18	
		LM4050C			±13	±25	
Minimum Operating Current	I_{RMIN}				45	65	µA
Average Reverse Voltage Temperature Coefficient (Notes 3, 4)	$\Delta V_R/\Delta T$	I_R = 10mA			±20		ppm/°C
		I_R = 1mA			±15	±50	
		I_R = 100µA			±15		
Reverse Breakdown Voltage Change with Operating Current Change		$I_{RMIN} \le I_R \le$ 1mA			0.3	1.0	mV
		1mA ≤ $I_R \le$ 15mA			2.5	8.0	
Reverse Dynamic Impedance (Note 4)	Z_R	I_R = 1mA, f = 120Hz, $I_{AC} = 0.1I_R$	LM4050A/B		0.3	0.8	Ω
			LM4050C		0.3	0.9	
Wideband Noise	e_N	I_R = 100µA, 10Hz ≤ f ≤ 10kHz			35		μV_{RMS}
Reverse Breakdown Voltage Long-Term Stability	ΔV_R	T = 1000h			120		ppm

Electrical Characteristics—3.000V

(I_R = 100µA, T_A = T_{MIN} to T_{MAX}, unless otherwise noted. Typical values are at T_A = +25°C.) (Note 2)

PARAMETER	SYMBOL	CONDITIONS		MIN	TYP	MAX	UNITS
Reverse Breakdown Voltage	V_R	T_A = +25°C	LM4050A (0.1%)	2.9970	3.0000	3.0030	V
			LM4050B (0.2%)	2.9940	3.0000	3.0060	
			LM4050C (0.5%)	2.9850	3.0000	3.0150	
Reverse Breakdown Voltage Tolerance (Note 3)	V_{RTOL}	LM4050A			±3.0	±18	mV
		LM4050B			±6.0	±21	
		LM4050C			±15	±30	
Minimum Operating Current	I_{RMIN}				45	67	µA
Average Reverse Voltage Temperature Coefficient (Notes 3, 4)	$\Delta V_R/\Delta T$	I_R = 10Ma			±20		ppm/°C
		I_R = 1mA			±15	±50	
		I_R = 100µA			±15		
Reverse Breakdown Voltage Change with Operating Current Change		$I_{RMIN} \le I_R \le$ 1mA			0.3	1.0	mV
		1mA ≤ $I_R \le$ 15mA			2.5	8.0	
Reverse Dynamic Impedance (Note 4)	Z_R	I_R = 1mA, f = 120Hz, $I_{AC} = 0.1I_R$	LM4050A/B		0.3	0.8	Ω
			LM4050C		0.3	0.9	
Wideband Noise	e_N	I_R = 100µA, 10Hz ≤ f ≤ 10kHz			45		μV_{RMS}
Reverse Breakdown Voltage Long-Term Stability	ΔV_R	T = 1000h			120		ppm

Electrical Characteristics—3.300V

(I_R = 100µA, T_A = T_{MIN} to T_{MAX}, unless otherwise noted. Typical values are at T_A = +25°C.) (Note 2)

PARAMETER	SYMBOL	CONDITIONS		MIN	TYP	MAX	UNITS
Reverse Breakdown Voltage	V_R	T_A = +25°C	LM4050A (0.1%)	3.2967	3.3000	3.3033	V
			LM4050B (0.2%)	3.2934	3.3000	3.3066	
			LM4050C (0.5%)	3.2835	3.3000	3.3165	
Reverse Breakdown Voltage Tolerance (Note 3)	V_{RTOL}	LM4050A			±3.0	±18	mV
		LM4050B			±6.0	±21	
		LM4050C			±15	±30	
Minimum Operating Current	I_{RMIN}				45	67	µA
Average Reverse Voltage Temperature Coefficient (Notes 3, 4)	$\Delta V_R/\Delta T$	I_R = 10mA			±20		ppm/°C
		I_R = 1mA			±15	±50	
		I_R = 100µA			±15		
Reverse Breakdown Voltage Change with Operating Current Change		$I_{RMIN} \le I_R \le$ 1mA			0.3	1.0	mV
		1mA ≤ $I_R \le$ 15mA			2.5	8.0	
Reverse Dynamic Impedance (Note 4)	Z_R	I_R = 1mA, f = 120Hz, $I_{AC} = 0.1I_R$	LM4050A/B		0.3	0.8	Ω
			LM4050C		0.3	0.9	
Wideband Noise	e_N	I_R = 100µA, 10Hz ≤ f ≤ 10kHz			50		μV_{RMS}
Reverse Breakdown Voltage Long-Term Stability	ΔV_R	T = 1000h			120		ppm

Electrical Characteristics—4.096V

(I_R = 100µA, T_A = T_{MIN} to T_{MAX}, unless otherwise noted. Typical values are at T_A = +25°C.) (Note 2)

PARAMETER	SYMBOL	CONDITIONS		MIN	TYP	MAX	UNITS
Reverse Breakdown Voltage	V_R	T_A = +25°C	LM4050A (0.1%)	4.0919	4.0960	4.1001	V
			LM4050B (0.2%)	4.0878	4.0960	4.1042	
			LM4050C (0.5%)	4.0755	4.0960	4.1165	
Reverse Breakdown Voltage Tolerance (Note 3)	V_{RTOL}	LM4050A			±4.1	±25	mV
		LM4050B			±8.2	±29	
		LM4050C			±20	±41	
Minimum Operating Current	I_{RMIN}				50	73	µA
Average Reverse Voltage Temperature Coefficient (Notes 3, 4)	$\Delta V_R/\Delta T$	I_R = 10mA			±30		ppm/°C
		I_R = 1mA			±20	±50	
		I_R = 100µA			±15		
Reverse Breakdown Voltage Change with Operating Current Change		$I_{RMIN} \le I_R \le$ 1mA			0.5	1.2	mV
		1mA ≤ $I_R \le$ 15mA			3.0	10.0	
Reverse Dynamic Impedance (Note 4)	Z_R	I_R = 1mA, f = 120Hz, $I_{AC} = 0.1I_R$			0.5	1.0	Ω
Wideband Noise	e_N	I_R = 100µA, 10Hz ≤ f ≤ 10kHz			64		μV_{RMS}
Reverse Breakdown Voltage Long-Term Stability	ΔV_R	T = 1000h			120		ppm

Electrical Characteristics—5.000V

(I_R = 100µA, T_A = T_{MIN} to T_{MAX}, unless otherwise noted. Typical values are at T_A = +25°C.) (Note 2)

PARAMETER	SYMBOL	CONDITIONS		MIN	TYP	MAX	UNITS
Reverse Breakdown Voltage	V_R	T_A = +25°C	LM4050A (0.1%)	4.9950	5.0000	5.0050	V
			LM4050B (0.2%)	4.9900	5.0000	5.0100	
			LM4050C (0.5%)	4.9750	5.0000	5.0250	
Reverse Breakdown Voltage Tolerance (Note 3)	V_{RTOL}	LM4050A			±5.0	±30	mV
		LM4050B			±10	±35	
		LM4050C			±25	±50	
Minimum Operating Current	I_{RMIN}				54	80	µA
Average Reverse Voltage Temperature Coefficient (Notes 3, 4)	$\Delta V_R/\Delta T$	I_R = 10mA			±30		ppm/°C
		I_R = 1mA			±20	±50	
		I_R = 100µA			±15		
Reverse Breakdown Voltage Change with Operating Current Change		$I_{RMIN} \le I_R \le$ 1mA			0.5	1.4	mV
		1mA ≤ $I_R \le$ 15mA			3.5	12.0	
Reverse Dynamic Impedance (Note 4)	Z_R	I_R = 1mA, f = 120Hz, $I_{AC} = 0.1I_R$			0.5	1.1	Ω
Wideband Noise	e_N	I_R = 100µA, 10Hz ≤ f ≤ 10kHz			80		μV_{RMS}
Reverse Breakdown Voltage Long-Term Stability	ΔV_R	T = 1000h			120		ppm

Note 2: All devices are 100% production tested at +25°C and are guaranteed by design for T_A = T_{MIN} to T_{MAX}, as specified.

Note 3: The limit over the full temperature range for the reverse breakdown voltage tolerance is defined as:

$$[V_{RTOL}] \pm[(\Delta V_R / \Delta T) \text{ X } (\max\Delta T) \text{ X } (V_R)]$$

where $\Delta V_R / \Delta T$ is the V_R temperature coefficient, $\max\Delta T$ is the difference from the +25°C reference point to T_{MIN} or T_{MAX}, and V_R is the reverse breakdown voltage.

The total tolerance over the full temperature range for the different grades where $\max\Delta T$ = +100°C is shown below:

- A grade: ±0.6% = ±0.1% ±50ppm/°C x 100°C
- B grade: ±0.7% = ±0.2% ±50ppm/°C x 100°C
- C grade: ±1.0% = ±0.5% ±50ppm/°C x 100°C

Note 4: Guaranteed by design.

Typical Operating Characteristics

(I_R = 100µA, SC70-3 package, T_A = +25°C, unless otherwise noted.)

REVERSE CHARACTERISTICS AND MINIMUM OPERATING CURRENT

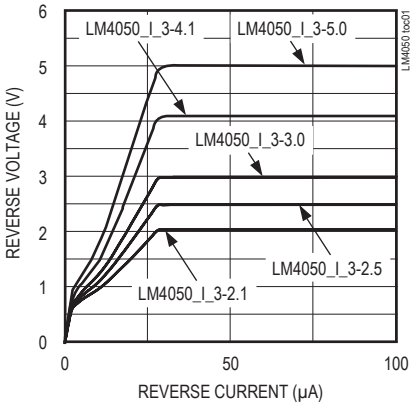

OUTPUT VOLTAGE vs. TEMPERATURE (V_{OUT} = 2.500V)

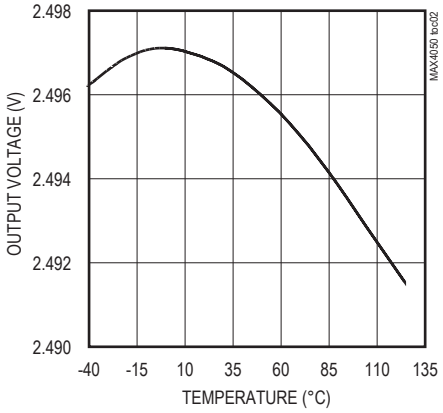

OUTPUT VOLTAGE vs. TEMPERATURE (V_{OUT} = 5.000V)

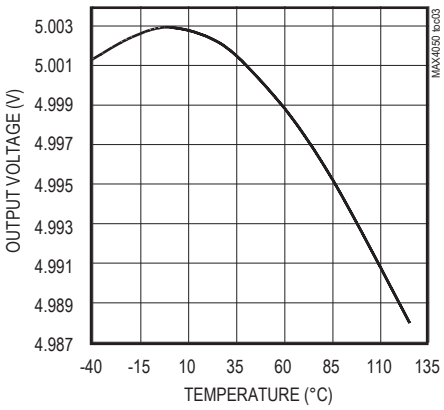

LM4050-2.5V REVERSE VOLTAGE vs. I_{SHUNT}

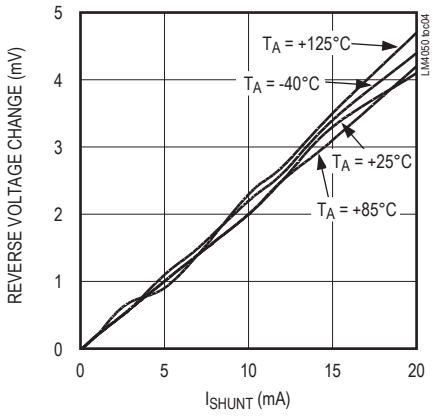

LM4050-5.0V REVERSE VOLTAGE vs. I_{SHUNT}

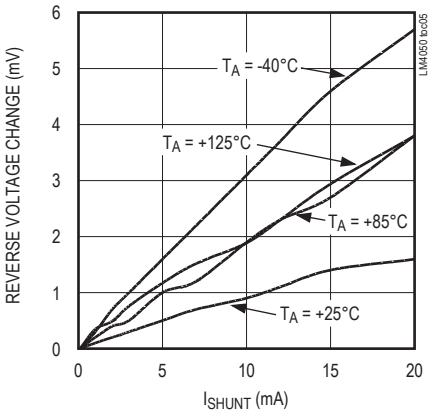

Typical Operating Characteristics (continued)

(I_R = 100µA, SC70-3 package, T_A = +25°C, unless otherwise noted.)

LM4050-2.5V LOAD-TRANSIENT RESPONSE

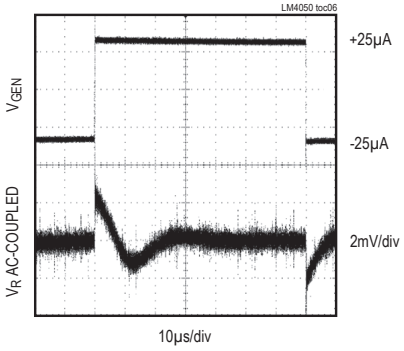

CH1: V_{GEN} 2V/div
CH2: V_R AC-COUPLED 2mV/div
I_{SHUNT} = 100µA 25µA, R_L = 100kΩ, SEE FIGURE 1.

LM4050-5.0V LOAD-TRANSIENT RESPONSE

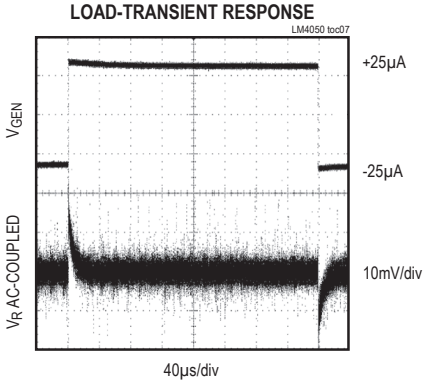

I_{SHUNT} = 100µA ±25µA
R_L = 100kΩ, SEE FIGURE 1.

LM4050-2.5V LOAD-TRANSIENT RESPONSE

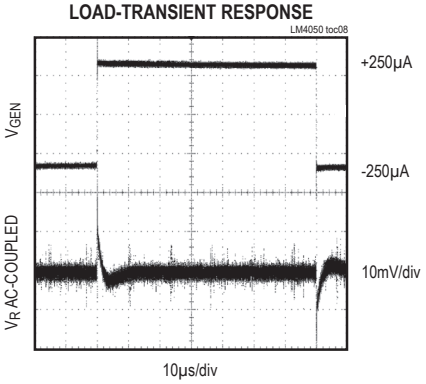

I_{SHUNT} = 1mA ±250µA
R_L = 10kΩ, SEE FIGURE 1.

LM4050-5.0V LOAD-TRANSIENT RESPONSE

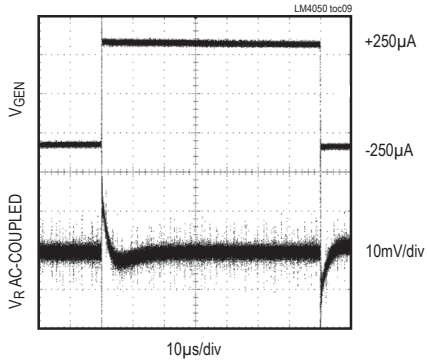

I_{SHUNT} = 1mA ±250µA
R_L = 10kΩ, SEE FIGURE 1.

LM4050-2.5V LOAD-TRANSIENT RESPONSE

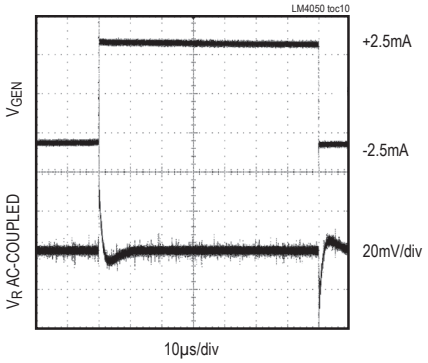

I_{SHUNT} = 10mA ±2.5µA
R_L = 1kΩ, SEE FIGURE 1.

LM4050-5.0V LOAD-TRANSIENT RESPONSE

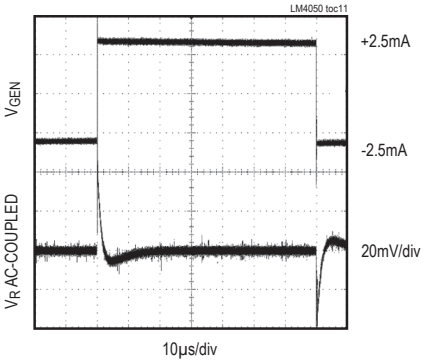

I_{SHUNT} = 10mA ±2.5mA
R_L = 1kΩ, SEE FIGURE 1.

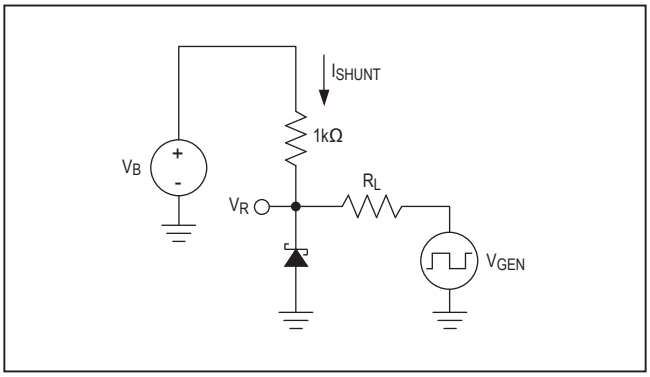

Figure 1. Load-Transient Test Circuit

Typical Operating Characteristics (continued)

(I_R = 100µA, SC70-3 package, T_A = +25°C, unless otherwise noted.)

LM4050-2.5V STARTUP CHARACTERISTICS

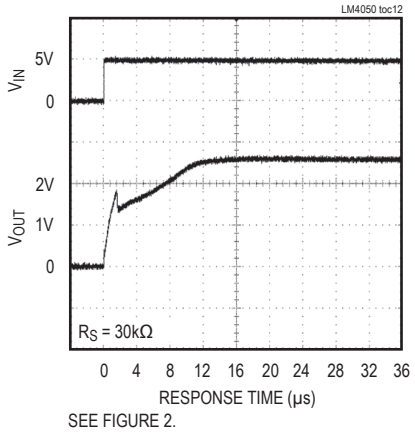

SEE FIGURE 2.

LM4050-5.0V STARTUP CHARACTERISTICS

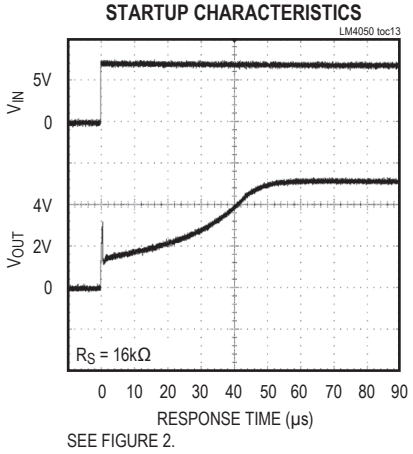

SEE FIGURE 2.

LM4050-2.5V OUTPUT IMPEDANCE vs. FREQUENCY

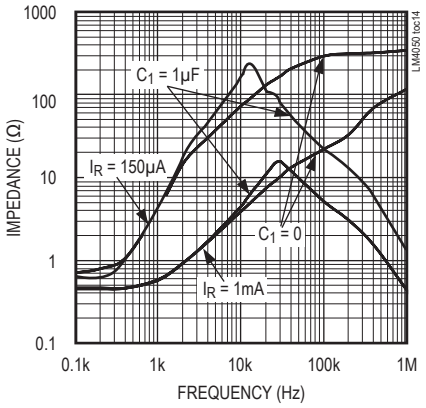

LM4050-5.0V OUTPUT IMPEDANCE vs. FREQUENCY

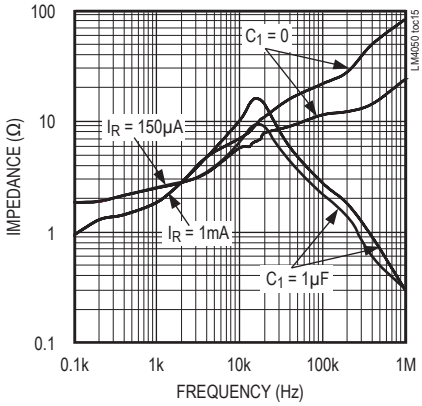

LM4050-2.5V NOISE vs. FREQUENCY

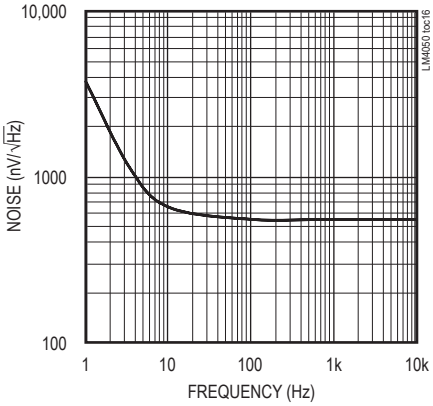

LM4050-5.0V NOISE vs. FREQUENCY

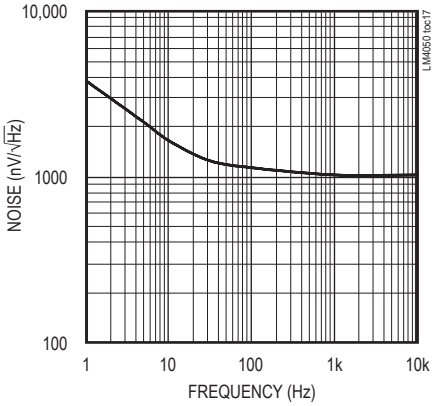

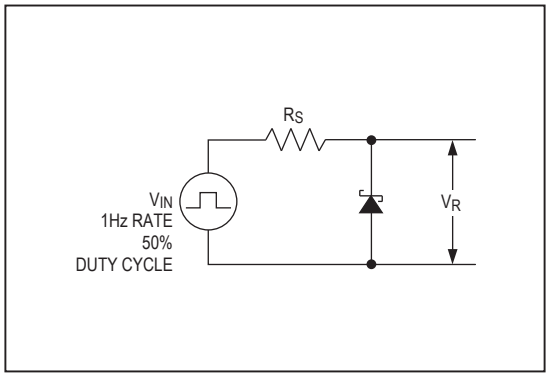

Figure 2. Startup Characteristics Test Circuit

Pin Description

PIN	NAME	FUNCTION
1	+	Positive Terminal of the Shunt Reference
2	–	Negative Terminal of the Shunt Reference
3	N.C.	No connection. Leave this pin unconnected or connected to pin 2.

Detailed Description

The LM4050/LM4051 shunt references use the bandgap principle to produce a stable, accurate voltage. The device behaves similarly to an ideal zener diode; a fixed voltage is maintained across its output terminals when biased with 60µA to 15mA of reverse current. The LM4050/LM4051 clamps to a voltage of one diode drop below ground when biased with forward currents up 10mA.

Figure 3 shows a typical operating circuit. The LM4050/LM4051 are ideal for providing stable references from a high-voltage power supply.

Applications Information

The LM4050/LM4051s' internal pass transistors are used to maintain a constant output voltage (V_{SHUNT}) by sinking the necessary amount of current across a source resistor. The source resistance (R_S) is determined from the load current (I_{LOAD}) range, supply voltage (V_S) variations, V_{SHUNT}, and desired quiescent current.

Choose the value of R_S when V_S is at a minimum and I_{LOAD} is at a maximum. Maintain a minimum I_{SHUNT} of 60µA at all times. The R_S value should be large enough to keep I_{SHUNT} less than 15mA for proper regulation when V_S is maximum and I_{LOAD} is at a minimum. To prevent damage to the device, I_{SHUNT} should never exceed 20mA.

Therefore, the value of RS is bounded by the following equation:

$$[V_{S(MIN)} - V_R] / [60\mu A + I_{LOAD(MAX)}] > R_S > [V_{S(MAX)} - V_R] / [20mA + I_{LOAD(MIN)}]$$

Choosing a larger resistance minimizes the total power dissipation in the circuit by reducing the shunt current ($P_{D(TOTAL)} = V_S \times I_{SHUNT}$). Provide a safety margin to incorporate the worst-case tolerance of the resistor used. Ensure that the resistor's power rating is adequate, using the following general power equation:

$$PD_R = I_{SHUNT} \times (V_{S(MAX)} - V_{SHUNT})$$

Output Capacitance

The LM4050/LM4051 do not require external capacitors for frequency stability and are stable for any output capacitance.

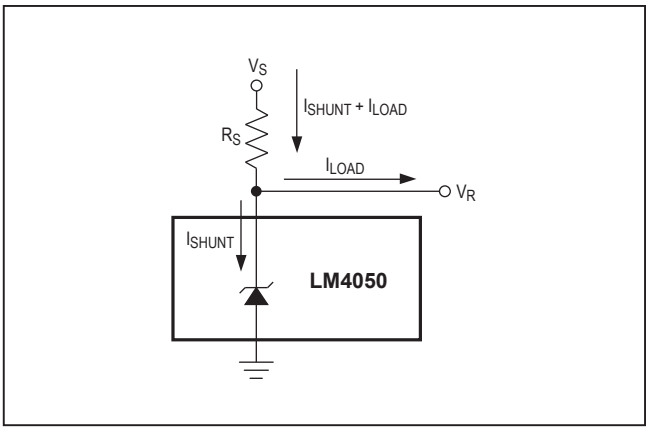

Figure 3. Typical Operating Circuit

Temperature Performance

The LM4050/LM4051 typically exhibit output voltage temperature coefficients within ±15ppm/°C. The polarity of the temperature coefficients may be different from one device to another; some may have positive coefficients, and others may have negative coefficients.

High Temperature Operation

The maximum junction temperature of the LM4050/LM4051 is +150°C. The maximum operating temperature for the LM4050/LM4051_E_ is +125°C. At a maximum load current of 15mA and a maximum output voltage of 5V, the parts dissipate 75mW of power. The power dissipation limits of the 3-pin SC70 call for a derating value of 2.17mW/°C above +70°C and thus for 75mW of power dissipation, the parts self-heat to 35.56°C above ambient temperature. If the ambient temperature is +125°C, the parts operate at 159.56°C, thereby exceeding the maximum junction temperature value of +150°C. For high-temperature operation, care must be taken to ensure the combination of ambient temperature, output power dissipation, and package thermal resistance does not conspire to raise the device temperature beyond that listed in the *Absolute Maximum Ratings*. Either reduce the output load current or the ambient temperature to keep the part within the limits.

Ordering Information

PART	OUTPUT VOLTAGE (V)	INITIAL ACCURACY (%)	TEMPCO (ppm/_C)	TEMP RANGE	PIN-PACKAGE	TOP MARK
LM4050AEM3-2.1+T	2.048	0.1	50	-40°C to +125°C	3 SOT23	FZTR
LM4050AEM3-2.1/V+T	2.048	0.1	50	-40°C to +125°C	3 SOT23	+FZXW
LM4050AEX3-2.1+T	2.048	0.1	50	-40°C to +125°C	3 SC70	ASM
LM4050BEM3-2.1+T	2.048	0.2	50	-40°C to +125°C	3 SOT23	FZTS
LM4050BEX3-2.1+T	2.048	0.2	50	-40°C to +125°C	3 SC70	ASN
LM4050CEM3-2.1+T	2.048	0.5	50	-40°C to +125°C	3 SOT23	FZTT
LM4050CEX3-2.1+T	2.048	0.5	50	-40°C to +125°C	3 SC70	ASO
LM4050AEM3-2.5+T	2.500	0.1	50	-40°C to +125°C	3 SOT23	FZTU
LM4050AEM3-2.5/V+T	2.500	0.1	50	-40°C to +125°C	3 SOT23	FZXY
LM4050AEX3-2.5+T	2.500	0.1	50	-40°C to +125°C	3 SC70	ASP
LM4050AEX3-2.5/V+T	2.500	0.1	50	-40°C to +125°C	3 SC70	+AUE
LM4050BEM3-2.5+T	2.500	0.2	50	-40°C to +125°C	3 SOT23	FZTV
LM4050BEM3-2.5/V+T	2.500	0.2	50	-40°C to +125°C	3 SOT23	FZXS
LM4050BEX3-2.5+T	2.500	0.2	50	-40°C to +125°C	3 SC70	ASQ
LM4050BEX3-2.5/V+T	2.500	0.2	50	-40°C to +125°C	3 SC70	+AVN
LM4050CEM3-2.5+T	2.500	0.5	50	-40°C to +125°C	3 SOT23	FZTW
LM4050CEX3-2.5+T	2.500	0.5	50	-40°C to +125°C	3 SC70	ASR
LM4050AEM3-3.0+T	3.000	0.1	50	-40°C to +125°C	3 SOT23	FZTX
LM4050AEX3-3.0+T	3.000	0.1	50	-40°C to +125°C	3 SC70	ASS
LM4050BEM3-3.0+T	3.000	0.2	50	-40°C to +125°C	3 SOT23	FZTY
LM4050BEM3-3.0/V+T	3.000	0.2	50	-40°C to +125°C	3 SOT23	+FZVG
LM4050BEX3-3.0+T	3.000	0.2	50	-40°C to +125°C	3 SC70	AST
LM4050CEM3-3.0+T	3.000	0.5	50	-40°C to +125°C	3 SOT23	FZTZ
LM4050CEX3-3.0+T	3.000	0.5	50	-40°C to +125°C	3 SC70	ASU
LM4050AEX3-3.3+T	3.300	0.1	50	-40°C to +125°C	3 SC70	AOJ
LM4050AEX3-3.3/V+T	3.300	0.1	50	-40°C to +125°C	3 SC70	+AUE
LM4050BEX3-3.3+T	3.300	0.2	50	-40°C to +125°C	3 SC70	AOK
LM4050CEX3-3.3+T	3.300	0.5	50	-40°C to +125°C	3 SC70	AOL
LM4050CEX3-3.3/V+T	3.300	0.5	50	-40°C to +125°C	3 SC70	+AUE
LM4050AEM3-4.1+T	4.096	0.1	50	-40°C to +125°C	3 SOT23	FZUA
LM4050AEM3-4.1/V+T	4.096	0.1	50	-40°C to +125°C	3 SOT23	+FZXU
LM4050AEX3-4.1+T	4.096	0.1	50	-40°C to +125°C	3 SC70	ASV
LM4050BEM3-4.1+T	4.096	0.2	50	-40°C to +125°C	3 SOT23	FZUB
LM4050BEM3-4.1/V+T	4.096	0.2	50	-40°C to +125°C	3 SOT23	+FZVL
LM4050BEX3-4.1+T	4.096	0.2	50	-40°C to +125°C	3 SC70	ASW
LM4050CEM3-4.1+T	4.096	0.5	50	-40°C to +125°C	3 SOT23	FZUC

Ordering Information (continued)

PART	OUTPUT VOLTAGE (V)	INITIAL ACCURACY (%)	TEMPCO (ppm/_C)	TEMP RANGE	PIN-PACKAGE	TOP MARK
LM4050CEX3-4.1+T	4.096	0.5	50	-40°C to +125°C	3 SC70	ASX
LM4050AEM3-5.0+T	5.000	0.1	50	-40°C to +125°C	3 SOT23	FZUD
LM4050AEM3-5.0/V+T	5.000	0.1	50	-40°C to +125°C	3 SOT23	+FZXL
LM4050AEX3-5.0+T	5.000	0.1	50	-40°C to +125°C	3 SC70	ASY
LM4050BEM3-5.0+T	5.000	0.2	50	-40°C to +125°C	3 SOT23	FZUE
LM4050BEX3-5.0+T	5.000	0.2	50	-40°C to +125°C	3 SC70	ASZ
LM4050CEM3-5.0+T	5.000	0.5	50	-40°C to +125°C	3 SOT23	FZUF
LM4050CEM3-5.0/V+T	5.000	0.5	50	-40°C to +125°C	3 SOT23	+FZVM
LM4050CEX3-5.0+T	5.000	0.5	50	-40°C to +125°C	3 SC70	ATA
LM4051AEM3-1.2+T	1.225	0.1	50	-40°C to +125°C	3 SOT23	FZTO
LM4051AEX3-1.2+T	1.225	0.1	50	-40°C to +125°C	3 SC70	ASJ
LM4051BEM3-1.2+T	1.225	0.2	50	-40°C to +125°C	3 SOT23	FZTP
LM4051BEX3-1.2+T	1.225	0.2	50	-40°C to +125°C	3 SC70	ASK
LM4051CEM3-1.2+T	1.225	0.5	50	-40°C to +125°C	3 SOT23	FZTQ
LM4051CEX3-1.2+T	1.225	0.5	50	-40°C to +125°C	3 SC70	ASL

Chip Information

PROCESS: BiCMOS

Revision History

REVISION NUMBER	REVISION DATE	DESCRIPTION	PAGES CHANGED
0	7/02	Initial release	—
4	5/09	Added lead-free notation and corrected topmarks in the *Ordering Information* and *Selector Guide* sections	1, 12
5	5/11	Added automotive packages and updated the *Absolute Maximum Ratings*.	1, 2
6	9/11	Added automotive packages to *Selector Guide* and *Ordering Information*.	1, 12
7	1/13	Removed *Selector Guide* and revised *Ordering Information*.	1, 12
8	11/14	Added LM4050AEM3-5.0/V+T to *Ordering Information*.	13
9	11/17	Added AEC qualification statement to Benefits and Features and updated *Ordering Information* table	1, 13
10	2/18	Added *Package Thermal Characteristics* section, updated *Absolute Maximum Ratings* section, and *Electrical Characteristics* table	2–5
11	4/18	Updated *Ordering Information* table	12
12	2/19	Updated *Applications* and added *Package Information*	1, 2
13	3/19	Updated *Ordering Information*	12
14	5/19	Deleted *Package Thermal Characteristics* and old *Package Information* sections, updated *Ordering Information*	2, 12, 13
15	7/20	Updated *Package Information* and *Ordering Information*	2, 12
16	1/22	Updated *Ordering Information*	12

Information furnished by Analog Devices is believed to be accurate and reliable. However, no responsibility is assumed by Analog Devices for its use, nor for any infringements of patents or other rights of third parties that may result from its use.Specifications subject to change without notice. No license is granted by implicationor otherwise under any patent or patent rights of Analog Devices. Trademarks andregistered trademarks are the property of their respective owners.