19-0367; Rev 1; 5/06

20µA, 1/8-Unit-Load, Slew-Rate-Limited RS-485 Transceivers

General Description

The MAX1482 and MAX1483 are low-power transceivers for RS-485 and RS-422 communication. Both feature slew-rate-limited drivers that minimize EMI and reduce reflections caused by improperly terminated cables. Data rates are guaranteed up to 250kbps.

The MAX1482/MAX1483 draw only 20µA of supply current. Additionally, they have a low-current shutdown mode that consumes only 0.1µA. Both parts operate from a single +5V supply.

Drivers are short-circuit current limited and are protected against excessive power dissipation by thermal shutdown circuitry that places the driver outputs into a high-impedance state. The receiver input has a fail-safe feature that guarantees a logic-high output if the input is open circuit.

The MAX1482 is full duplex and the MAX1483 is half duplex. Both parts have a 1/8-unit-load input impedance that guarantees up to 256 transceivers on the bus.

Applications

Low-Power RS-485/RS-422 Networks

Transceivers for EMI-Sensitive Applications

Industrial-Control Local Area Networks

Large 256-Node LANs

Features

- **Low 20µA Operating Current**
- **Slew-Rate Limited for Reduced EMI and Reduced Reflections**
- **0.1µA Low-Current Shutdown Mode**
- **Designed for RS-485 and RS-422 Applications**
- **Operate from a Single +5V Supply**
- **-7V to +12V Common-Mode Input Voltage Range**
- **Allows up to 256 Transceivers on the Bus—Guaranteed (1/8-unit load)**
- **Current Limiting and Thermal Shutdown for Driver Overload Protection**

Ordering Information

PART	TEMP RANGE	PIN-PACKAGE	PKG CODE
MAX1482CPD	0°C to +70°C	14 PDIP	P14-3
MAX1482CSD	0°C to +70°C	14 SO	S14-4
MAX1482EPD	-40°C to +85°C	14 PDIP	P14-3
MAX1482ESD	-40°C to +85°C	14 SO	S14-4
MAX1483CPA	0°C to +70°C	8 PDIP	P8-1
MAX1483CSA	0°C to +70°C	8 SO	S8-5
MAX1483CUA	0°C to +70°C	8 µMAX®	U8-1
MAX1483EPA	-40°C to +85°C	8 PDIP	P8-1
MAX1483ESA	-40°C to +85°C	8 SO	S8-5

Typical Operating Circuits

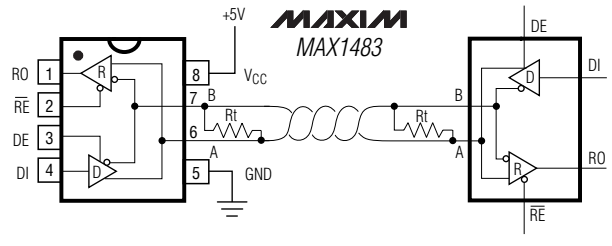

NOTE: PIN LABELS Y AND Z ON TIMING, TEST, AND WAVEFORM DIAGRAMS REFER TO PINS A AND B WHEN DE IS HIGH. TYPICAL OPERATING CIRCUIT SHOWN WITH DIP/SO PACKAGE.

MAX1482 appears at end of data sheet.

Pin Configurations

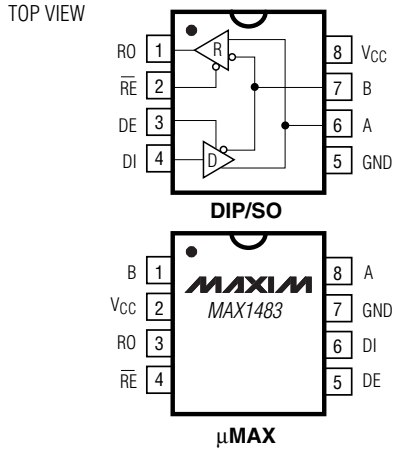

MAX1482 appears at end of data sheet.

µMAX is a registered trademark of Maxim Integrated products, Inc.

For pricing, delivery, and ordering information, please contact Maxim/Dallas Direct! at 1-888-629-4642, or visit Maxim's website at www.maxim-ic.com.

20µA, 1/8-Unit-Load, Slew-Rate-Limited RS-485 Transceivers

ABSOLUTE MAXIMUM RATINGS

Supply Voltage (V_{CC}) 7V
Control Input Voltages (RE, DE) ..... -0.5V to (V_{CC} + 0.5V)
Driver Input Voltage (DI) ..... -0.5V to (V_{CC} + 0.5V)
Driver Output Voltages ..... -7.5V to 12.5V
Receiver Input Voltages (A, B) ..... -7.5V to 12.5V
Receiver Output Voltage (RO) ..... -0.5V to (V_{CC} + 0.5V)
Continuous Power Dissipation (T_A = +70°C)
8-Pin Plastic DIP (derate 9.09mW/°C above +70°C) 727mW
14-Pin Plastic DIP (derate 10.00mW/°C above +70°C) 800mW
8-Pin SO (derate 5.88mW/°C above +70°C) 471mW
14-Pin SO (derate 8.33mW/°C above +70°C) 667mW
8-Pin µMAX (derate 4.10mW/°C above +70°C) 330mW
Operating Temperature Ranges
MAX148_C_ _ ..... 0°C to +70°C
MAX148_E_ _ ..... -40°C to +85°C
Storage Temperature Range ..... -65°C to +160°C
Lead Temperature (soldering, 10sec) ..... +300°C

Stresses beyond those listed under "Absolute Maximum Ratings" may cause permanent damage to the device. These are stress ratings only, and functional operation of the device at these or any other conditions beyond those indicated in the operational sections of the specifications is not implied. Exposure to absolute maximum rating conditions for extended periods may affect device reliability.

DC ELECTRICAL CHARACTERISTICS

(V_{CC} = 5V ±5%, T_A = T_{MIN} to T_{MAX}, unless otherwise noted. Typical values are at T_A = +25°C.) (Note 1)

PARAMETER	SYMBOL	CONDITIONS		MIN	TYP	MAX	UNITS
Differential Driver Output (no load)	V_{OD1}					5	V
Differential Driver Output (with load)	V_{OD2}	R = 50Ω (RS-422), Figure 1		2		5	V
		R = 27Ω (RS-485), Figure 1		1.5		5	
Change in Magnitude of Driver Differential Output Voltage for Complementary Output States	ΔV_{OD}	R = 27Ω or 50Ω, Figure 1				0.2	V
Driver Common-Mode Output Voltage	V_{OC}	R = 27Ω or 50Ω, Figure 1				3	V
Change in Magnitude of Driver Common-Mode Output Voltage for Complementary Output States	ΔV_{OD}	R = 27Ω or 50Ω, Figure 1				0.2	V
Three-State (high impedance) Output Current at Driver	I_{OZD}	MAX1482 only, -7V < V_Y and V_Z < 12V				±50	µA
Logic Input High Voltage	V_{IH}	DE, DI, $\overline{RE}$		2.0			V
Logic Input Low Voltage	V_{IL}	DE, DI, $\overline{RE}$				0.8	V
Logic Input Current	I_{IN1}	DE, DI, $\overline{RE}$				±2	µA
Input Current (A, B)	I_{IN2}	MAX1482, DE = 0V, V_{CC} = 0V or 5.25V	V_{IN} = 12V			150	µA
			V_{IN} = -7V			-100	
		MAX1483, DE = 0V, V_{CC} = 0V or 5.25V	V_{IN} = 12V			200	
			V_{IN} = -7V			-150	
Receiver Differential Threshold Voltage	V_{TH}	-7V ≤ V_{CM} ≤ 12V		-0.2		0.2	V
Receiver Input Hysteresis	ΔV_{TH}	V_{CM} = 0V			75		mV
Receiver Output High Voltage	V_{OH}	I_O = -4mA, V_{ID} = 200mV		3.5			V
Receiver Output Low Voltage	V_{OL}	I_O = 4mA, V_{ID} = -200mV				0.4	V
Three-State (high impedance) Output Current at Receiver	I_{OZR}	0.4V ≤ V_O ≤ 2.4V				±1	µA
Receiver Input Resistance	R_{IN}	-7V ≤ V_{CM} ≤ 12V		96			kΩ

Note 1: All currents into device pins are positive; all currents out of device pins are negative. All voltages are referenced to device ground unless otherwise specified.

DC ELECTRICAL CHARACTERISTICS (continued)

(V_{CC} = 5V ±5%, T_A = T_{MIN} to T_{MAX}, unless otherwise noted. Typical values are at T_A = +25°C.) (Note 1)

PARAMETER	SYMBOL	CONDITIONS		MIN	TYP	MAX	UNITS
No-Load Supply Current	I_{CC}	MAX1482, RE = 0V or V_{CC}	DE = V_{CC}		25	45	µA
			DE = 0V		20	35	
		MAX1483, RE = 0V or V_{CC}	DE = V_{CC}		55	85	
			DE = 0V		20	35	
Supply Current in Shutdown	I_{SHDN}	DE = 0V, RE = V_{CC}			0.1	10	µA
Driver Short-Circuit Current	I_{OSD}	DI = high or low, -7V ≤ V_O ≤ 12V (Note 2)		35		250	mA
Receiver Short-Circuit Current	I_{OSR}	0V ≤ V_O ≤ V_{CC}		±7		±95	mA

SWITCHING CHARACTERISTICS

(V_{CC} = 5V ±5%, T_A = T_{MIN} to T_{MAX}, unless otherwise noted. Typical values are at T_A = +25°C.) (Note 1)

PARAMETER	SYMBOL	CONDITIONS	MIN	TYP	MAX	UNITS
Driver Input to Output	t_{PLH}	Figures 3 and 5, R_{DIFF} = 54Ω, C_{L1} = C_{L2} = 100pF			2	µs
	t_{PHL}				2	
Driver Output Skew to Output	t_{SKEW}	Figures 3 and 5, R_{DIFF} = 54Ω, C_{L1} = C_{L2} = 100pF			800	ns
Driver Rise or Fall Time	t_R, t_F	Figures 3 and 5, R_{DIFF} = 54Ω, C_{L1} = C_{L2} = 100pF	0.25		2	µs
Driver Enable to Output High	t_{ZH}	Figures 4 and 6, C_L = 100pF, S2 closed	0.2		2	µs
Driver Enable to Output Low	t_{ZL}	Figures 4 and 6, C_L = 100pF, S1 closed	0.1		2	µs
Driver Disable Time from Low	t_{LZ}	Figures 4 and 6, C_L = 15pF, S1 closed	0.3		3.0	µs
Driver Disable Time from High	t_{HZ}	Figures 4 and 6, C_L = 15pF, S2 closed	0.3		3.0	µs
Receiver Input to Output	t_{PLH}, t_{PHL}	Figures 3 and 7, R_{DIFF} = 54Ω, C_{L1} = C_{L2} = 100pF	0.25		2.25	µs
| t_{PLH} - t_{PHL} | Differential Receiver Skew	t_{SKD}	Figures 3 and 7, R_{DIFF} = 54Ω, C_{L1} = C_{L2} = 100pF		160		ns
Receiver Enable to Output Low	t_{ZL}	Figures 2 and 8, C_{RL} = 15pF, S1 closed			90	ns
Receiver Enable to Output High	t_{ZH}	Figures 2 and 8, C_{RL} = 15pF, S2 closed			90	ns
Receiver Disable Time from Low	t_{LZ}	Figures 2 and 8, C_{RL} = 15pF, S1 closed			90	ns
Receiver Disable Time from High	t_{HZ}	Figures 2 and 8, C_{RL} = 15pF, S2 closed			90	ns
Maximum Data Rate	f_{MAX}		250			kbps
Time to Shutdown	t_{SHDN}	(Note 3)	50	200	600	ns
Driver Enable from Shutdown to Output High	$t_{ZH(SHDN)}$	Figures 4 and 6, C_L = 100pF, S2 closed			2	µs
Driver Enable from Shutdown to Output Low	$t_{ZL(SHDN)}$	Figures 4 and 6, C_L = 100pF, S1 closed			2	µs
Receiver Enable from Shutdown to Output High	$t_{ZH(SHDN)}$	Figures 2 and 8, C_L = 15pF, S2 closed, A - B = 2V			3	µs
Receiver Enable from Shutdown to Output Low	$t_{ZL(SHDN)}$	Figures 2 and 8, C_L = 15pF, S1 closed, B - A = 2V			3	µs

Note 2: Applies to peak current. See *Typical Operating Characteristics*.

Note 3: The MAX1482/MAX1483 are put into shutdown by bringing $\overline{RE}$ high and DE low. If the inputs are in this state for less than 50ns, the parts are guaranteed not to enter shutdown. If the inputs are in this state for at least 600ns, the parts are guaranteed to have entered shutdown. See *Low-Power Shutdown Mode* section.

20µA, 1/8-Unit-Load, Slew-Rate-Limited RS-485 Transceivers

Typical Operating Characteristics

(T_A = +25°C, unless otherwise noted.)

RECEIVER PROPAGATION DELAY vs. TEMPERATURE

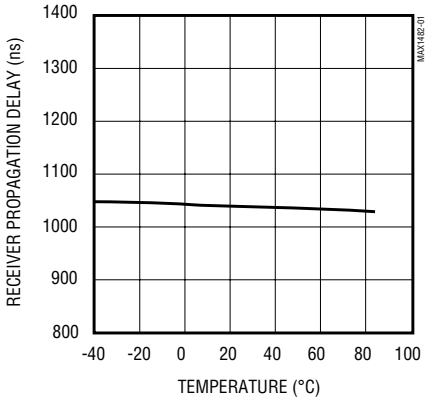

DRIVER PROPAGATION DELAY vs. TEMPERATURE

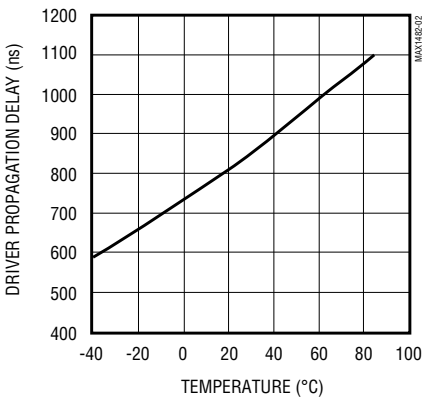

DRIVER OUTPUT CURRENT vs. DIFFERENTIAL OUTPUT VOLTAGE

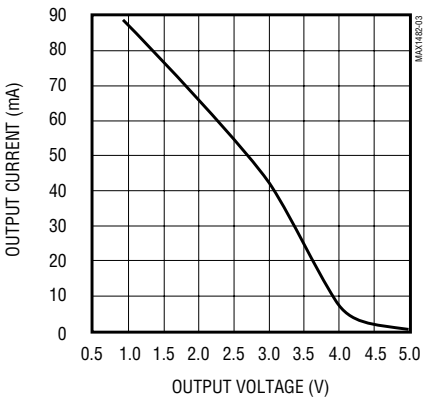

DRIVER DIFFERENTIAL OUTPUT VOLTAGE vs. TEMPERATURE

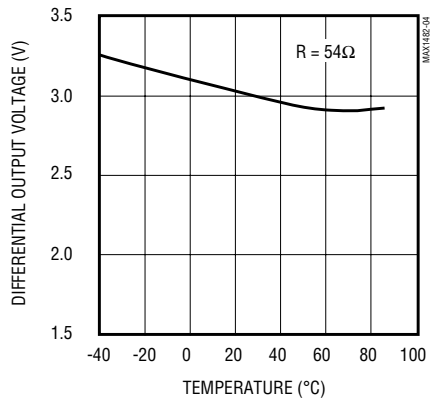

OUTPUT CURRENT vs. DRIVER OUTPUT LOW VOLTAGE

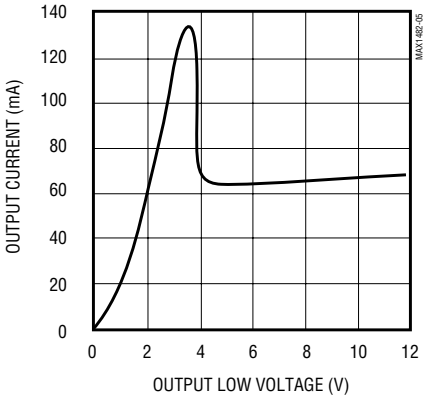

OUTPUT CURRENT vs. DRIVER OUTPUT HIGH VOLTAGE

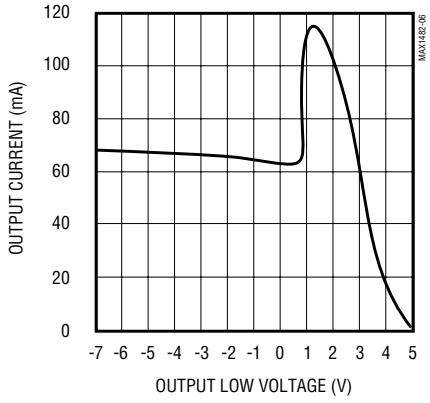

MAX1482 SUPPLY CURRENT vs. TEMPERATURE

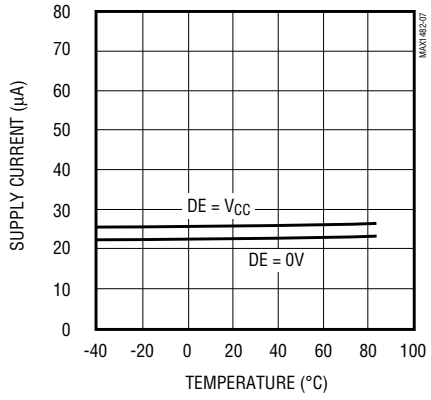

MAX1483 SUPPLY CURRENT vs. TEMPERATURE

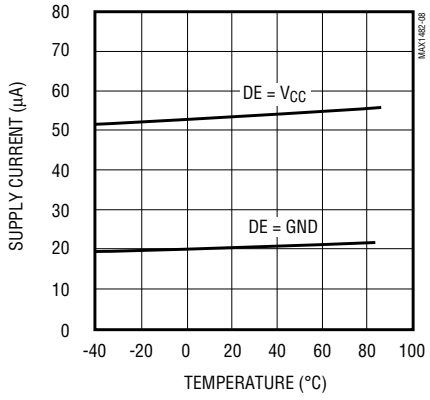

Pin Description

PIN			NAME	FUNCTION
MAX1482	MAX1483			
DIP/SO	DIP/SO	µMAX		
2	1	3	RO	Receiver Output. With the receiver output enabled (RE low), RO is high if A > B by 200mV or when A and B are not connected, and RO is low if A < B by 200mV.
3	2	4	RE	Receiver Output Enable. When RE is low, RO is enabled. When RE is high, RO is high impedance. If RE is high and DE is low, the MAX1482/MAX1483 enter a low-power (0.1µA) shutdown state.
4	3	5	DE	Driver Output Enable. The driver outputs, A and B, (Y and Z for the MAX1482) are enabled by bringing DE high. When DE is low, the driver outputs are high impedance, and the devices can function as line receivers if RE is low. If RE is high and DE is low, the parts will enter a low-power (0.1µA) shutdown state. If the driver outputs are enabled, the devices function as line drivers.
5	4	6	DI	Driver Input. With DE high, a low on DI forces output Y low and output Z high, and a high on DI forces output Y high and output Z low.
6, 7	5	7	GND	Ground
9	—	—	Y	Noninverting Driver Output
10	—	—	Z	Inverting Driver Output
—	6	8	A	Noninverting Receiver Input and Noninverting Driver Output
12	—	—	A	Noninverting Receiver Input
—	7	1	B	Inverting Receiver Input and Inverting Driver Output
11	—	—	B	Inverting Receiver Input
14	8	2	V_{CC}	Positive Supply: 4.75V to 5.25V
1, 8, 13	—	—	N.C.	No Connect—not internally connected

20µA, 1/8-Unit-Load, Slew-Rate-Limited RS-485 Transceivers

Test Circuits

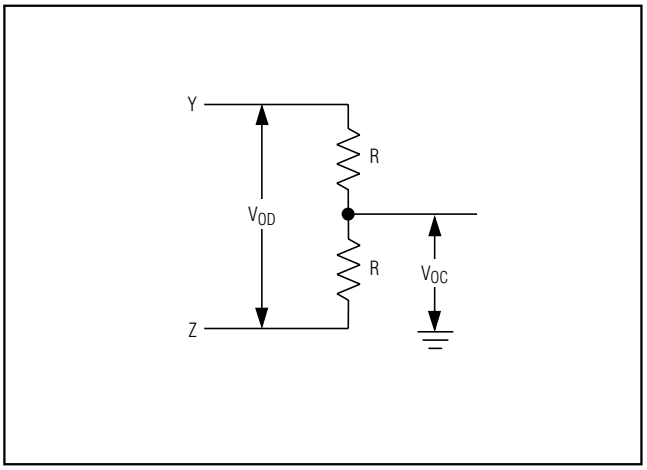

Figure 1. Driver DC Test Load

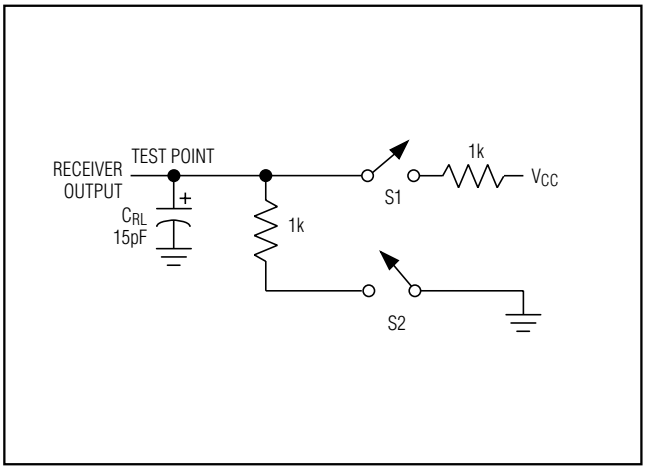

Figure 2. Receiver Timing Test Load

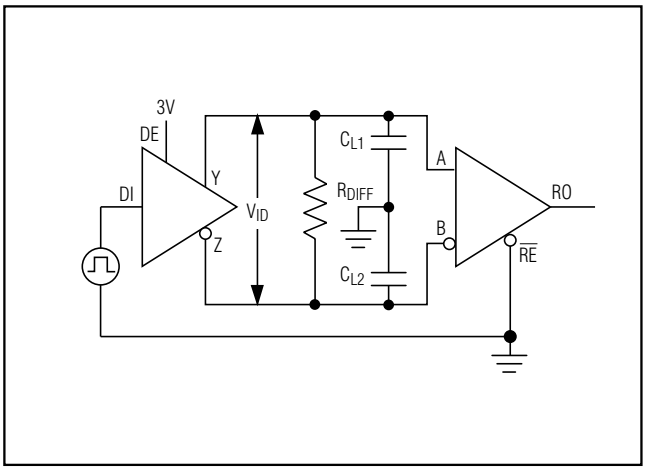

Figure 3. Driver/Receiver Timing Test Circuit

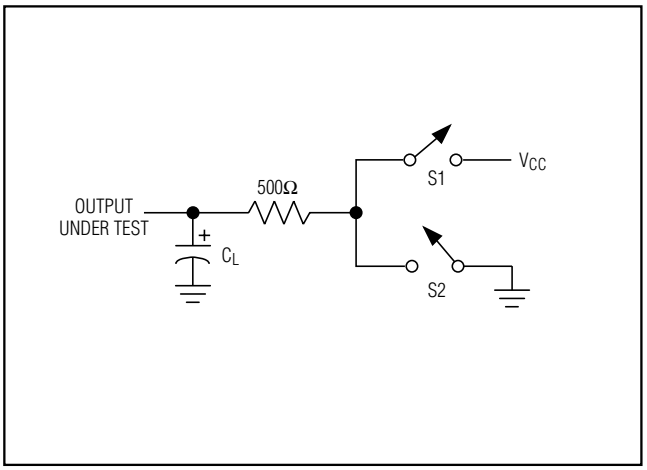

Figure 4. Driver Timing Test Load

Switching Waveforms

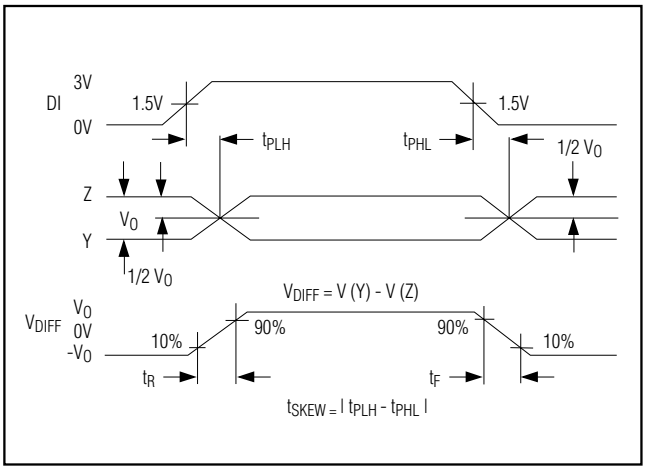

Figure 5. Driver Propagation Delays

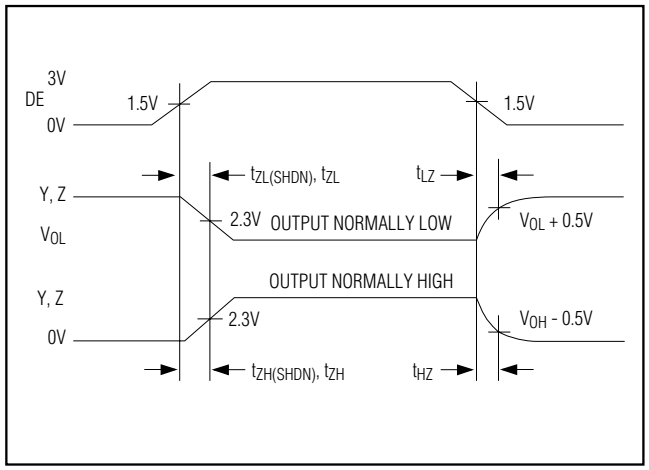

Figure 6. Driver Enable and Disable Times

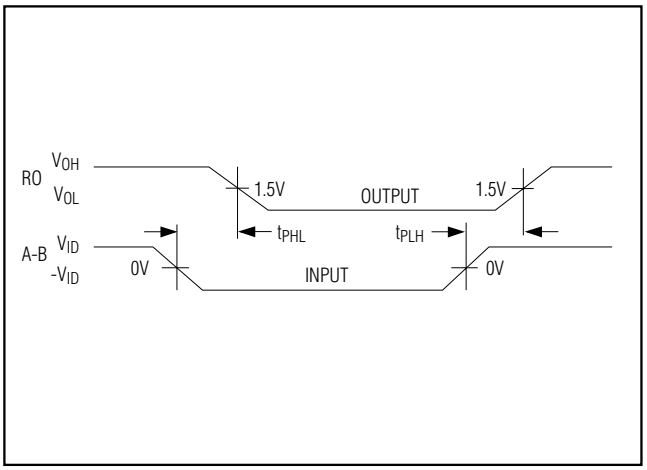

Figure 7. Receiver Propagation Delays

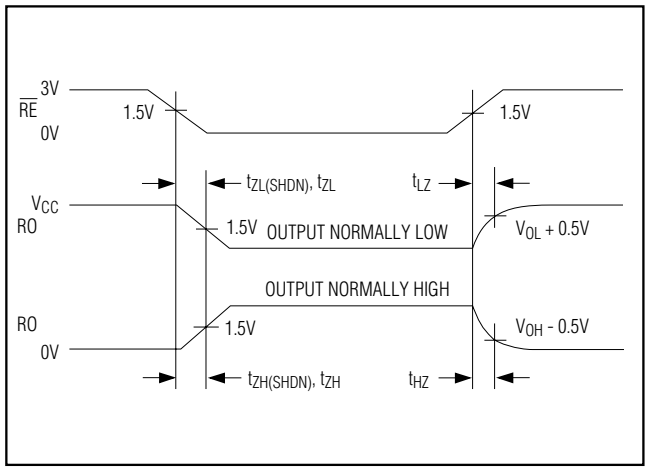

Figure 8. Receiver Enable and Disable Times

20µA, 1/8-Unit-Load, Slew-Rate-Limited RS-485 Transceivers

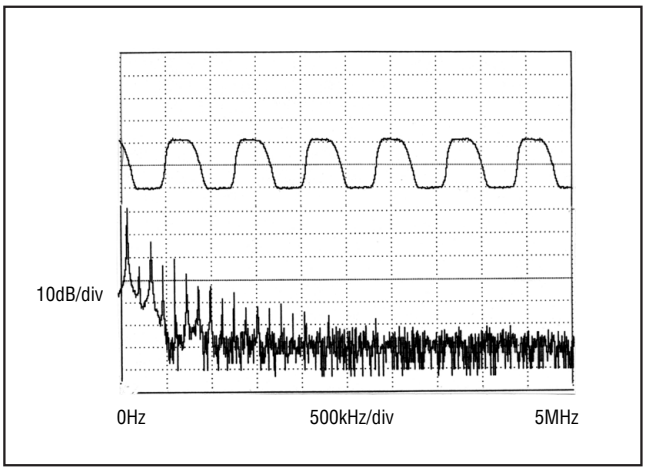

Figure 9. Driver Output Waveform and FFT, Transmitting 250kbps (125kHz) Signal

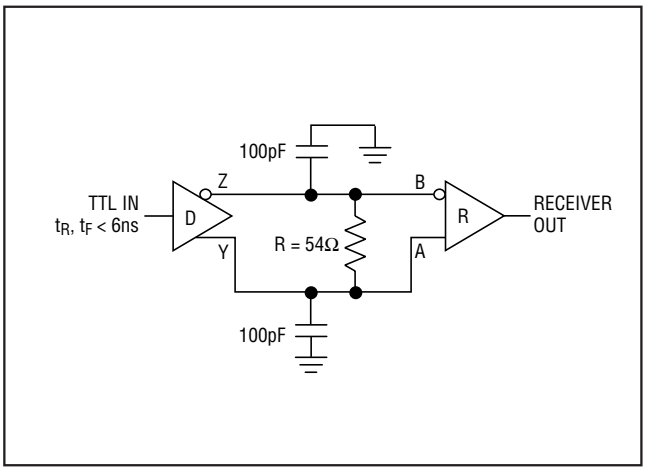

Figure 10. Receiver Propagation-Delay Test Circuit

Table 1. Transmitting

INPUTS			OUTPUTS	
$\overline{RE}$	DE	DI	Z	Y
X	1	1	0	1
X	1	0	1	0
X	0	X	High-Z	High-Z

X = Don't Care
High-Z = High Impedance

Table 2. Receiving

INPUTS			OUTPUT
$\overline{RE}$	DE*	A-B	RO
0	0	≥ +0.2V	1
0	0	≤ -0.2V	0
0	0	Inputs open	1
1	0	X	High-Z

X = Don't Care
High-Z = High Impedance
* DE = 0 for MAX1483 and is a Don't Care for MAX1482.

Applications Information

The MAX1482/MAX1483 are low-power transceivers for RS-485 and RS-422 communications. The MAX1482 and MAX1483 are specified for data rates of at least 250kbps. The MAX1482 is a full-duplex transceiver while the MAX1483 is half duplex. When disabled, the driver and receiver outputs are high impedance.

The 96kΩ, 1/8-unit-load receiver input impedance of the MAX1482/MAX1483 allows up to 256 transceivers on a bus, compared to the 1-unit load (12kΩ input impedance) of standard RS-485 drivers (32 transceivers maximum). Any combination of MAX1482/MAX1483 and other RS-485 transceivers with a total of 32 unit loads or less can be put on the bus.

Reduced EMI and Reflections

The MAX1482/MAX1483 are slew-rate limited, minimizing EMI and reducing reflections caused by improperly terminated cables. Figure 9 shows both the driver output waveform of a MAX1482/MAX1483 transmitting a 125kHz signal and the Fourier analysis of that signal.

High-frequency harmonics have much lower amplitudes, and the potential for EMI is significantly reduced.

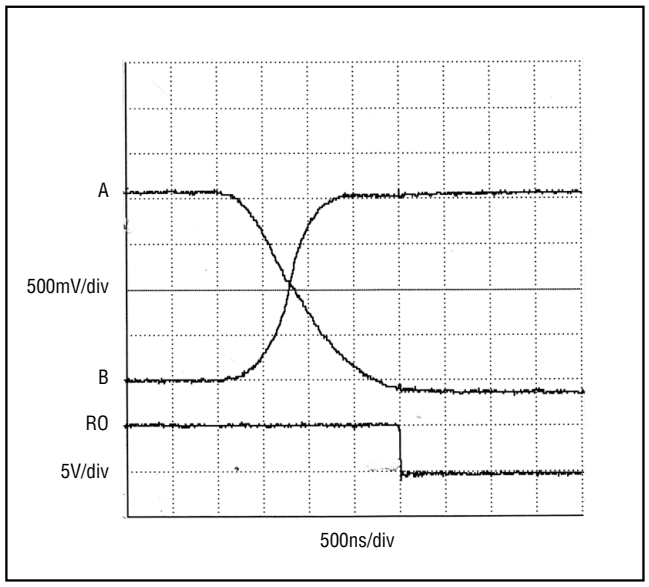

Figure 11. Receiver t_{PHL}

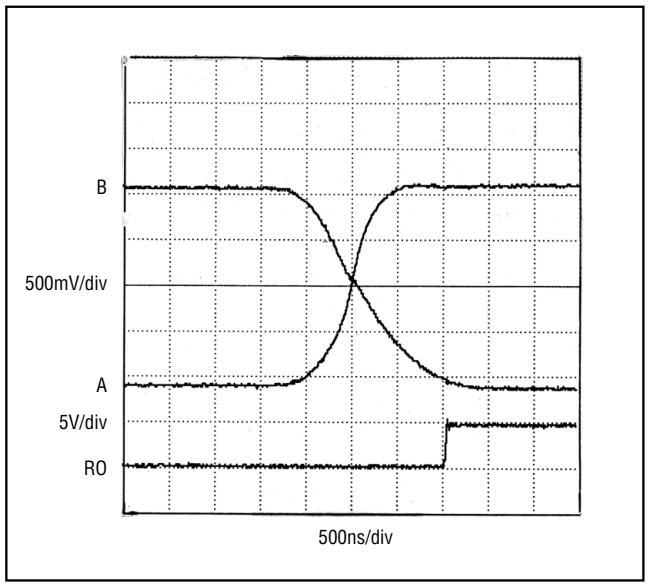

Figure 12. Receiver t_{PLH}

Low-Power Shutdown Mode

A low-power shutdown mode is initiated by bringing RE high and DE low. The devices will not shut down unless **both** the driver and receiver are disabled. In shutdown, the devices typically draw only 0.1µA of supply current.

RE and DE may be driven simultaneously; the parts are guaranteed not to enter shutdown if RE is high and DE is low for less than 50ns. If the inputs are in this state for at least 600ns, the parts are guaranteed to enter shutdown.

For the receiver, the t_{ZH} and t_{ZL} enable times assume the part was not in the low-power shutdown state. The $t_{ZH(SHDN)}$ and $t_{ZL(SHDN)}$ enable times assume the parts were shut down (see *Electrical Characteristics*).

It takes the receivers longer to become enabled from the low-power shutdown state ($t_{ZH(SHDN)}$, $t_{ZL(SHDN)}$) than from the operating mode (t_{ZH}, t_{ZL}). (The parts are in operating mode if the RE , DE inputs equal a logical 0,1 or 1,1 or 0,0.)

Driver Output Protection

Excessive output current and power dissipation caused by faults or by bus contention are prevented by two mechanisms. A foldback current limit on the output stage provides immediate protection against short circuits over the whole common-mode voltage range (see *Typical Operating Characteristics*). In addition, a thermal shutdown circuit forces the driver outputs into a high-impedance state if the die temperature rises excessively.

Propagation Delay

Digital encoding schemes depend on the driver and receiver skew. Skew is defined as the difference between the rising and falling propagation delay times. Typical propagation delays are shown in Figures 11 and 12 using Figure 10's test circuit.

The difference in receiver delay times, $|t_{PLH} - t_{PHL}|$, is typically under 160ns.

The driver skew times are typically 160ns (800ns max).

20µA, 1/8-Unit-Load, Slew-Rate-Limited RS-485 Transceivers

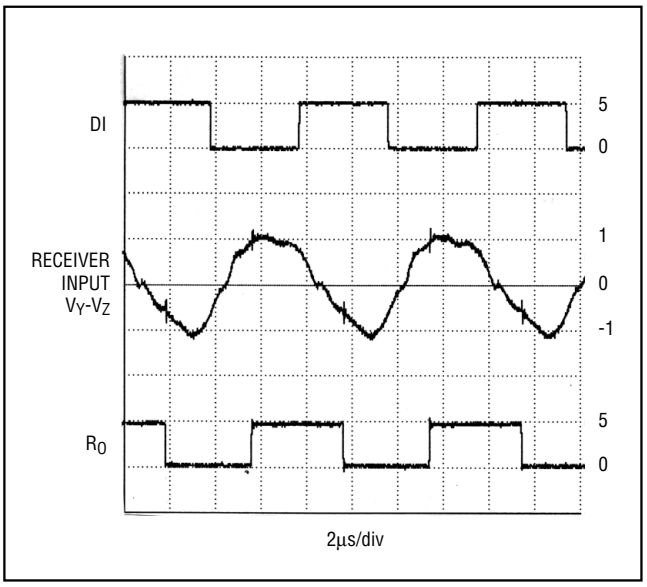

Figure 13. System Differential Voltage at 250kbps (125kHz) Driving 4000 Feet of Cable

Line Length vs. Data Rate

The RS-485/RS-422 standard covers line lengths up to 4000 feet. For line lengths greater than 4000 feet, see Figure 16.

Figure 13 shows the system differential voltage for the parts driving 4000 feet of 26AWG twisted-pair wire at 110kHz into 120Ω loads. Even after 4000 feet of cable, the MAX1482/MAX1483 output shows virtually no distortion.

Typical Applications

The MAX1482/MAX1483 transceivers are designed for bidirectional data communications on multipoint bus transmission lines. Figures 14 and 15 show typical network applications circuits. These parts can also be used as line repeaters, with cable lengths longer than 4000 feet, as shown in Figure 16.

To minimize reflections, the line should be terminated at both ends in its characteristic impedance, and stub lengths off the main line should be kept as short as possible (although the slew-rate-limited MAX1482 and MAX1483 are more tolerant of imperfect termination than standard RS-485 ICs).

Isolated RS-485

For isolated RS-485 applications, see the MAX253 and MAX1480 data sheets.

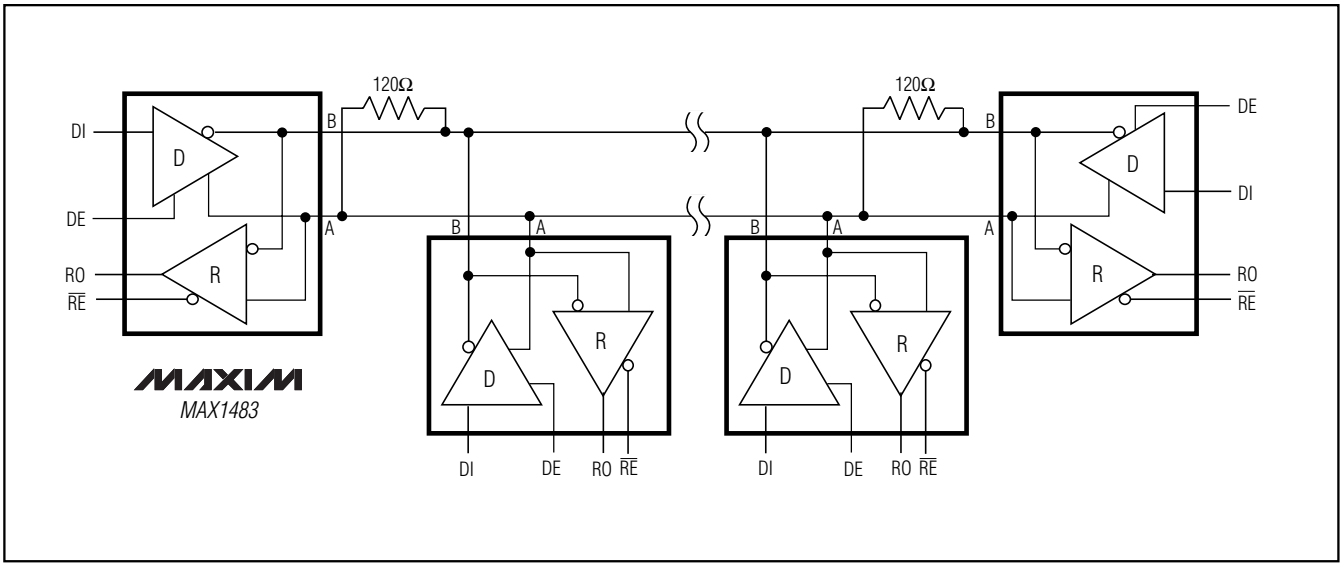

Figure 14. MAX1483 Typical Half-Duplex RS-485 Network

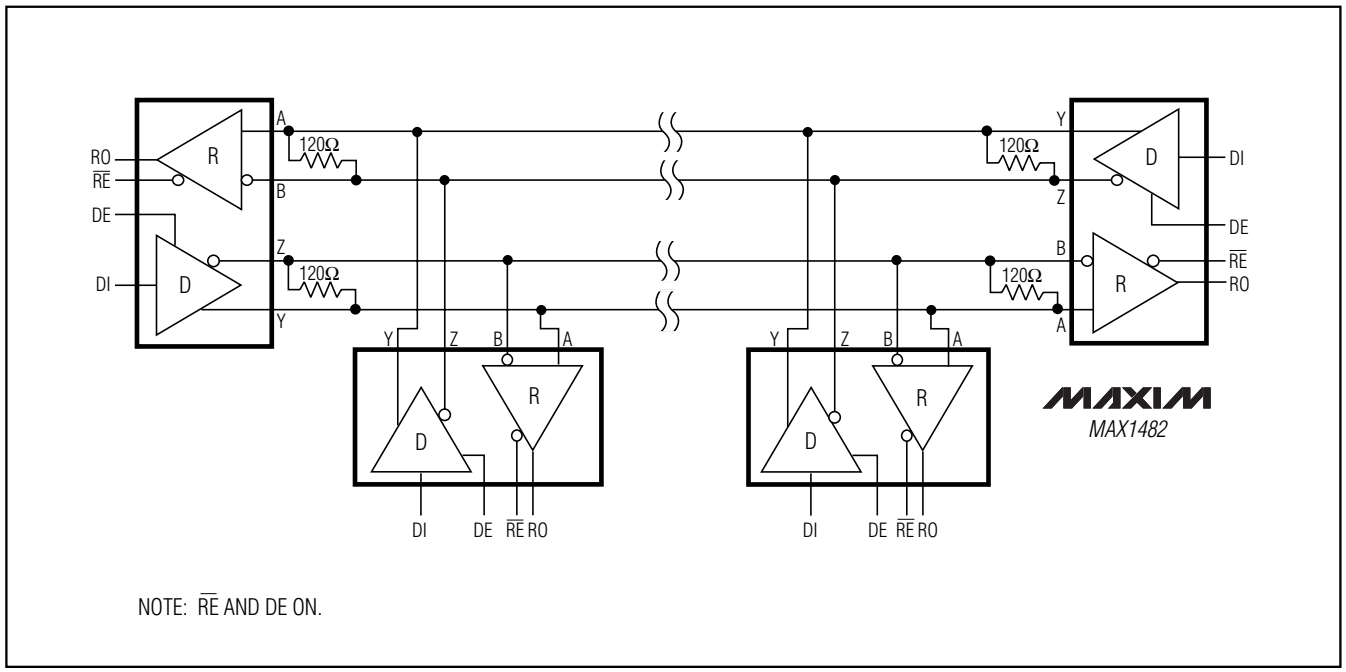

Figure 15. MAX1482 Full-Duplex RS-485 Network

Typical Operating Circuits (continued)

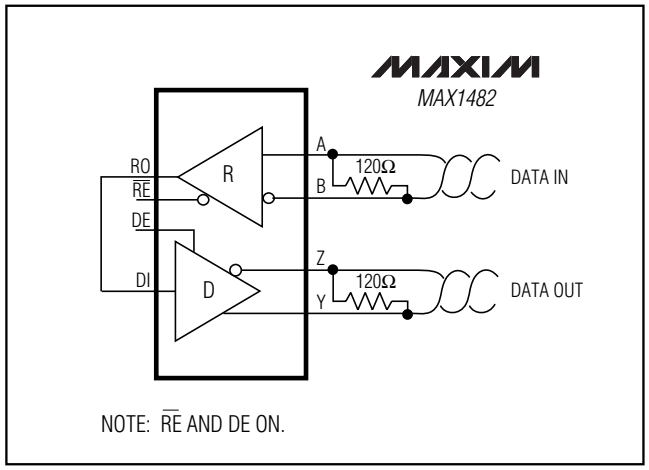

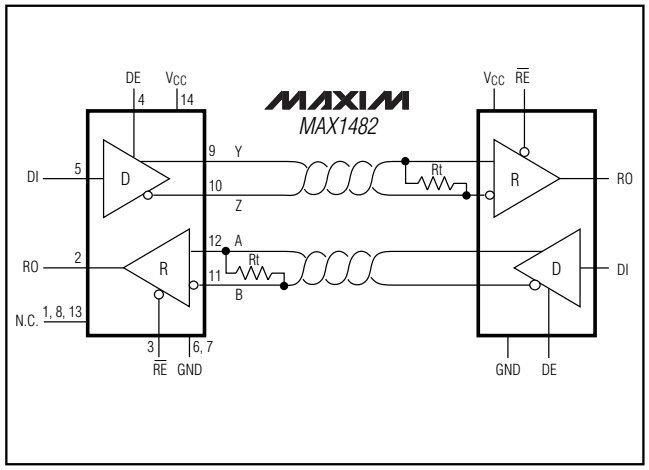

Figure 16. Line Repeater for MAX1482

20µA, 1/8-Unit-Load, Slew-Rate-Limited RS-485 Transceivers

Pin Configurations (continued)

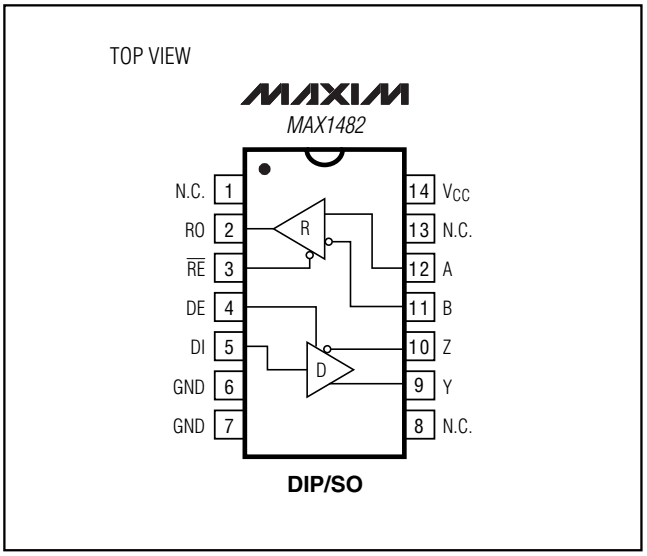

DIP/SO

Chip Information

TRANSISTOR COUNT: 294

Package Information

(The package drawing(s) in this data sheet may not reflect the most current specifications. For the latest package outline information, go to **www.maxim-ic.com/packages**.)

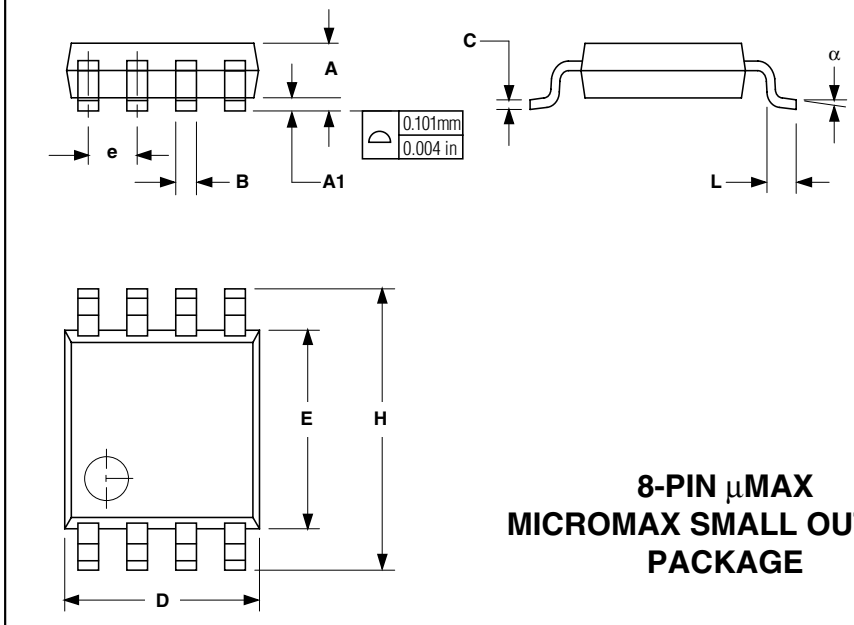

DIM	INCHES		MILLIMETERS	
	MIN	MAX	MIN	MAX
A	0.036	0.044	0.91	1.11
A1	0.004	0.008	0.10	0.20
B	0.010	0.014	0.25	0.36
C	0.005	0.007	0.13	0.18
D	0.116	0.120	2.95	3.05
E	0.116	0.120	2.95	3.05
e	0.0256		0.65	
H	0.188	0.198	4.78	5.03
L	0.016	0.026	0.41	0.66
α	0°	6°	0°	6°

8-PIN µMAX
MICROMAX SMALL OUTLINE
PACKAGE

Package Information (continued)

(The package drawing(s) in this data sheet may not reflect the most current specifications. For the latest package outline information, go to **www.maxim-ic.com/packages**.)

SOICN .EPS

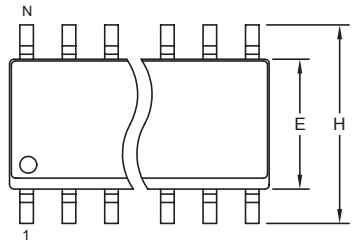

TOP VIEW

	INCHES		MILLIMETERS	
DIM	MIN	MAX	MIN	MAX
A	0.053	0.069	1.35	1.75
A1	0.004	0.010	0.10	0.25
B	0.014	0.019	0.35	0.49
C	0.007	0.010	0.19	0.25
e	0.050 BSC		1.27 BSC	
E	0.150	0.157	3.80	4.00
H	0.228	0.244	5.80	6.20
L	0.016	0.050	0.40	1.27

VARIATIONS:

	INCHES		MILLIMETERS			
DIM	MIN	MAX	MIN	MAX	N	MS012
D	0.189	0.197	4.80	5.00	8	AA
D	0.337	0.344	8.55	8.75	14	AB
D	0.386	0.394	9.80	10.00	16	AC

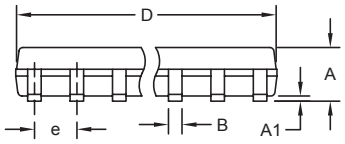

FRONT VIEW

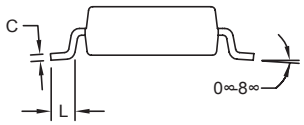

SIDE VIEW

NOTES:
1. D&E DO NOT INCLUDE MOLD FLASH.
2. MOLD FLASH OR PROTRUSIONS NOT TO EXCEED 0.15mm (.006").
3. LEADS TO BE COPLANAR WITHIN 0.10mm (.004").
4. CONTROLLING DIMENSION: MILLIMETERS.
5. MEETS JEDEC MS012.
6. N = NUMBER OF PINS.

DALLAS SEMICONDUCTOR MAXIM

PROPRIETARY INFORMATION

TITLE: PACKAGE OUTLINE, .150" SOIC

APPROVAL	DOCUMENT CONTROL NO.	REV.	
	21-0041	B	1/1

20µA, 1/8-Unit-Load, Slew-Rate-Limited RS-485 Transceivers

Package Information (continued)

(The package drawing(s) in this data sheet may not reflect the most current specifications. For the latest package outline information, go to **www.maxim-ic.com/packages**.)

PDIPN.EPS

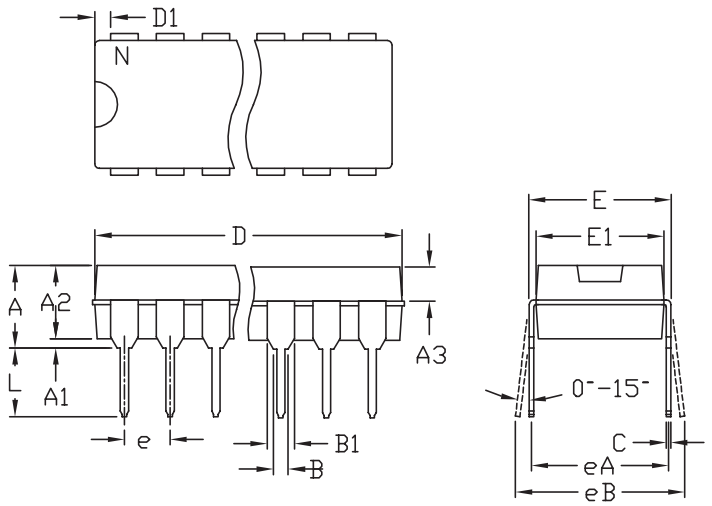

	INCHES		MILLIMETERS	
	MIN	MAX	MIN	MAX
A	---	0.180	---	4.572
A1	0.015	---	0.38	---
A2	0.125	0.175	3.18	4.45
A3	0.055	0.080	1.40	2.03
B	0.015	0.022	0.381	0.56
B1	0.045	0.065	1.14	1.65
C	0.008	0.014	0.2	0.355
D1	0.005	0.080	0.13	2.03
E	0.300	0.325	7.62	8.26
E1	0.240	0.310	6.10	7.87
e	0.100 BSC.		2.54 BSC.	
eA	0.300 BSC.		7.62 BSC.	
eB	0.400 BSC.		10.16 BSC.	
L	0.115	0.150	2.921	3.81

	INCHES		MILLIMETERS			
	MIN	MAX	MIN	MAX	N	MS001
D	0.348	0.390	8.84	9.91	8	AB
D	0.735	0.765	18.67	19.43	14	AC
D	0.745	0.765	18.92	19.43	16	AA
D	0.885	0.915	22.48	23.24	18	AD
D	1.015	1.045	25.78	26.54	20	AE
D	1.14	1.265	28.96	32.13	24	AF
D	1.360	1.380	34.54	35.05	28	*5

NOTES:
1. D&E DO NOT INCLUDE MOLD FLASH
2. MOLD FLASH OR PROTRUSIONS NOT TO EXCEED .15mm (.006")
3. CONTROLLING DIMENSION: MILLIMETER
4. MEETS JEDEC MS001-XX AS SHOWN IN ABOVE TABLE
5. SIMILIAR TO JEDEC MO-058AB
6. N = NUMBER OF PINS

MAXIM 120 SAN GABRIEL DR SUNNYVALE CA 94086 FAX (408) 737 7194 PROPRIETARY INFORMATION

PACKAGE FAMILY OUTLINE: PDIP .300" (TITLE)

1/1

21-0043 D (DOCUMENT CONTROL NUMBER REV.)

Maxim cannot assume responsibility for use of any circuitry other than circuitry entirely embodied in a Maxim product. No circuit patent licenses are implied. Maxim reserves the right to change the circuitry and specifications without notice at any time.

© 2006 Maxim Integrated Products MAXIM is a registered trademark of Maxim Integrated Products, Inc.