19-2662; Rev 0; 10/02

MAXIM

High-Efficiency, Triple-Output, Keep-Alive Power Supply for Notebook Computers

General Description

The MAX1534 is a high-efficiency, triple-output power supply for keep-alive (always on) voltage rails. The 500mA buck regulator with an internal current-limited 0.5Ω PMOS steps down the battery or wall adapter supply rail to a fixed 5V or an adjustable output voltage. Two integrated low-voltage linear regulators follow this output and provide two independent preset output voltages of 3.3V and 1.8V, or adjustable output voltages.

The buck regulator utilizes a peak current-limit, pulse-frequency modulation (PFM) architecture for highest light-load efficiency to conserve battery life. High switching frequencies (up to 200kHz) allow the use of tiny surface-mount inductors and output capacitors. Operation to 100% duty cycle minimizes dropout voltage (250mV at 500mA).

The low-dropout linear regulators use an internal P-channel metal-oxide (PMOS) pass transistor to minimize supply current and deliver up to 160mA each of continuous current.

The MAX1534 includes a power-OK (POK) signal that indicates all outputs are in regulation. The 4% accurate threshold of the $\overline{SHDN}$ input permits its use as a low-battery detector.

The MAX1534 is available in a small 16-pin thin QFN (4mm × 4mm) package, occupying 33% less board space than discrete solutions.

Applications

Notebook and Sub-Notebook Computers

Wake-On LAN

2 to 4 Li+ Cells Battery-Powered Devices

Hand-Held Devices

Keep-Alive Supplies

Standby Supplies

Features

- **One Switching and Two Linear Regulators**
- **Switching Regulator**
  - **+4.5V to +24V Input Voltage Range**
  - **Over 95% Efficiency**
  - **Up to 500mA Output Current**
  - **Up to 200kHz Switching Frequency**
  - **Fixed 5V or Adjustable Output Voltage**
  - **Internal 0.5Ω PMOS Switch**
  - **100% Maximum Duty Cycle for Low-Dropout Operation**
- **Two Low-Dropout Linear Regulators**
  - **Up to 160mA Output Current (Each)**
  - **3.3V/Adj Output Voltage for OUT1**
  - **1.8V/Adj Output Voltage for OUT2**
- **±1.5% Accurate Output Voltage**
- **±4% Accurate Shutdown for Low Battery Detection**
- **Thermal Shutdown Protection**
- **POK Output**
- **1mW Typical Standby Power**

Ordering Information

PART	TEMP RANGE	PIN-PACKAGE
MAX1534ETE	-40°C to +85°C	16 Thin QFN (4mm × 4mm)

Pin Configuration appears at end of data sheet.

Typical Operating Circuit

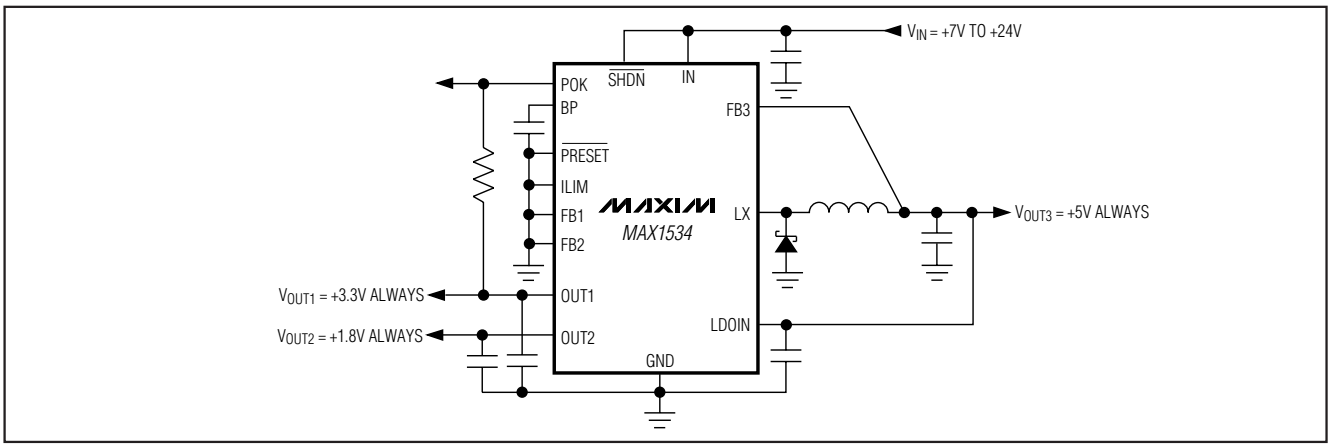

For pricing, delivery, and ordering information, please contact Maxim/Dallas Direct! at 1-888-629-4642, or visit Maxim's website at www.maxim-ic.com.

High-Efficiency, Triple-Output, Keep-Alive Power Supply for Notebook Computers

ABSOLUTE MAXIMUM RATINGS

IN, ILIM, $\overline{PRESET}$, $\overline{SHDN}$ to GND .....-0.3V to +25V
FB1, FB2, FB3, LDOIN, BP to GND .....-0.3V to +6V
OUT1, OUT2, POK to GND .....-0.3V to (V_{LDOIN} + 0.3V)
LX to GND .....-2V to (V_{IN} + 0.3V)
OUT1, OUT2 Short Circuit to GND .....Continuous
Peak IN Current 2A
Maximum IN DC Current 500mA

Continuous Power Dissipation (T_A = +70°C)
16-Pin Thin QFN (derate 16.9mW/°C above +70°C) 1349mW
Operating Temperature Range .....-40°C to +85°C
Junction Temperature .....+150°C
Storage Temperature Range .....-65°C to +150°C
Lead Temperature (soldering, 10s) .....+300°C

Stresses beyond those listed under "Absolute Maximum Ratings" may cause permanent damage to the device. These are stress ratings only, and functional operation of the device at these or any other conditions beyond those indicated in the operational sections of the specifications is not implied. Exposure to absolute maximum rating conditions for extended periods may affect device reliability.

ELECTRICAL CHARACTERISTICS

(Circuit of Figure 1, V_{IN} = 12V, ILIM = GND, $\overline{PRESET}$ = GND, **T_A = 0°C to +85°C**, unless otherwise noted. Typical values are at T_A = +25°C.)

PARAMETER	SYMBOL	CONDITIONS		MIN	TYP	MAX	UNITS
Input Voltage Range	V_{IN}			4.5		24	V
Input Supply Current	I_{IN}	No load, FB3 = 5.2V, LDOIN = GND			15	30	µA
Input Supply Current in Dropout	$I_{IN(DROP)}$	No load, FB3 = V_{IN} = 4.5V, LDOIN = GND			60	110	µA
Shutdown Supply Current		$\overline{SHDN}$ = GND			3.5	7	µA
Input UVLO Threshold	V_{UVLO}	V_{IN} rising		3.6	4.0	4.4	V
		V_{IN} falling		3.5	3.9	4.3	
BUCK REGULATOR							
FB3 Voltage Accuracy (Preset Mode) (Note 1)		$\overline{PRESET}$ = GND	T_A = +25°C to +85°C	4.92	5.00	5.08	V
			T_A = 0°C to +85°C	4.90	5.00	5.10	
FB3 Set Voltage (Adjustable Mode) (Note 1)	V_{FB3}	$\overline{PRESET}$ = IN	T_A = +25°C to +85°C	0.985	1.00	1.015	V
			T_A = 0°C to +85°C	0.98	1.00	1.02	
FB3 Bias Current	I_{FB3}	V_{FB3} = 5.5V			3.5	6.25	µA
LX Switch Minimum Off-Time	$t_{OFF(MIN)}$			0.22	0.42	0.62	µs
LX Switch Minimum On-Time	$t_{ON(MIN)}$				0.50		µs
LX Switch Maximum On-Time	$t_{ON(MAX)}$			9	10	11	µs
LX Switch On-Resistance	R_{LX}	V_{IN} = 6V			0.5	1.0	Ω
		V_{IN} = 4.5V			0.6	1.2	
LX Current Limit	$I_{LX(PEAK)}$	ILIM = IN		800	1000	1200	mA
		ILIM = GND		425	500	575	
LX Zero-Crossing Threshold				-75		+75	mV
LX Zero-Crossing Timeout		LX does not rise above threshold			30		µs
LX Switch Leakage Current		V_{IN} = 24V, not switching	T_A = +25°C			1	µA
			T_A = 0°C to +85°C			10	
Dropout Voltage	$V_{OUT3(DROPOUT)}$	$I_{LX(DC)}$ = 500mA			250		mV
Line Regulation		V_{IN} = 8V to 24V, $I_{LX(DC)}$ = 200mA			0.1		%/V
Load Regulation		$I_{LX(DC)}$ = 80mA to 400mA			0.9		%
LINEAR REGULATORS							
LDOIN Input Voltage	V_{LDOIN}			2.5		5.5	V
LDOIN Undervoltage Lockout	$V_{UVLO(LDO)}$	V_{LDOIN} rising, hysteresis = 40mV typ		2.15		2.4	V

ELECTRICAL CHARACTERISTICS (continued)

(Circuit of Figure 1, V_{IN} = 12V, ILIM = GND, $\overline{PRESET}$ = GND, **T_A = 0°C to +85°C**, unless otherwise noted. Typical values are at T_A = +25°C.)

PARAMETER	SYMBOL	CONDITIONS		MIN	TYP	MAX	UNITS
OUT1 Voltage Accuracy (Preset Mode)	V_{OUT1}	$\overline{PRESET}$ = GND	I_{OUT1} = 100µA to 160mA	3.20	3.30	3.37	V
OUT2 Voltage Accuracy (Preset Mode)	V_{OUT2}	$\overline{PRESET}$ = GND	I_{OUT2} = 100µA to 160mA	1.74	1.80	1.84	V
FB1, FB2 Set Voltage (Adjustable Mode)	V_{FB1}, V_{FB2}	$\overline{PRESET}$ = IN	$I_{OUT_}$ = 100µA to 160mA	0.97	1.00	1.02	V
FB1, FB2 Bias Current		$\overline{PRESET}$ = IN, V_{FB1} = V_{FB2} = 1.1V		-25		+25	nA
OUT1, OUT2 Adjustable Output Voltage Range	V_{OUT1}, V_{OUT2}	$\overline{PRESET}$ = IN		1.0		V_{LDOIN}	V
Maximum OUT1 Output Current	$I_{OUT1(MAX)}$	Continuous		160			mA
OUT1 Current Limit				160		550	mA
Maximum OUT2 Output Current	$I_{OUT2(MAX)}$	Continuous		160			mA
OUT2 Current Limit				160		550	mA
LDOIN Current		I_{OUT1} = I_{OUT2} = 0, V_{LDOIN} = 5.5V			165	265	µA
LDO_ Dropout Voltage		$I_{OUT_}$ = 80mA (Note 2)			120	240	mV
LDO_ Line Regulation		V_{LDOIN} = ($V_{OUT_}$ + 0.4V) or +2.5V to +5.5V, $I_{OUT_}$ = 1mA		-0.2	0	+0.2	%/V
FAULT DETECTION							
POK Threshold		OUT1, OUT2, and FB3 rising edge, 1% hysteresis (Note 3)		-13	-11	-9	%
POK Propagation Delay		Falling edge, 50mV overdrive			10		µs
POK Output Low Voltage		I_{SINK} = 1mA				0.4	V
POK Leakage Current		High state, forced to 5.5V				1	µA
Thermal Shutdown Threshold		Typical hysteresis = 15°C			+160		°C
INPUTS AND OUTPUTS							
$\overline{SHDN}$ Input Trip Level		Rising trip level, 100mV hysteresis		0.96	1.0	1.04	V
Input Leakage Current		$V_{\overline{SHDN}}$, $V_{\overline{PRESET}}$, V_{ILIM} = 0 or 24V		-1		+1	µA
$\overline{PRESET}$, ILIM Logic Levels		Low				0.5	V
		High		2.2			V

High-Efficiency, Triple-Output, Keep-Alive Power Supply for Notebook Computers

ELECTRICAL CHARACTERISTICS

(Circuit of Figure 1, V_{IN} = 12V, ILIM = GND, $\overline{PRESET}$ = GND, **T_A = -40°C to +85°C**, unless otherwise noted.) (Note 4)

PARAMETER	SYMBOL	CONDITIONS		MIN	TYP	MAX	UNITS
Input Voltage Range	V_{IN}	V_{IN}		4.5		24	V
Input Undervoltage Lockout Threshold	V_{UVLO}	V_{IN} rising		3.6		4.4	V
		V_{IN} falling		3.5		4.3	
BUCK REGULATOR							
FB3 Voltage Accuracy (Preset Mode)		$\overline{PRESET}$ = GND		4.85		5.15	V
FB3 Set Voltage (Adjustable Mode)	V_{FB3}	$\overline{PRESET}$ = IN		0.97		1.03	V
LX Switch Minimum Off-Time	$t_{OFF(MIN)}$			0.22		0.62	µs
LX Switch Maximum On-Time	$t_{ON(MAX)}$			8		12	µs
LX Switch On-Resistance	R_{LX}	V_{IN} = 6V				1.0	Ω
		V_{IN} = 4.5V				1.2	
LX Current Limit	$I_{LX(PEAK)}$	ILIM = IN		800		1200	mA
		ILIM = GND		425		575	
LINEAR REGULATORS							
LDOIN Input Voltage	V_{LDOIN}			2.5		5.5	V
LDOIN UVLO	$V_{UVLO(LDO)}$	V_{LDOIN} rising, hysteresis = 40mV (typ)		2.15		2.40	V
OUT1 Voltage Accuracy (Preset Mode)	V_{OUT1}	$\overline{PRESET}$ = GND	I_{OUT1} = 100µA to 160mA	3.20		3.40	V
OUT2 Voltage Accuracy (Preset Mode)	V_{OUT2}	$\overline{PRESET}$ = GND	I_{OUT2} = 100µA to 160mA	1.74		1.86	V
FB1, FB2 Set Voltage (Adjustable Mode)	V_{FB1}, V_{FB2}	$\overline{PRESET}$ = IN	$I_{OUT_}$ = 100µA to 160mA	0.97		1.03	V
OUT1, OUT2 Adjustable Output Voltage Range	V_{OUT1}, V_{OUT2}	$\overline{PRESET}$ = IN		1.0		V_{LDOIN}	V
Maximum OUT1 Output Current	$I_{OUT1(MAX)}$	Continuous		160			mA
OUT1 Current Limit				160		550	mA
Maximum OUT2 Output Current	$I_{OUT2(MAX)}$	Continuous		160			mA
OUT2 Current Limit				160		550	mA
LDO_ Dropout Voltage		$I_{OUT_}$ = 80mA (Note 2)				250	mV
LDO_ Line Regulation		V_{LDOIN} = ($V_{OUT_}$ + 0.4V) or +2.5V to +5.5V, $I_{OUT_}$ = 1mA		-0.2		+0.2	%/V
FAULT DETECTION							
POK Threshold		OUT1, OUT2, and FB3 rising edge, 1% hysteresis (Note 3)		-13		-8	%

ELECTRICAL CHARACTERISTICS (continued)

(Circuit of Figure 1, V_{IN} = 12V, ILIM = GND, $\overline{PRESET}$ = GND, **T_A = -40°C to +85°C**, unless otherwise noted.) (Note 4)

PARAMETER	SYMBOL	CONDITIONS	MIN	TYP	MAX	UNITS
INPUTS AND OUTPUTS						
$\overline{SHDN}$ Input Trip Level		Rising trip level, 100mV hysteresis	0.96		1.04	V
$\overline{PRESET}$, ILIM Logic Levels		Low			0.5	V
		High	2.2			V

Note 1: The output voltage at light loads has a DC regulation level higher than the error comparator threshold by half the ripple voltage.

Note 2: The dropout voltage is defined as V_{LDOIN} - $V_{OUT_}$ when V_{LDOIN} = $V_{OUT_(NOM)}$. Specification only applies when $V_{OUT_}$ ≥ 2.5V.

Note 3: OUT1, OUT2 DC set point, FB3 set point at the DC trip threshold of buck regulator.

Note 4: Specifications to -40°C are guaranteed by design, not production tested.

Typical Operating Characteristics

(Circuit of Figure 1, V_{IN} = +12V, $\overline{PRESET}$ = GND, T_A = +25°C, unless otherwise noted.)

BUCK OUTPUT VOLTAGE vs. LOAD CURRENT, CIRCUIT 1

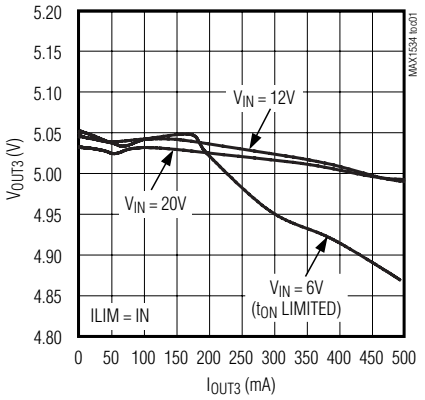

BUCK EFFICIENCY vs. LOAD CURRENT, CIRCUIT 1

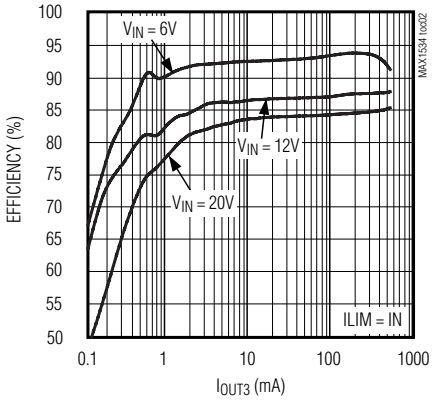

BUCK EFFICIENCY vs. LOAD CURRENT, CIRCUIT 2

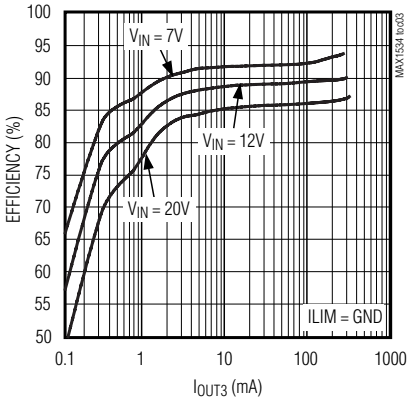

BUCK EFFICIENCY vs. LOAD CURRENT CIRCUIT 1, V_{IN} = 12V

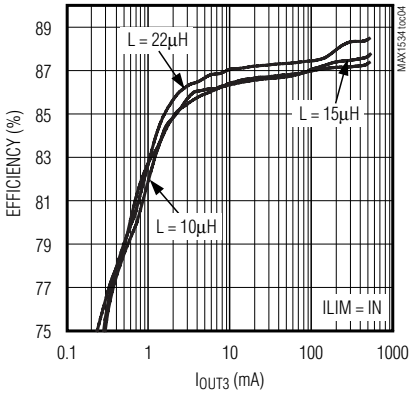

SWITCHING FREQUENCY vs. V_{IN}, CIRCUIT 1, ILIM = IN

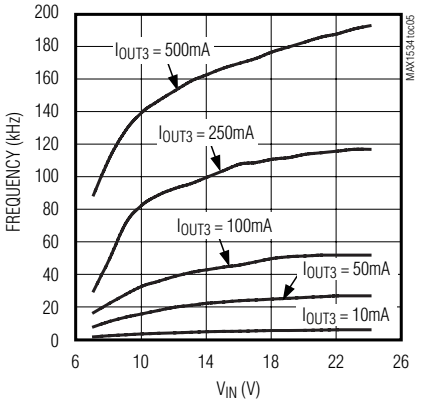

High-Efficiency, Triple-Output, Keep-Alive Power Supply for Notebook Computers

Typical Operating Characteristics (continued)

(Circuit of Figure 1, V_{IN} = +12V, $\overline{PRESET}$ = GND, T_A = +25°C, unless otherwise noted.)

SWITCHING FREQUENCY vs. LOAD CURRENT, CIRCUIT 1, ILIM = IN

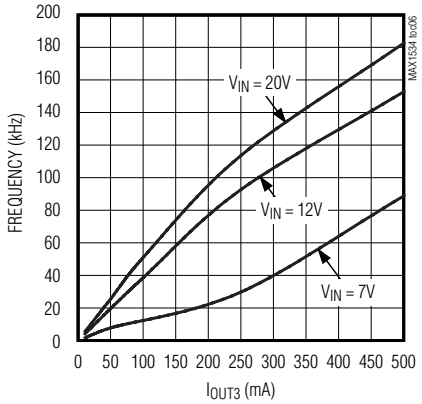

NO-LOAD SUPPLY CURRENT vs. V_{IN}, CIRCUIT 1, ILIM = GND

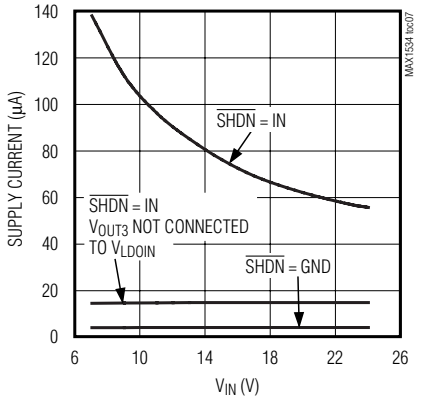

PEAK SWITCH CURRENT vs. V_{IN}, CIRCUIT 1, ILIM = IN

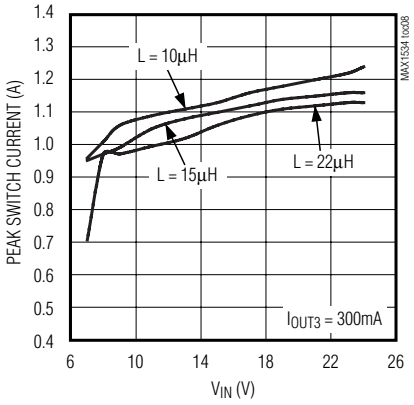

BUCK LOAD TRANSIENT

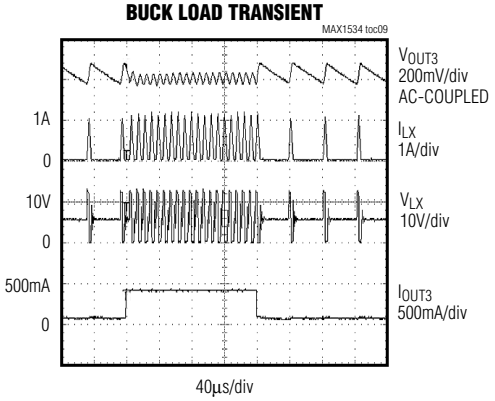

LINE TRANSIENT

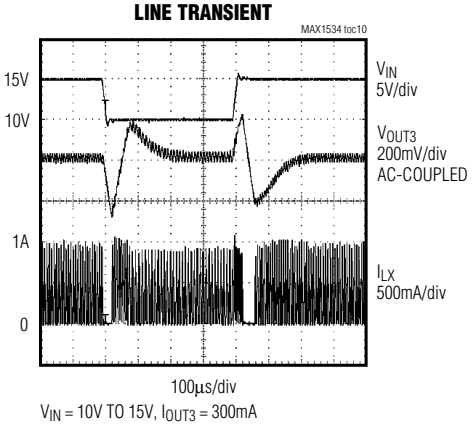

LINE TRANSIENT NEAR DROPOUT

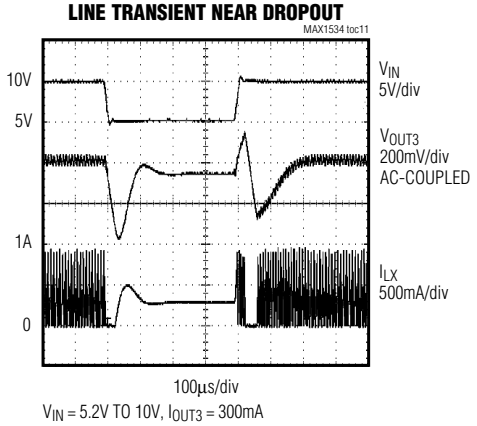

Typical Operating Characteristics (continued)

(Circuit of Figure 1, V_{IN} = +12V, $\overline{PRESET}$ = GND, T_A = +25°C, unless otherwise noted.)

LDO DROPOUT VOLTAGE vs. LOAD CURRENT

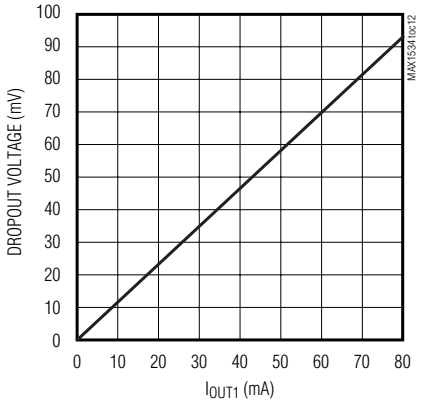

LDO DROPOUT VOLTAGE vs. V_{OUT1}

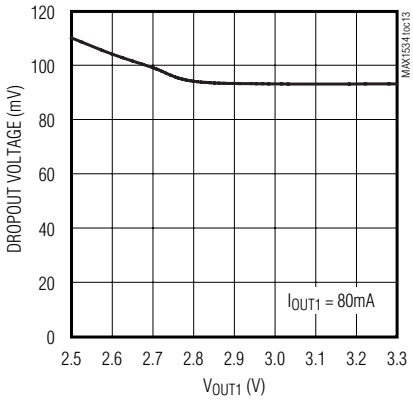

LDO PSRR vs. FREQUENCY

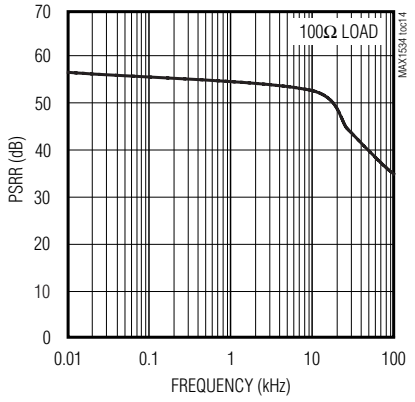

LDO LOAD TRANSIENT

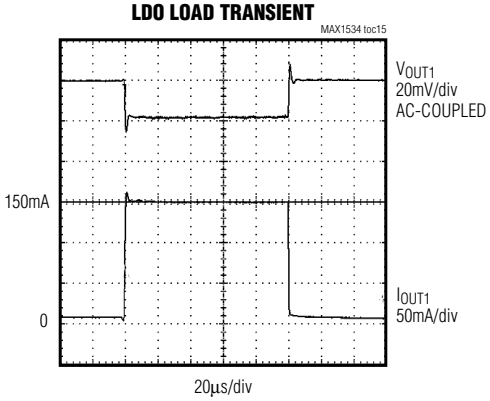

V_{LDOIN} = 5V, I_{OUT1} = 10mA TO 150mA

STARTUP WAVEFORMS

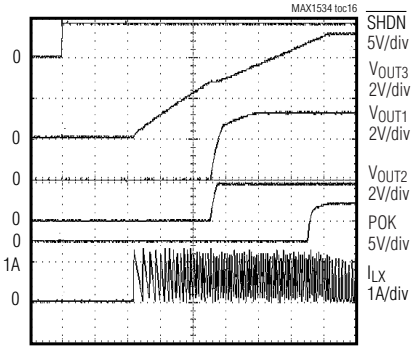

V_{IN} = 12V, R_{OUT1} = 33Ω, R_{OUT2} = 18Ω, R_{OUT3} = 50Ω

SHUTDOWN WAVEFORMS

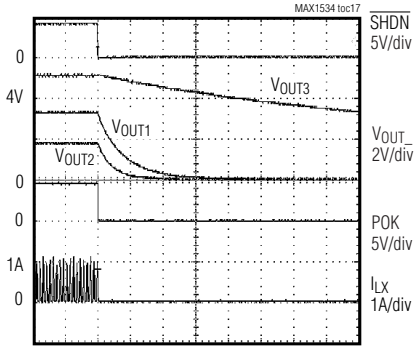

V_{IN} = 12V, R_{OUT1} = 33Ω, R_{OUT2} = 18Ω, R_{OUT3} = 50Ω

High-Efficiency, Triple-Output, Keep-Alive Power Supply for Notebook Computers

Pin Description

PIN	NAME	FUNCTION
1	$\overline{SHDN}$	Shutdown Control Input. Drive $\overline{SHDN}$ above 1V to start up, and below 0.9V to shut down. LX is high impedance in shut down, and supply current reduces to 3.5µA. Connect $\overline{SHDN}$ to IN for automatic startup. $\overline{SHDN}$ can be connected to IN through a resistive voltage-divider to implement a programmable undervoltage lockout.
2	POK	Open-Drain Power-OK (POK) Output. POK asserts low while any output voltage is below the reset threshold. Connect a 100kΩ pullup resistor to OUT_. POK is driven low in shut down. If not used, leave this pin unconnected.
3	GND	Ground. Connect backside pad to GND.
4	ILIM	Peak LX Current Control Input. Connect to IN for 1000mA peak LX current. Connect to GND for 500mA peak LX current.
5, 8	LX	Inductor Connection. Connect LX to external inductor and diode as shown in Figure 1. Both LX pins must be connected together on the PC board.
6, 7	IN	Buck Regulator Input Supply Voltage. Input voltage range is 4.5V to 24V. Both IN pins must be connected together on the PC board.
9	OUT2	Regulated LDO2 Output Voltage. Sources up to 160mA guaranteed. Bypass with 2.2µF (<0.2Ω typical ESR) ceramic capacitor to GND.
10	LDOIN	Input Supply for both LDOs. Supply voltage can range from 2.5V to 5.5V. Bypass with 2.2µF capacitor to GND (see *Capacitor Selection and LDO Stability*).
11	OUT1	Regulated LDO1 Output Voltage. Sources up to 160mA guaranteed. Bypass with 2.2µF (<0.2Ω typical ESR) ceramic capacitor to GND.
12	BP	LDO Reference Noise Bypass. Bypass with a low-leakage 0.01µF ceramic capacitor for reduced noise at both outputs.
13	FB1	Feedback Input for LDO1. For a fixed 3.3V output, connect $\overline{PRESET}$ and FB1 to GND. For an adjustable output, connect $\overline{PRESET}$ = IN and connect a resistive divider between OUT1 and GND.
14	FB2	Feedback Input for LDO2. For a fixed 1.8V output, connect $\overline{PRESET}$ and FB2 to GND. For an adjustable output, connect $\overline{PRESET}$ = IN and connect a resistive divider between OUT2 and GND.
15	$\overline{PRESET}$	Preset Feedback Select Input. Connect to GND for the preset 5V buck output voltage, preset 3.3V OUT1 output voltage, and preset 1.8V OUT2 output voltage. Connect $\overline{PRESET}$ to IN to select adjustable feedback mode for all three regulators.
16	FB3	Buck Output Feedback Input. For a fixed 5.0V output, connect $\overline{PRESET}$ to GND and FB3 to OUT3. For an adjustable output, connect $\overline{PRESET}$ to IN and connect a resistive divider between OUT3 and GND.

Detailed Description

The MAX1534 regulator provides efficient light-load power conversion for notebook computers or hand-held devices that require keep-alive power or standby power. The main step-down buck regulator uses a unique peak current-limited control scheme, providing high efficiency at light loads over a wide load range. Operation up to 100% duty cycle allows the lowest possible dropout voltage, increasing the usable supply voltage range. Under no load, the MAX1534 consumes only 1mW, and in shutdown mode, it draws only 3.5µA. The internal 24V switching MOSFET, internal current sensing, and a high-switching frequency minimize PC board space and component costs.

The MAX1534 includes two low-noise, low-dropout, low-quiescent-current linear regulators. The linear regulators are available with preset output voltages of 3.3V and 1.8V. Each linear regulator can supply loads up to 160mA.

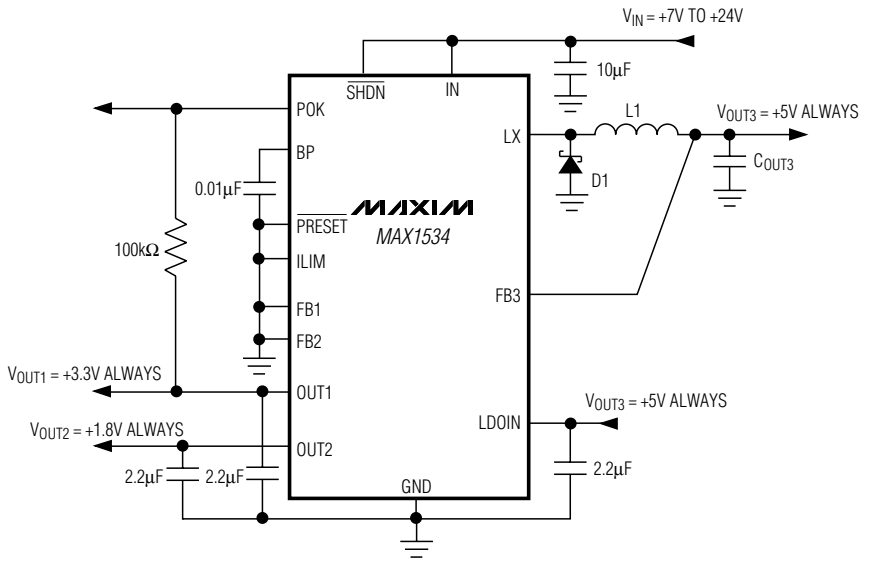

NOTE: SEE TABLE 1 FOR RECOMMENDED COMPONENT VALUES. SEE TABLE 2 FOR COMPONENT SUPPLIERS.

Figure 1. MAX1534 Typical Application Circuit

The MAX1534 PFM step-down topology consumes less power than the traditional linear regulator solution when converting from a high-input voltage source.

Buck Converter

Current-Limited Control Architecture

The MAX1534's buck converter uses a proprietary current-limited control scheme with operation to 100% duty cycle. This DC-to-DC converter pulses as needed to maintain regulation, resulting in a variable switching frequency that increases with the load. This eliminates the high supply currents associated with conventional constant-frequency pulse-width-modulation (PWM) controllers that switch the MOSFET unnecessarily.

When the output voltage is too low, the error comparator sets a flip-flop, which turns on the internal P-channel MOSFET and begins a switching cycle (Figure 2). As shown in Figure 3, the inductor current ramps up linearly, storing energy in a magnetic field while charging the output capacitor and servicing the load. The MOSFET turns off when the peak current limit is reached, or when the maximum on-time of 10µs is exceeded and the output voltage is in regulation. If the output is out of regulation and the peak current is never reached, the MOSFET remains on, allowing a duty cycle up to 100%. This feature ensures the lowest possible dropout voltage. Once the MOSFET turns off, the flip-flop resets, the inductor current is pulled through D1, and the current through the inductor ramps back down, transferring the stored energy to the output capacitor and load. The MOSFET remains off until the 0.42µs minimum off-time expires, and the output voltage drops out of regulation.

Current Limit (ILIM)

The MAX1534's buck converter has an adjustable peak current limit. Configure this peak current limit by connecting ILIM as shown in Table 3. Choose a current limit that realistically reflects the maximum load current. The maximum output current is half the peak current limit. Although choosing a lower current limit allows using an inductor with a lower current rating, it requires a higher inductance (see *Inductor Selection*) and does little to reduce inductor package size.

ILIM can be dynamically switched to achieve the highest efficiency over the load range. (See Buck Efficiency vs. Load Current (Circuit 1) in the *Typical Operating Characteristics*.

Linear Regulators

Internal P-Channel Pass Transistor

The MAX1534 features two 1.5Ω P-channel MOSFET pass transistors. A P-channel MOSFET provides several advantages over similar designs using PNP pass transistors, including longer battery life. It requires no

High-Efficiency, Triple-Output, Keep-Alive Power Supply for Notebook Computers

Table 1. Recommended Components

	CIRCUIT 1		CIRCUIT 2	
Input voltage	7V	24V	7V	24V
Max frequency	73kHz	175kHz	71kHz	160kHz
On-time	8.8µs	1µs	9µs	1µs
Buck output	5V, 500mA		5V, 250mA	
ILIM connection	IN		GND	
L1	15µH, 57mΩ, 1.60A Sumida CDRH6D38R-150		33µH, 124mΩ, 1.10A Sumida CDRH6D38R-330	
D1	1A, 30V Schottky Nihon EP10QY03		0.5A, 30V Schottky Nihon EP05Q03L	
C_{OUT3}	47µF, 6.3V, ceramic TDK C3225X5R0J476M		33µF, 6.3V, ceramic TDK C3225X5R0J336M	

Table 2. Component Suppliers

SUPPLIER	WEBSITE
DIODES	
Central Semiconductor	www.centralsemi.com
Fairchild Semiconductor	www.fairchildsemi.com
General Semiconductor	www.gensemi.com
International Rectifier	www.irf.com
Nihon	www.niec.co.jp
ON Semiconductor	www.onsemi.com
Vishay-Siliconix	www.vishay.com
Zetex	www.zetex.com
CAPACITORS	
AVX	www.avxcorp.com
Kemet	www.kemet.com
Nichicon	www.nichicon-us.com
Sanyo	www.sanyo.com
TDK	www.components.tdk.com
Taiyo Yuden	www.t-yuden.com
INDUCTORS	
Coilcraft	www.coilcraft.com
Coiltronics	www.cooperet.com
Pulse Engineering	www.pulseeng.com
Sumida USA	www.sumida.com
Toko	www.tokoam.com

base drive, which reduces quiescent current significantly. PNP-based regulators waste considerable current in dropout when the pass transistor saturates, and they also use high base-drive currents under large loads. The MAX1534 does not suffer from these problems. While a PNP-based regulator has dropout voltage that is independent of the load, a P-channel MOSFET's dropout voltage is proportional to load current, providing for low dropout voltage at heavy loads and extremely low dropout voltage at lighter loads.

Table 3. Current-Limit Configuration

ILIM	PEAK LX CURRENT LIMIT (mA)	MAXIMUM BUCK OUTPUT CURRENT (mA)
IN	1000	500
GND	500	250

Current Limit

The MAX1534 contain two independent current limiters, one for each linear regulator, which monitor and control the pass transistor's gate voltage, limiting the guaranteed maximum output current to 160mA minimum. The output can be shorted to ground for an indefinite time without damaging the part.

Low-Noise Operation

An external 0.01µF bypass capacitor at BP, in conjunction with an internal resistor, creates a lowpass filter, reducing the LDO output voltage noise.

Shutdown ($\overline{SHDN}$)

The MAX1534's accurate $\overline{SHDN}$ input can be used as a low-battery voltage detector. Drive $\overline{SHDN}$ above the 1V input rising-edge trip level to start up the MAX1534. The 100mV $\overline{SHDN}$ input hysteresis prevents the MAX1534 from oscillating between startup and shutdown. Drive $\overline{SHDN}$ low to shut down the MAX1534's buck converter and linear regulators. When in shut-

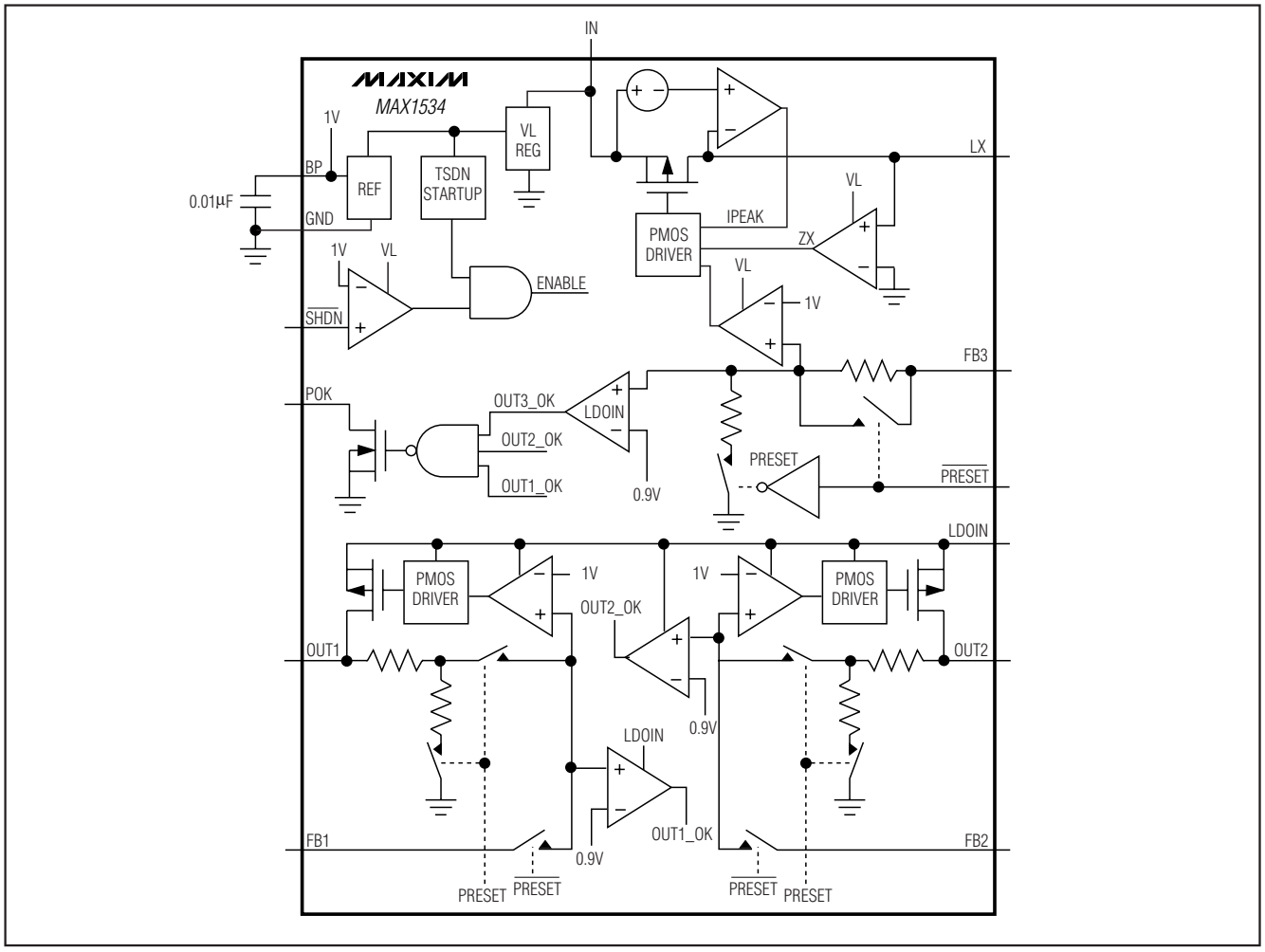

Figure 2. MAX1534 Functional Block Diagram

down, the supply current drops to 3.5µA, maximizing battery life. The internal P-channel MOSFET in the buck converter and linear regulators turn off to isolate each input from its output. The output capacitance and load current determine the rate at which the output voltage decays. For automatic shutdown and startup, connect SHDN to IN. Connect SHDN to IN through a resistive voltage-divider to implement a programmable undervoltage lockout. Do not leave SHDN floating.

Power-OK (POK)

The open-drain POK output is useful as a simple error flag, as well as a delayed reset output. POK sinks current when any of the three regulated output voltages is 11% below its regulation point. Connect POK to OUT_ through a high-value resistor for a simple error flag indicator. Connect a capacitor from POK to GND to produce a delayed POK signal (delay set by the RC time constant). POK is low in shutdown and is high impedance when all three outputs are in regulation.

Thermal-Overload Protection

Thermal-overload protection limits total power dissipation in the MAX1534. When the junction temperature exceeds T_J = +160°C, a thermal sensor turns off the pass transistor, allowing the IC to cool. The thermal sensor turns the IC on again after the IC's junction temperature cools by 15°C, resulting in a pulsed output during continuous thermal-overload conditions.

Thermal-overload protection is designed to protect the MAX1534 in the event of fault conditions. For continu-

High-Efficiency, Triple-Output, Keep-Alive Power Supply for Notebook Computers

ous operation, do not exceed the absolute maximum junction temperature rating of T_J = +150°C.

Operating Region and Power Dissipation

The MAX1534's maximum power dissipation depends on the thermal resistance of the case and circuit board, the temperature difference between the die junction and ambient air, and the rate of air flow. The power dissipated in the device is the sum of the buck MOSFET switching and conduction losses and the linear regulators' conduction losses. The maximum power dissipation is:

$$P_{MAX} = (T_J - T_A) / (\theta_{JB} + \theta_{BA})$$

where $T_J - T_A$ is the temperature difference between the MAX1534 die junction and the surrounding air, θ_{JB} (or θ_{JC}) is the thermal resistance of the package, and θ_{BA} is the thermal resistance through the printed circuit board, copper traces, and other materials to the surrounding air. The exposed backside pad of the MAX1534 provides a low thermal impedance to channel heat out of the package. Connect the exposed backside pad to ground using a large pad or ground plane.

Preset and Adjustable Output Voltages ($\overline{PRESET}$)

The MAX1534 features dual mode operation; it operates in either a preset voltage mode (see Table 4) or an adjustable mode. In preset voltage mode, internal trimmed feedback resistors set the MAX1534 outputs to 3.3V for V_{OUT1}, 1.8V for V_{OUT2}, and 5.0V for FB3 (buck regulator). Select this mode by connecting $\overline{PRESET}$ to ground. Connect $\overline{PRESET}$ to IN to operate the MAX1534 in the adjustable mode. Select an output voltage using two external resistors connected as a voltage-divider to FB_ (Figure 4). The output voltage is set by the following equation:

$$V_{OUT_} = V_{FB_}\left(1+\frac{R_{TOP_}}{R_{BOT_}}\right)$$

where $V_{FB_}$ = 1.0V, V_{OUT1} and V_{OUT2} can range from 1.0V to V_{LDOIN}, and V_{OUT3} can range from 1.0V to V_{IN}. To simplify resistor selection:

$$R_{TOP_} = R_{BOT_}\left(\frac{V_{OUT_}}{V_{FB_}}-1\right)$$

Choose $R_{BOT_}$ = 100kΩ to optimize power consumption, accuracy, and high-frequency power-supply rejection. The total current through the external resistive feedback and load resistors should not be less than 10µA. Since the $V_{FB_}$ tolerance is typically less than ±15mV, the output can be set using fixed resistors instead of trim pots.

Table 4. $\overline{PRESET}$ Setting

$\overline{PRESET}$	MODE	OUT_ AND FB_
IN	Adjustable	FB_ regulates to 1.0V
GND	Preset	OUT1 = 3.3V, FB1 = GND, OUT2 = 1.8V, FB2 = GND, OUT3 = FB3 = 5.0V

Design Procedure

Buck Converter

Inductor Selection

When selecting the inductor, consider these four parameters: inductance value, saturation rating, series resistance, and size. The MAX1534 operates with a wide range of inductance values. For most applications, values between 10µH and 50µH work best with the controller's high switching frequency. Larger inductor values reduce the switching frequency and thereby improve efficiency and EMI. The trade-off for improved efficiency is a higher output ripple and slower transient response. On the other hand, low-value inductors respond faster to transients, improve output ripple, offer smaller physical size, and minimize cost. If the inductor value is too small, the peak inductor current exceeds the current limit due to current-sense comparator propagation delay, potentially exceeding the inductor's current rating. Calculate the minimum inductance value as follows:

$$L_{(MIN)} = \frac{\left(V_{IN(MAX)} - V_{OUT3}\right) \times t_{ON(MIN)}}{I_{LX(PEAK)}}$$

where $t_{ON(MIN)}$ = 0.5µs.

The inductor's saturation current rating must be greater than the peak switch current limit, plus the overshoot due to the 150ns current-sense comparator propagation delay. Saturation occurs when the inductor's magnetic flux density reaches the maximum level the core can support and the inductance starts to fall. Choose an inductor with a saturation rating greater than I_{PEAK} in the following equation:

$$I_{PEAK} = I_{LX(PEAK)} + (V_{IN} - V_{OUT3}) \times 150ns / L$$

Inductor series resistance affects both efficiency and dropout voltage (see the *Buck Dropout Performance* section).

High series resistance limits the maximum current available at lower input voltages, and increases the dropout

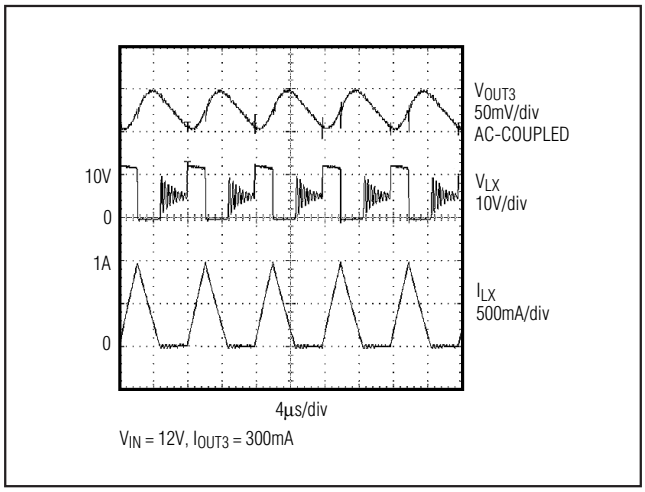

Figure 3. Normal Buck Operation

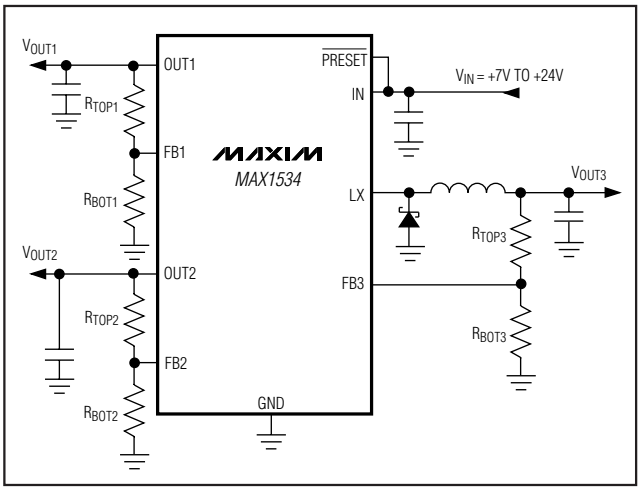

Figure 4. Adjustable Output Voltages

voltage. For optimum performance, select an inductor with the lowest possible DC resistance that fits in the allotted dimensions. Some recommended component manufacturers are listed in Table 2.

Maximum Buck Output Current

The MAX1534's buck converter's maximum output current is limited by the peak inductor current. For the typical application, the maximum output current is approximately:

$$I_{OUT3(MAX)} = 1/2\ I_{LX\ (PEAK)(MIN)}$$

For low-input voltages, the maximum on-time can be reached and the load current is limited by:

$$I_{OUT3} = 1/2\ (V_{IN} - V_{OUT3}) \times 10\mu s / L$$

Note that any current provided by the linear regulators comes from the buck regulator and subtracts from the maximum current that the buck provides for other loads.

Buck Output Capacitor Selection

Choose the output capacitor to service the maximum load current with acceptable voltage ripple. The output ripple has two components: variations in the charge stored in the output capacitor with each LX pulse, and the voltage drop across the capacitor's equivalent series resistance (ESR) caused by the current into and out of the capacitor:

$$V_{RIPPLE} \cong V_{RIPPLE(ESR)} + V_{RIPPLE(C)}$$

The output voltage ripple as a consequence of the ESR and output capacitance is:

$$V_{RIPPLE(ESR)} = ESR \times I_{PEAK}$$

$$V_{RIPPLE(C)} = \frac{L \times (I_{PEAK} - I_{OUT3})^2}{2C_{OUT3} \times V_{OUT3}} \left(\frac{V_{IN}}{V_{IN} - V_{OUT3}} \right)$$

where I_{PEAK} is the peak inductor current (see *Inductor Selection*). The worst-case ripple occurs at no load. These equations are suitable for initial capacitor selection, but final values should be set by testing a prototype or evaluation circuit. As a general rule, a smaller amount of charge delivered in each pulse results in less output ripple. Since the amount of charge delivered in each oscillator pulse is determined by the inductor value and input voltage, the voltage ripple increases with larger inductance, and as the input voltage decreases. See Table 1 for recommended capacitor values and Table 2 for recommended component manufacturers.

Buck Input Capacitor Selection

The input filter capacitor reduces peak currents drawn from the power source and reduces noise and voltage ripple on the input caused by the circuit's switching. The input capacitor must meet the ripple-current requirement (I_{RMS}) imposed by the switching current defined by the following equation:

$$I_{RMS} = \frac{I_{OUT3} \times V_{OUT3}}{V_{IN}} \sqrt{\left(\frac{4}{3}\right) \times \frac{V_{IN}}{V_{OUT3}} - 1}$$

For most applications, nontantalum chemistries (ceramic, aluminum, polymer, or OSCON) are preferred due to their robustness to high inrush currents typical of systems with low-impedance battery inputs. Choose an

High-Efficiency, Triple-Output, Keep-Alive Power Supply for Notebook Computers

input capacitor that exhibits less than +10°C temperature rise at the RMS input current for optimal circuit longevity.

Diode Selection

The current in the external diode (D1 in Figure 1) changes abruptly from zero to its peak value each time the LX switch turns off. To avoid excessive losses, the diode must have a fast turn-on time and a low forward voltage. Make sure that the diode's peak current rating exceeds the peak current set by the current limit, and that its breakdown voltage exceeds V_{IN}. Use Schottky diodes when possible.

Linear Regulators

Capacitor Selection and LDO Stability

Use a 2.2µF capacitor on the MAX1534 LDOIN pin and a 2.2µF capacitor on the outputs. Larger input capacitor values and lower ESRs provide better supply-noise rejection and line-transient response. To reduce noise, improve load transients, and for loads up to 160mA, use larger output capacitors (up to 10µF). For stable operation over the full temperature range and with load currents up to 80mA, use 2.2µF. Note that some ceramic dielectrics exhibit large capacitance and ESR variation with temperature. With dielectrics such as Z5U and Y5V, it may be necessary to use 4.7µF or more to ensure stability at temperatures below -10°C. With X7R or X5R dielectrics, 2.2µF is sufficient at all operating temperatures. These regulators are optimized for ceramic capacitors, and tantalum capacitors are not recommended.

Use a 0.01µF bypass capacitor at BP for low output voltage noise. Increasing the capacitance slightly decreases the output noise, but increases the startup time.

Applications Information

Buck Dropout Performance

A step-down converter's minimum input-to-output voltage differential (dropout voltage) determines the lowest usable supply voltage. In battery-powered systems, this limits the useful end-of-life battery voltage. To maximize battery life, the MAX1534 operates with duty cycles up to 100%, which minimizes the dropout voltage and eliminates switching losses while in dropout. When the supply voltage approaches the output voltage, the P-channel MOSFET remains on continuously to supply the load.

For a step-down converter with 100% duty cycle, dropout depends on the MOSFET drain-to-source on-resistance and inductor series resistance; therefore, it is proportional to the load current:

$$V_{DROPOUT(BUCK)} = I_{OUT3} \times (R_{LX} + R_{INDUCTOR})$$

LDO PSRR

The MAX1534's linear regulators are designed to deliver low dropout voltages and low quiescent currents in battery-powered systems. Power-supply rejection is 55dB at low frequencies and rolls off above 20kHz. (See the LDO PSRR vs. Frequency graph in the *Typical Operating Characteristics*.)

To improve supply-noise rejection and transient response, increase the values of the input and output bypass capacitors or use passive filtering techniques.

LDO Dropout Voltage

A linear regulator's minimum input-output voltage differential (or dropout voltage) determines the lowest usable supply voltage. Because the MAX1534 uses a P-channel MOSFET pass transistor, its dropout voltage is a function of drain-to-source on-resistance ($R_{DS(ON)}$) multiplied by the load current (see LDO Dropout Voltage vs. Load Current in the *Typical Operating Characteristics*).

PC Board Layout Guidelines

High switching frequencies and large peak currents make PC board layout an important part of the design. Poor layout introduces switching noise into the feedback path, resulting in jitter, instability, or degraded performance. High current traces, highlighted in the *Typical Application Circuit* (Figure 1), should be as short and wide as possible. Additionally, the current loops formed by the power components (C_{IN}, C_{OUT3}, L1, and D1) should be as short as possible to avoid radiated noise. Connect the ground pins of these power components at a common node in a star-ground configuration. Separate the noisy traces, such as the LX node, from the feedback network with grounded copper. Furthermore, keep the extra copper on the board and integrate it into a pseudoground plane. When using external feedback, place the resistors as close to the feedback pin as possible to minimize noise coupling.

Pin Configuration

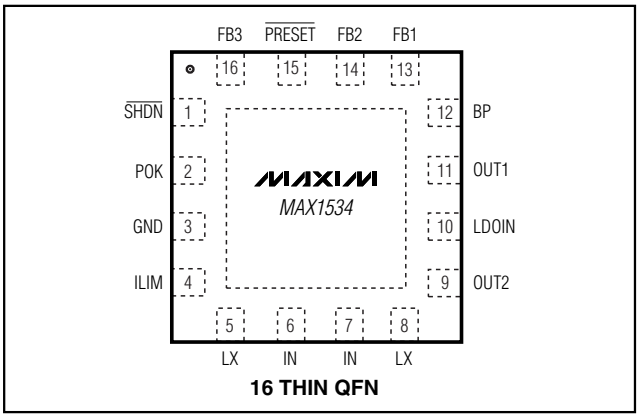

16 THIN QFN

Chip Information

TRANSISTOR COUNT: 1512

PROCESS: BiCMOS

High-Efficiency, Triple-Output, Keep-Alive Power Supply for Notebook Computers

Package Information

(The package drawing(s) in this data sheet may not reflect the most current specifications. For the latest package outline information, go to **www.maxim-ic.com/packages**.)

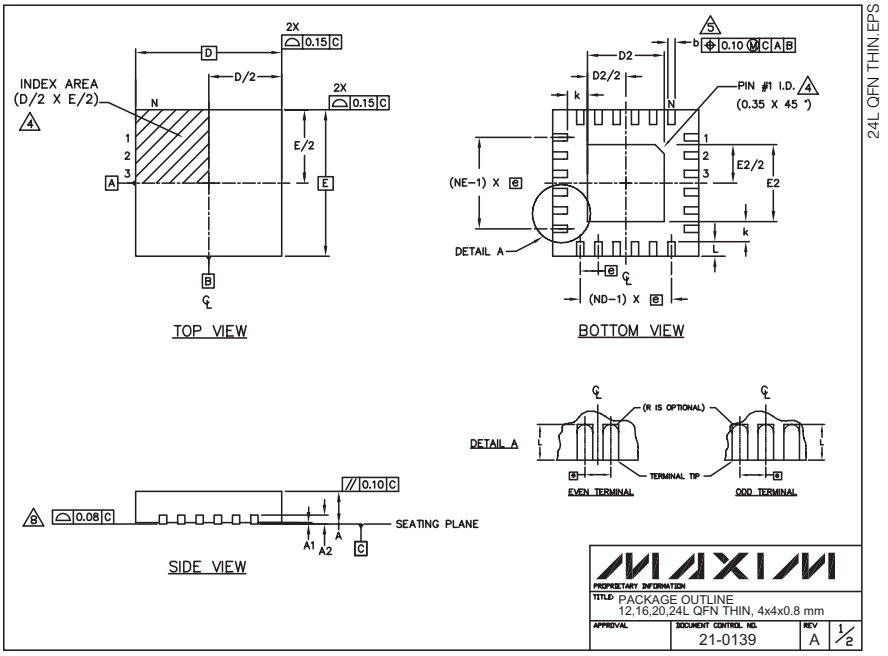

COMMON DIMENSIONS												
PKG	12L 4x4			16L 4x4			20L 4x4			24L 4x4		
REF.	MIN.	NOM.	MAX.	MIN.	NOM.	MAX.	MIN.	NOM.	MAX.	MIN.	NOM.	MAX.
A	0.70	0.75	0.80	0.70	0.75	0.80	0.70	0.75	0.80	0.70	0.75	0.80
A1	0.0	0.02	0.05	0.0	0.02	0.05	0.0	0.02	0.05	0.0	0.02	0.05
A2	0.20 REF			0.20 REF			0.20 REF			0.20 REF		
b	0.25	0.30	0.35	0.25	0.30	0.35	0.20	0.25	0.30	0.18	0.23	0.30
D	3.90	4.00	4.10	3.90	4.00	4.10	3.90	4.00	4.10	3.90	4.00	4.10
E	3.90	4.00	4.10	3.90	4.00	4.10	3.90	4.00	4.10	3.90	4.00	4.10
e	0.80 BSC.			0.65 BSC.			0.50 BSC.			0.50 BSC.		
k	0.25	–	–	0.25	–	–	0.25	–	–	0.25	–	–
L	0.45	0.55	0.65	0.45	0.55	0.65	0.45	0.55	0.65	0.30	0.40	0.50
N	12			16			20			24		
ND	3			4			5			6		
NE	3			4			5			6		
Jedec Var.	WGGB			WGGC			WGGD-1			WGGD-2		

EXPOSED PAD VARIATIONS						
PKG. CODES	D2			E2		
	MIN.	NOM.	MAX.	MIN.	NOM.	MAX.
T1244-2	1.95	2.10	2.25	1.95	2.10	2.25
T1644-2	1.95	2.10	2.25	1.95	2.10	2.25
T2044-1	1.95	2.10	2.25	1.95	2.10	2.25
T2444-1	2.45	2.60	2.63	2.45	2.60	2.63

NOTES:
1. DIMENSIONING & TOLERANCING CONFORM TO ASME Y14.5M–1994.
2. ALL DIMENSIONS ARE IN MILLIMETERS. ANGLES ARE IN DEGREES.
3. N IS THE TOTAL NUMBER OF TERMINALS.
4. THE TERMINAL #1 IDENTIFIER AND TERMINAL NUMBERING CONVENTION SHALL CONFORM TO JESD 95–1 SPP–012. DETAILS OF TERMINAL #1 IDENTIFIER ARE OPTIONAL, BUT MUST BE LOCATED WITHIN THE ZONE INDICATED. THE TERMINAL #1 IDENTIFIER MAY BE EITHER A MOLD OR MARKED FEATURE.
5. DIMENSION b APPLIES TO METALLIZED TERMINAL AND IS MEASURED BETWEEN 0.25 mm AND 0.30 mm FROM TERMINAL TIP.
6. ND AND NE REFER TO THE NUMBER OF TERMINALS ON EACH D AND E SIDE RESPECTIVELY.
7. DEPOPULATION IS POSSIBLE IN A SYMMETRICAL FASHION.
8. COPLANARITY APPLIES TO THE EXPOSED HEAT SINK SLUG AS WELL AS THE TERMINALS.
9. DRAWING CONFORMS TO JEDEC MO220.

PROPRIETARY INFORMATION
TITLE: PACKAGE OUTLINE
12,16,20,24L QFN THIN, 4x4x0.8 mm
APPROVAL
DOCUMENT CONTROL NO. 21-0139
REV A
2/2

Maxim cannot assume responsibility for use of any circuitry other than circuitry entirely embodied in a Maxim product. No circuit patent licenses are implied. Maxim reserves the right to change the circuitry and specifications without notice at any time.

© 2002 Maxim Integrated Products Printed USA MAXIM is a registered trademark of Maxim Integrated Products.