General Description

The MAX16813 evaluation kit (EV kit) demonstrates the MAX16813 high-brightness LED (HB LED) driver, integrating a step-up DC-DC preregulator followed by 4 channels of linear current sinks. The step-up preregulator switches at 350kHz and operates as a current-mode-controlled regulator capable of providing up to 600mA for the linear circuits. Each of the 4 linear channels are capable of operating up to 40V and provide up to 150mA per channel. The 4 channels are configurable for 100mA or 150mA HB LED output current.

The EV kit operates from a 6.5V DC supply voltage up to the HB LED string-forward voltage. The EV kit can withstand a 40V load-dump condition for up to 400ms. The EV kit demonstrates the device features such as adaptive voltage optimization, undervoltage lockout (UVLO), overvoltage protection (OVP), cycle-by-cycle current limit, thermal shutdown, and digital PWM dimming operation using a digital PWM input signal to control the brightness of the HB LEDs. The EV kit includes an external pMOSFET (Q2) that can be used to disconnect the boost output from the battery in the event of an output overload or short condition.

The MAX16813 EV kit can also be used to evaluate the MAX16813B with simple IC replacement of U1.

Benefits and Features

- 6.5V Up to HB LED Forward Voltage
- Demonstrates OVP (33V)
- HB LED String Output Currents Configurable for 100mA or 150mA
- Demonstrates UVLO (4V)
- Demonstrates Cycle-by-Cycle Current-Limit and Thermal-Shutdown Features
- Demonstrates Adaptive-Voltage Optimization
- Demonstrates Output Short Protection and Ultra-Low Current Shutdown
- Proven PCB and Thermal Design
- Fully Assembled and Tested

Ordering Information ***appears at end of data sheet.***

Component List

DESIGNATION	QTY	DESCRIPTION
C1, C23	2	4.7µF ±10%, 50V X7R ceramic capacitors (1210) Murata GRM32ER71H475K
C2	1	47µF, 50V electrolytic capacitor (6.3mm x 7.7mm Case) SANYO 50CE47KX
C3, C4, C7, C12	4	1µF ±10%, 50V X7R ceramic capacitors (0805) Murata GRM21BR71H105K
C5	1	33µF, 50V electrolytic capacitor (6.3mm x 7.7mm Case) SANYO 50CE33KX
C6	0	Not installed, electrolytic capacitor (6.3mm x 7.7mm Case)

DESIGNATION	QTY	DESCRIPTION
C8, C13–C16	0	Not installed, ceramic capacitors (0603)
C9, C11	2	1000pF ±5%, 25V C0G ceramic capacitors (0603) Murata GRM1885C1E102J
C10	1	0.022µF ±10%, 50V X7R ceramic capacitor (0603) Murata GRM188R71H223K
C17	1	47pF ±5%, 50V C0G ceramic capacitor (0603) Murata GRM1885C1H470J
C18–C21	4	2200pF ±5%, 50V C0G ceramic capacitors (0603) Murata GRM1885C1H222J

maxim integrated™

Component List (continued)

DESIGNATION	QTY	DESCRIPTION
C22	1	0.047µF ±10%, 50V X7R ceramic capacitor (0603) Murata GRM188R71H473K
D1, D3	2	60V 1A Schottky diodes (SMB) Diodes Inc. B160B-13-F
D2	1	75V, 250mA high-speed diode (SOT23) Central Semi CMPD914E (Top Mark: C5DE)
D4	1	18V zener diode (DO-214AC) Vishay BZG03C18TR
FB1	1	0Ω resistor (1210)
JU3–JU11	9	2-pin headers
JU2	1	3-pin header
L1	1	10µH ±20%, 3A inductor Coilcraft MSS1048-103ML
L2	1	22µH ±20%, 5A inductor Coilcraft MSS1260-223Ml
OVP, PGATE, VCC	3	Miniature red PC test points
Q1	1	40V, 200mA pnp transistor (3 SOT23) Diodes Inc. MMBT3906-7-F
Q2	1	60V, 55A p-channel MOSFET (D2PAK) Vishay SUM55P06-19L-E3
Q3	1	40V, 9A n-channel MOSFET (8 SO) International Rectifier IRF7469

DESIGNATION	QTY	DESCRIPTION
R1	1	10kΩ ±5% resistor (0603)
R2	1	1MΩ ±5% resistor (0603)
R3	1	22Ω ±5% resistor (0805)
R4	1	0.1Ω ±1%, 0.5W resistor (2010) IRC LRC-LRF2010LF-01-R100-F
R5	1	2.4kΩ ±1% resistor (0805)
R6	1	261kΩ 1% resistor (0805)
R7	1	10kΩ ±1% resistor (0805)
R8, R9	2	10kΩ ±5% resistors (0805)
R10	1	30.1kΩ ±1% resistor (0805)
R11	1	20kΩ ±1% resistor (0805)
R12	1	200Ω ±1% resistor (0603)
R13	1	21kΩ ±1% resistor (0603)
R14, R15	2	15kΩ ±1% resistors (0805)
R16	1	30.1kΩ ±1% resistor (0805)
R17	0	Not installed, resistor (0603)
R18	1	1kΩ ±5% resistor (0805)
R19	1	1.4kΩ ±1% resistor (0805)
R20	0	Not installed, resistor
R21	1	0.1Ω ±1, 0.5W current-sense resistor (1206) IRC LRC-LR1206LF-01-R100-F
SGND	1	Miniature black PC test point
U1	1	4-channel HB LED driver controller (20 TQFN-EP*) Maxim MAX16813ATP/V+
—	7	Shunts
—	1	PCB: MAX16813 EVKIT

**EP = Exposed pad.*

Quick Start

Required Equipment

- MAX16813 EV kit
- 6.5V to 40V, 4A DC power supply
- Digital voltmeter
- Four series-connected HB LED strings rated no less than 150mA
- Current probe to measure the HB LED current

Output Testing

The EV kit is fully assembled and tested. Follow the steps below to verify board operation. **Caution: Do not turn on the power supply until all connections are completed.**

1) Verify that a shunt is installed on jumper JU1 and across pins 1-2 on jumper JU2 (device enabled).
2) Verify that a shunt is installed on jumper JU3 (150mA HB LED current-sink limit).
3) Verify that shunts are not installed on jumpers JU4–JU7 (all channels powered).
4) Connect the power supply to the VIN PCB pad and the power supply's ground to the PGND PCB pad.
5) Connect the digital voltmeter across the OUT1 and PGND PCB pads.
6) Connect each HB LED string as follows:

   Channel 1: Connect an HB LED string anode to the VOUT PCB pad and the cathode to the OUT1 PCB pad.

   Channel 2: Connect an HB LED string anode to the VOUT PCB pad and the cathode to the OUT2 PCB pad.

   Channel 3: Connect an HB LED string anode to the VOUT PCB pad and the cathode to the OUT3 PCB pad.

   Channel 4: Connect an HB LED string anode to the VOUT PCB pad and the cathode to the OUT4 PCB pad.
7) Clip the current probe across the channel 1, HB LED+ wire to measure the HB LED current.
8) Turn on the power supply and set to 10V.
9) Measure the voltage from the OUT1–OUT4 PCB pads to SGND and verify that the lowest voltage is approximately 1.1V.
10) Measure the HB LED current using the current probe and verify all channels.

Detailed Description of Hardware

The MAX16813 EV kit demonstrates the MAX16813 HB LED driver with an integrated step-up DC-DC preregulator followed by 4 channels of linear current sinks. The preregulator switches at 350kHz and operates as a current-mode-controlled regulator providing up to 600mA for the linear circuit while providing OVP. Cycle-by-cycle current limit is set by resistor R4 while resistors R6 and R7 set the OVP voltage to 33V. The preregulator power section consists of inductor L2, MOSFET Q3, power sense resistor R4, and switching diode D1.

The EV kit circuit operates from a DC supply voltage of 6.5V up to the HB LED forward string voltage. The circuit handles load-dump conditions up to 40V.

The EV kit circuit demonstrates ultra-low shutdown current when the EN pin of the device is pulled to ground by shorting the ENABLE PCB pad to ground. The EV kit also demonstrates output short protection and recovery from short. This can be tested by shorting the VOUT PCB pad to the PGND PCB pad.

Each of the 4 linear channels (OUT1–OUT4) is capable of operating up to 40V and sink up to 150mA per channel. Each of the 4 channel's linear current sinks is configurable for 150mA or 100mA, or can be disabled independently. Jumpers JU4–JU7 provide the disable feature when the HB LED string is not connected. See the *Channel 1–Channel 4 Current-Sink Disabling* section. Resistors R15, R16, and jumper JU3 configure the linear current setting for the device's SETI pin, which sets the HB LED string current.The EV kit features PCB pads to facilitate connecting HB LED strings for evaluation. The VOUT PCB pads provide connections for connecting each HB LED string's anode to the DC-DC preregulator output. The OUT1–OUT4 PCB pads provide connections for connecting each HB LED string's cathode to the respective linear channel's current sink. Additionally, 2-pin headers (JU8–JU11) provide convenient access to the VOUT and respective OUT_ connections when using a twisted-pair wiring-connection scheme. On each header, pin 1 provides access to the respective OUT_ connection and pin 2 provides access to the VOUT connection. Capacitors C18–C21 are included on the design to prevent oscillations and provide stability when using long, untwisted HB LED-connecting cables during lab evaluation. These capacitors are not required on a typical HB LED design.

A DIM PCB pad is provided for using a digital PWM signal to control the brightness of the HB LEDs. The EV kit can also demonstrate the device's synchronizing feature using the SYNC PCB pad and an external AC clock

signal. Test points are also provided for easy access to the device's V_{CC} and SGND.

Enable

The EV kit features an enable input that can be used to enable and disable the device and place it in shutdown mode. To enable the EV kit whenever power is applied to VIN and PGND, place the jumper across pins 1-2 on jumper JU2.

To enable the EV kit from an external enable signal, place the jumper across pins 2-3 on JU2. In this configuration, apply a logic signal on the ENABLE input pad on the EV kit. The enable EN input should not be left unconnected.

Refer to the *Enable* section in the MAX16813 IC data sheet for additional information. See Table 1 for jumper JU2 settings.

HB LED Current

The EV kit features jumper JU3 to reconfigure the device's current sinks on all 4 channels. Place a shunt on jumper JU3 to configure the current-sink limits to 150mA. Remove the shunt from JU3 to configure the current-sink limits to 100mA. See Table 2 for jumper JU3 settings.

To reconfigure the circuit for another current-sink threshold, replace resistor R15 and use the following equation to calculate a new value for the desired current:

$$R15 = \frac{1500}{I_{LED}}$$

where I_{LED} is the desired HB LED current in amps and R15 is the new resistor value for obtaining the desired HB LED current. Remove jumper JU3 when configuring for another current-sink threshold. If the HB LED current is reconfigured for a different current, other components on the EV kit may need to be modified. Refer to the MAX16813 IC data sheet to calculate other component values.

Channel 1–Channel 4 Current-Sink Disabling

The EV kit features jumpers JU4–JU7 to disable each channel's OUT_ current sink. To disable a channel, install a jumper in the channel's respective OUT_ jumper. Remove the shunt to use a channel's OUT_ sink capability. See Table 3 for JU4–JU7 jumper settings.

HB LED Digital Dimming Control

The EV kit features a DIM PCB input pad for connecting an external digital PWM signal. The DIM PCB pad is pulled up to VCC by resistor R8. Apply a digital PWM signal with a 0.8V logic-low (or less) 2.1V logic-high (or greater) level, and frequencies from 100Hz to 20kHz. To adjust the HB LED brightness, vary the signal duty cycle from 0 to 100% and maintain a minimum pulse width of 500ns. Apply the digital PWM signal to the DIM and SGND PCB pads. Refer to the *LED Dimming Control* section in the MAX16813 IC data sheet for additional information on the device's dimming feature.

$\overline{FLT}$ and RT (External Clock Synchronizing) Signals

The EV kit features the device's $\overline{FLT}$ and AC-coupled RT signals. The $\overline{FLT}$ signal is pulled up to VCC by resistor R9.

Table 1. Enable (JU2)

SHUNT POSITION	EN PIN	EV KIT OPERATION
1-2*	Connected to IN	Enabled
2-3 (ENABLE test pad shorted to SGND)	Connected to SGND	Disabled
2-3 (ENABLE test pad connected to an external controller)	Connected to an external controller	External controller enabled

**Default position.*

Table 2. HB LED Current (JU3)

SHUNT POSITION	SETI PIN	HB LED CURRENT-SINK LIMITS (mA)
Not installed	Connected to R15	100
Installed*	Connected to R15 and R16	150

**Default position.*

An open-drain fault flag output ($\overline{FLT}$) goes low when an open-LED string is detected, a shorted-LED string is detected, an output undervoltage, or during thermal shutdown. Refer to the *Fault Protections* section in the MAX16813 IC data sheet for additional information on the $\overline{FLT}$ signal.

The SYNC PCB pad is used for connecting an external clock for synchronizing the device's switching frequency through its RT pin. The signal must also have a $4V_{P-P}$ amplitude and frequencies from 390kHz to 410kHz. Apply the external clock signal to the SYNC and SGND PCB pads. Refer to the *Oscillator Frequency/External Synchronization* section in the MAX16813 IC data sheet for additional information on the device's synchronizing feature.

OVP Configuration

The device's OVP resistors (R6 and R7) are configured for an OVP of 33V. This sets the maximum channel (VOUT) voltage at 33V. Capacitor C9 provides noise filtering to the OVP signal. To reconfigure the circuit for a different OVP voltage, replace resistor R6 with a different value using the following equation:

$$R6 = \left(\frac{OVP}{1.23V} - 1\right) \times R7$$

where R7 is 10kΩ, OVP is the overvoltage-protection voltage desired, and R6 is the new resistor value for obtaining the desired overvoltage protection. Refer to the *Open-LED Management and Overvoltage Protection* section in the MAX16813 IC data sheet for additional information on the OVP feature.

Output Short Protection

The boost output appearing at VOUT can be shorted to PGND without any damage. This can be tested at power-up or it can also be done at any time during normal operation by shorting the VOUT PCB pad to PGND. The ENABLE PCB pad can be connected to IN by installing jumper JU2 from pins 1-2. When the unit is powered up with a short on VOUT to PGND, resistor R21 in conjunction with the transistor Q1 limits the current that can flow in Q2 once it is turned on. The current is limited to VBE(Q1)/R21. This current flows for 33ms (typ) into the short after power-up. Refer to the *Startup Sequence* section in the MAX16813 IC data sheet for more information. After 33ms of power-up, the IC is disabled and the external MOSFET Q2 is turned off. The IC is then latched off and ENABLE has to be recycled, or input power has to be recycled, to resume operation after the short is removed.

The VOUT PCB pad can also be shorted to PGND at any time during normal operation. An output short causes the voltage on the OVP pin to go below 0.585mV resulting in an output undervoltage, which causes the PGATE pin to go high and disconnects the external MOSFET Q2 from the input. The $\overline{FLT}$ pin also goes low in the case of a short on the output.

Table 3. Disabling Channel 1–Channel 4 (JU4–JU7)

OUT_	JUMPER	SHUNT POSITION	CHANNEL OPERATION
OUT1	JU4	Not installed	Channel 1 operational, connect an HB LED string* to VOUT and OUT1.
		Installed	Channel 1 OUT1 not used.
OUT2	JU5	Not installed	Channel 2 operational, connect an HB LED string* to VOUT and OUT2.
		Installed	Channel 2 OUT2 not used.
OUT3	JU6	Not installed	Channel 3 operational, connect an HB LED string* to VOUT and OUT3.
		Installed	Channel 3 OUT3 not used.
OUT4	JU7	Not installed	Channel 4 operational, connect an HB LED string* to VOUT and OUT4.
		Installed	Channel 4 OUT4 not used.

**The series-connected HB LED string must be rated no less than 150mA.*

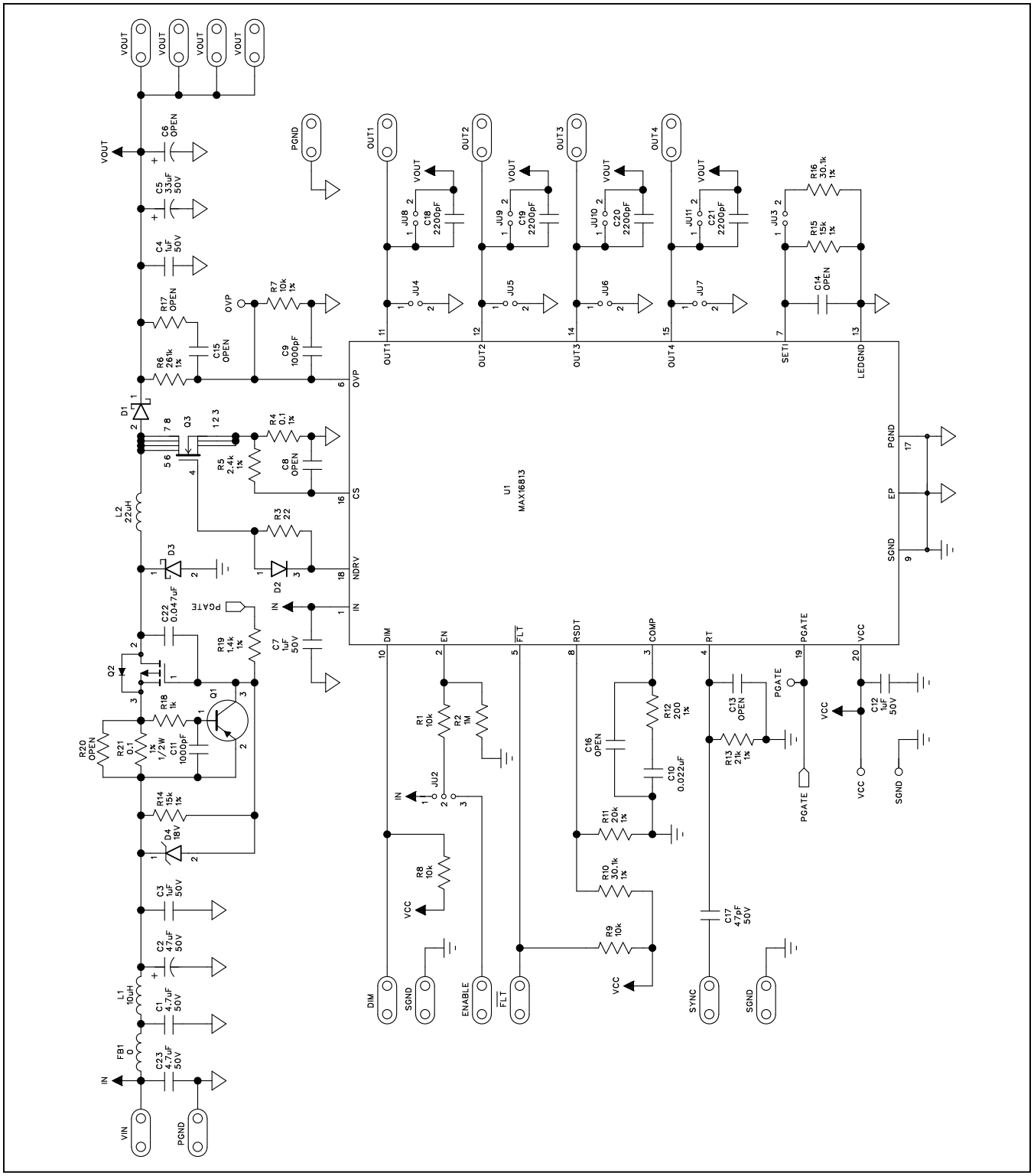

Figure 1. MAX16813 EV Kit Schematic

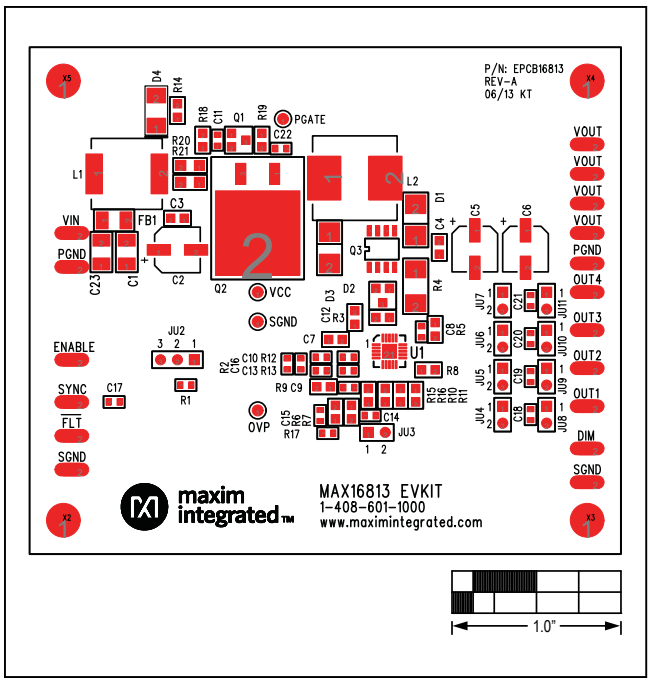

Figure 2. MAX16813 EV Kit Component Placement Guide—Component Side

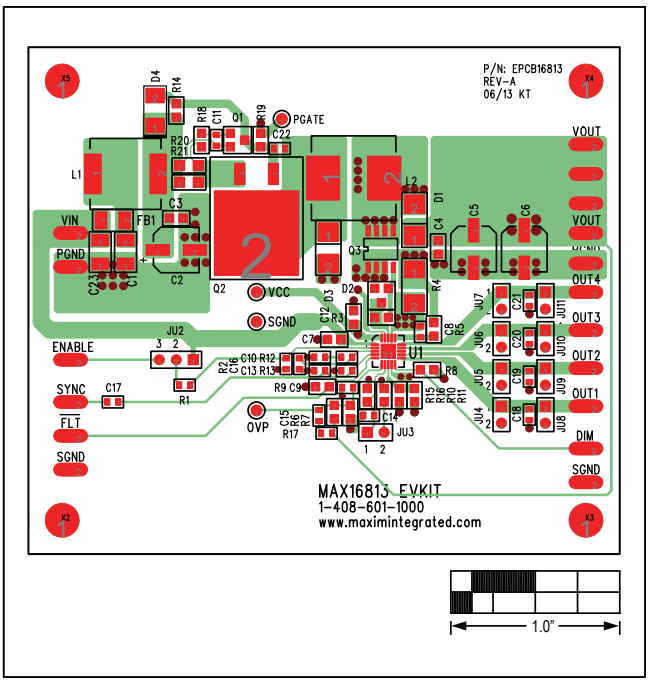

Figure 3. MAX16813 EV Kit PCB Layout—Component Side

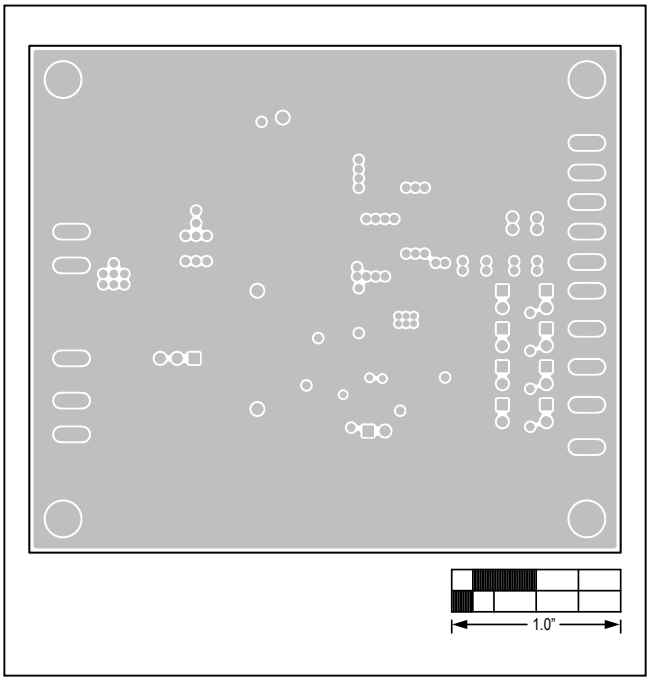

Figure 4. MAX16813 EV Kit PCB Layout—SGND Layer 2

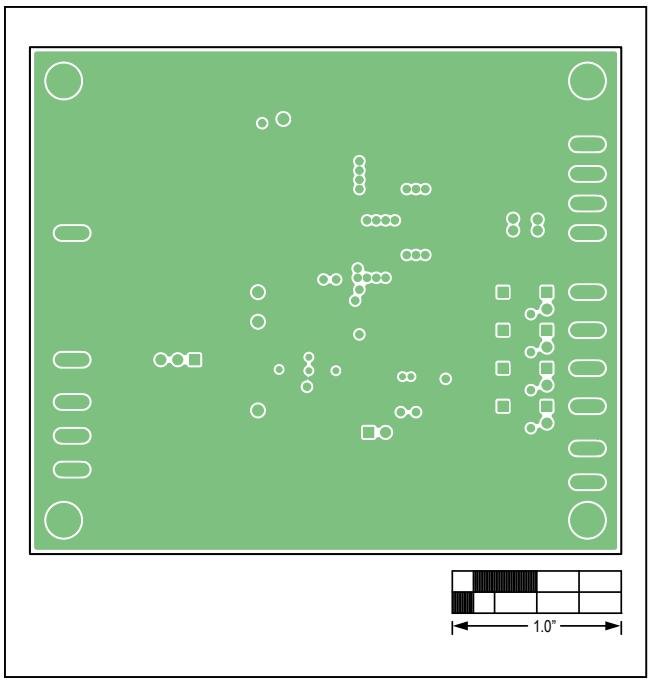

Figure 5. MAX16813 EV Kit PCB Layout—PGND Layer 3

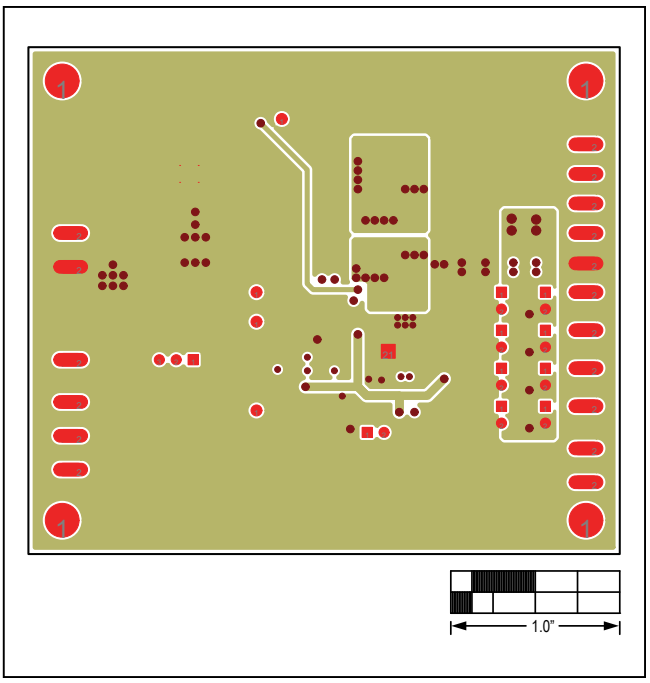

Figure 6. MAX16813 EV Kit PCB Layout—VCC and PGND Solder Side

Ordering Information

PART	TYPE
MAX16813EVKIT#	EV Kit

#Denotes RoHS compliant.

Revision History

REVISION NUMBER	REVISION DATE	DESCRIPTION	PAGES CHANGED
0	8/13	Initial release	—
1	12/17	Added MAX16813B as a new part that can be evaluated by the MAX16813 EV kit	1–10

For pricing, delivery, and ordering information, please contact Maxim Direct at 1-888-629-4642, or visit Maxim Integrated's website at www.maximintegrated.com.

Maxim Integrated cannot assume responsibility for use of any circuitry other than circuitry entirely embodied in a Maxim Integrated product. No circuit patent licenses are implied. Maxim Integrated reserves the right to change the circuitry and specifications without notice at any time.