EVALUATION KIT AVAILABLE

*Click **here** to ask an associate for production status of specific part numbers.*

MAX17220–MAX17225

400mV to 5.5V Input, nanoPower Synchronous Boost Converters with True Shutdown

General Description

The MAX17220–MAX17225 is a family of ultra-low quiescent current boost (step-up) DC-DC converters with a 225mA/0.5A/1A peak inductor current limit and True Shutdown™. True Shutdown disconnects the output from the input with no forward or reverse current. The output voltage is selectable using a single standard 1% resistor. The 225mA (MAX17220/MAX17221), 500mA (MAX17222/MAX17223), and 1A (MAX17224/MAX17225) peak inductor current limits allow flexibility when choosing inductors. The MAX17220/MAX17222/MAX17224 versions have post-startup enable transient protection (ETP), allowing the output to remain regulated for input voltages down to 400mV, depending on load current. The MAX17220–MAX17225 offer ultra-low quiescent current, small total solution size, and high efficiency throughout the entire load range. The MAX17220–MAX17225 are ideal for battery applications where long battery life is a must.

Applications

- Optical Heart-Rate Monitoring (OHRM) LED Drivers
- Supercapacitor Backup for Real-Time Clock (RTC)/ Alarm Buzzers
- Primary-Cell Portable Systems
- Tiny, Low-Power IoT Sensors
- Secondary-Cell Portable Systems
- Wearable Devices
- Battery-Powered Medical Equipment
- Low-Power Wireless Communication Products

Benefits and Features

- 300nA Quiescent Supply Current into OUT
- True Shutdown Mode
  - 0.5nA Shutdown Current
  - Output Disconnects from Input
  - No Reverse Current with V_{OUT} 0V to 5V
- 95% Peak Efficiency
- 400mV to 5.5V Input Range
- 0.88V Minimum Startup Voltage
- 1.8V to 5V Output Voltage Range
  - 100mV/Step
  - Single 1% Resistor-Selectable Output
- 225mA, 500mA, and 1A Peak Inductor Current Limit
  - MAX17220/MAX17221: 225mA I_{LIM}
  - MAX17222/MAX17223: 500mA I_{LIM}
  - MAX17224/MAX17225: 1A I_{LIM}
- MAX17220/MAX17222/MAX17224 Enable Transient Protection (ETP)
- 2mm x 2mm, 6-Pin µDFN
- 0.88mm x 1.4mm, 6-Bump WLP (2 x 3, 0.4mm Pitch)

Typical Operating Circuit

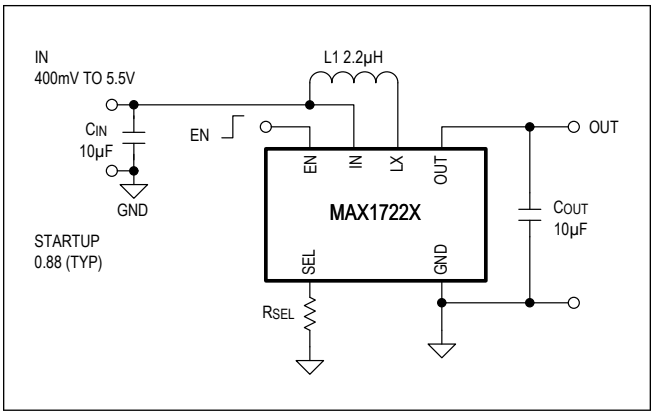

Arm and Cortex are registered trademarks of Arm Limited.
Bluetooth is a registered trademark of Bluetooth SIG, Inc.
True Shutdown is a trademark of Maxim Integrated Products, Inc.

***Ordering Information** appears at end of data sheet.*

19-8753; Rev 8; 10/21

© 2021 Analog Devices, Inc. All rights reserved. Trademarks and registered trademarks are the property of their respective owners.

One Analog Way, Wilmington, MA 01887 U.S.A. | Tel: 781.329.4700 | © 2021 Analog Devices, Inc. All rights reserved.

Absolute Maximum Ratings

OUT, EN, IN to GND ..... -0.3V to +6V
R_{SEL} to GND ..... -0.3V to Lower of (V_{OUT} + 0.3V) or +6V
LX RMS Current WLP ..... -1.6A_{RMS} to 1.6A_{RMS}
LX RMS Current µDFN ..... -1A_{RMS} to +1A_{RMS}
LX to GND (*Note 1*) ..... -0.3V to V_{OUT} + 0.3V
Continuous Power Dissipation (T_A = +70°C)
WLP (derate 10.5mW/°C above +70°C) 840mW
Continuous Power Dissipation (T_A = +70°C)
µDFN (derate 4.5mW/°C above +70°C) 357.8mW
Operating Temperature Range ..... -40°C to +125°C
Junction Temperature ..... +150°C
Storage Temperature Range ..... -40°C to +150°C
Soldering Temperature (reflow) ..... +260°C

Note 1: The LX pin has internal clamps to GND and OUT. These diodes may be forward biased during switching transitions. During these transitions, the maximum LX current should be within the maximum RMS current rating for safe operation.

Stresses beyond those listed under "Absolute Maximum Ratings" may cause permanent damage to the device. These are stress ratings only, and functional operation of the device at these or any other conditions beyond those indicated in the operational sections of the specifications is not implied. Exposure to absolute maximum rating conditions for extended periods may affect device reliability.

Package Information

µDFN

Package Code	L622+1C
Outline Number	21-0164
Land Pattern Number	90-0004
THERMAL RESISTANCE, FOUR-LAYER BOARD	
Junction to Ambient (θ_{JA})	223.6°C/W
Junction to Case (θ_{JC})	122°C/W

WLP

Package Code	N60E1+1
Outline Number	21-100128
Land Pattern Number	*Refer to Application Note 1891*
THERMAL RESISTANCE, FOUR-LAYER BOARD	
Junction to Ambient (θ_{JA})	95.15°C/W
Junction to Case (θ_{JC})	N/A

For the latest package outline information and land patterns (footprints), go to *www.maximintegrated.com/packages*. Note that a "+", "#", or "-" in the package code indicates RoHS status only. Package drawings may show a different suffix character, but the drawing pertains to the package regardless of RoHS status.

Package thermal resistances were obtained using the method described in JEDEC specification JESD51-7, using a four-layer board. For detailed information on package thermal considerations, refer to *www.maximintegrated.com/thermal-tutorial*.

Electrical Characteristics

(V_{IN} = V_{EN} = 1.5V, V_{OUT} = 3V, T_A = -40°C to +125°C, typical values are at T_A = +25°C, unless otherwise noted. (Note 2))

PARAMETER	SYMBOL	CONDITIONS		MIN	TYP	MAX	UNITS
Minimum Input Voltage	V_{IN_MIN}	Runs from output after startup, I_{OUT} = 1mA			400		mV
Input Voltage Range	V_{IN}	Guaranteed by LX Maximum On-Time		0.95		5.5	V
Minimum Startup Input Voltage	$V_{IN_STARTUP}$	R_L ≥ 3kΩ, Typical Operating Circuit, T_A = +25°C			0.88	0.95	V
Output Voltage Range	V_{OUT}	See R_{SEL} Selection Table. For V_{IN} < V_{OUT} target (Note 3)		1.8		5	V
Output Accuracy, LPM	ACC_{LPM}	V_{OUT} falling, when LX switching frequency is > 1MHz (Note 4)		-1.5		+1.5	%
Output Accuracy, Ultra-Low-Power Mode	ACC_{ULPM}	V_{OUT} falling, when LX switching frequency is > 1kHz (Note 5)		1	2.5	4	%
Quiescent Supply Current Into OUT	I_{Q_OUT}	MAX17220/2/4 EN = open after startup, MAX17221/3/5 EN = V_{IN}, not switching, RSEL OPEN, V_{OUT} = 104% of 1.8V	T_A= +25°C.		300	600	nA
			T_A = +85°C		470	900	
		MAX17220/2/4 EN = open after startup MAX17221/3/5 EN = V_{IN}, not switching, RSEL OPEN, V_{OUT} = 104% of 1.8V	T_A = +125°C		1000	2000	
Quiescent Supply Current Into IN	I_{Q_IN}	V_{OUT} = 104% of 1.8V,	T_A = +25°C		0.1		nA
Total Quiescent Supply Current into IN, LX, EN	$I_{Q_IN_TOTAL}$	MAX17220/2/4 EN = Open after startup. MAX17221/3/5 EN = V_{IN}, not switching, V_{OUT} = 104% of 1.8V, total current includes IN, LX, and EN, T_A = +25°C			0.5	100	nA
Shutdown Current Into IN	I_{SD_IN}	MAX17220/1/2/3/4/5, R_L = 3kΩ, V_{OUT} = V_{EN} = 0V, T_A = +25°C			0.1		nA
Total Shutdown Current into IN, LX	I_{SD_TOTAL}	MAX17220/1/2/3/4/5, R_L= 3kΩ, V_{EN} = 0V, T_A = +25°C			0.5	100	nA
Inductor Peak Current Limit	I_{PEAK}	(Note 6)	MAX17220/1	180	225	270	mA
			MAX17222/3	0.4	0.5	0.575	A
			MAX17224/5	0.8	1	1.2	
LX Maximum Duty Cycle	DC	(Note 7)		70	75		%
LX Maximum On-Time	t_{ON}	(Note 7)	V_{OUT} = 1.8V	280	365	450	ns
			V_{OUT} = 3.0V	270	300	330	
LX Minimum Off-Time	t_{OFF}	(Note 7)	V_{OUT} = 1.8V	90	120	150	ns
			V_{OUT} = 3.0V	80	100	120	

Electrical Characteristics (continued)

(V_{IN} = V_{EN} = 1.5V, V_{OUT} = 3V, T_A = -40°C to +125°C, typical values are at T_A = +25°C, unless otherwise noted. (Note 2))

PARAMETER	SYMBOL	CONDITIONS		MIN	TYP	MAX	UNITS
LX Leakage Current	I_{LX_LEAK}	V_{OUT} = V_{EN} = 0V, MAX17220	V_{LX} = 1.5V, T_A = +25°C		0.3		nA
			V_{LX} = 5.5V, T_A= +85°C		30		
			V_{LX} = 5.5V, T_A= +125°C		400		
N-Channel On-Resistance	$R_{DS(ON)}$	V_{OUT} = 3.3V	MAX17220/1		124	270	mΩ
			MAX17222/3		62	135	
			MAX17224/5		31	70	
P-Channel On-Resistance	$R_{DS(ON)}$	V_{OUT} = 3.3V	MAX17220/1		300	600	mΩ
			MAX17222/3		150	300	
			MAX17224/5		75	150	
Synchronous Rectifier Zero-Crossing as Percent of Peak Current Limit	I_{ZX}	V_{OUT} = 3.3V (Note 8)		2.5	5	7.5	%
Enable Voltage Threshold	V_{IL}	When LX switching stops, EN falling, T_A = -40°C to +85°C		250	500		mV
		When LX switching stops, EN falling, T_A = -40°C to +125°C		150			
	V_{IH}	EN rising, T_A = -40°C to +85°C			600	850	
		EN rising, T_A = -40°C to +125°C				900	
Enable Input Leakage	I_{EN_LK}	MAX17221/3/5, V_{EN} = 5.5V, T_A = +25°C			0.1		nA
		MAX17220/2/4, V_{EN} = 0V, T_A= +25°C			0.1		
Enable Input Impedance		MAX17220/2/4			100	200	kΩ
Required Select Resistor Accuracy	R_{SEL}	Use the nearest ±1% resistor from R_{SEL} Selection Table		-1		+1	%
Select Resistor Detection Time	t_{RSEL}	V_{OUT} = 1.8V, C_{RSEL} < 2pF (Note 9)		360	600	1320	µs

Note 2: Limits are 100% production tested at T_A = +25°C. Limits over the operating temperature range are guaranteed through correlation using statistical quality control (SQC) methods.

Note 3: Guaranteed by the Required Select Resistor Accuracy parameter.

Note 4: Output Accuracy, Low Power mode is the regulation accuracy window expected when I_{OUT} > I_{OUT} TRANSITION. See PFM Control Scheme and V_{OUT} ERROR vs I_{LOAD} TOC for more details. This accuracy does not include load, line, or ripple.

Note 5: Output Accuracy, Ultra-Low Power mode is the regulation accuracy window expected when I_{OUT} < I_{OUT} TRANSITION. See PFM Control Scheme and V_{OUT} ERROR vs. I_{LOAD} TOC for more details. This accuracy does not include load, line, or ripple.

Note 6: This is a static measurement. See I_{LIM} vs. V_{IN} TOC. The actual peak current limit depends upon V_{IN} and L due to propagation delays.

Note 7: Guaranteed by measuring LX frequency and duty cycle.

Note 8: This is a static measurement.

Note 9: This is the time required to determine R_{SEL} value. This time adds to the startup time. See the Output Voltage Selection section.

Typical Operating Characteristics

(MAX17222ELT+, IN = 1.5V, OUT = 3V, L = 2.2µH Coilcraft® XFL4020-222, C_{IN} = 10µF, C_{OUT} = 10µF, T_A = +25°C, unless otherwise noted.)

TOTAL SYSTEM SHUTDOWN CURRENT vs. TEMPERATURE

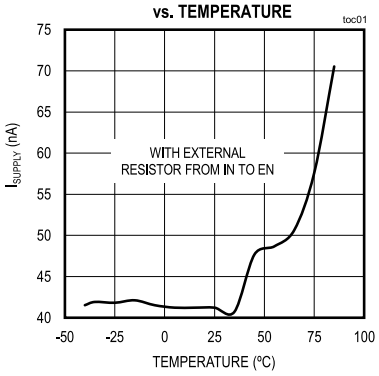

TOTAL SYSTEM SUPPLY CURRENT vs. TEMPERATURE

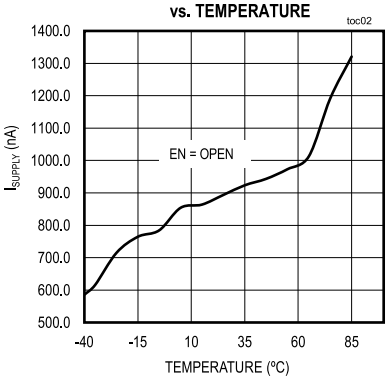

MAXIMUM OUTPUT CURRENT vs. INPUT VOLTAGE

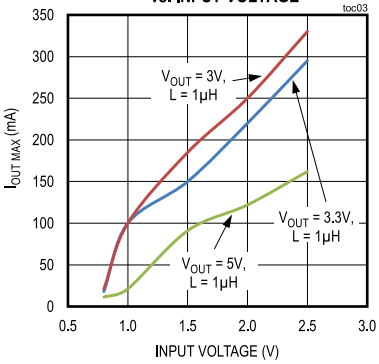

MAXIMUM OUTPUT CURRENT vs. INPUT VOLTAGE

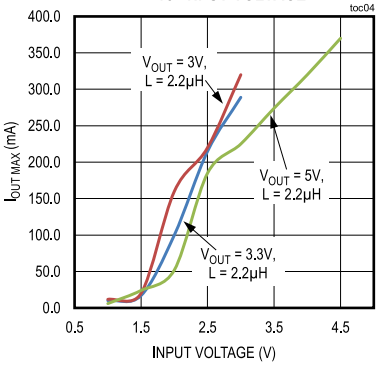

MAX17222ELT+ INDUCTOR CURRENT LIMIT vs. INPUT VOLTAGE

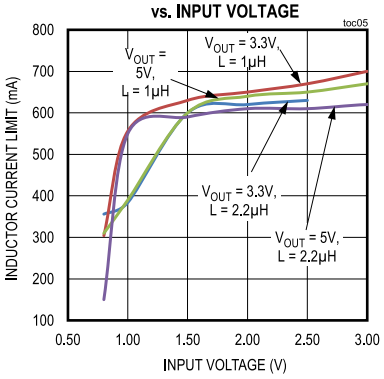

OUTPUT VOLTAGE ERROR vs. LOAD CURRENT (V_{OUT} = 3.3V)

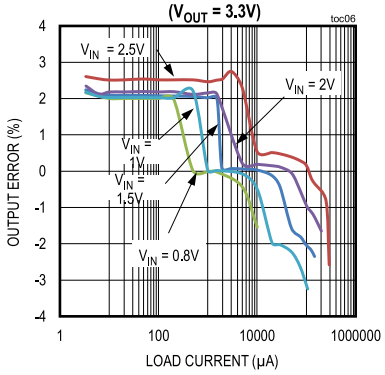

EFFICIENCY vs. LOAD CURRENT (V_{OUT} = 3.3V)

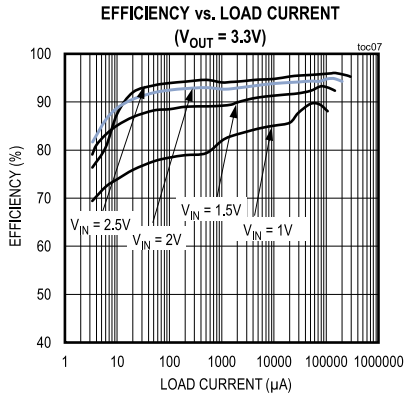

STARTUP VOLTAGE vs. LOAD CURRENT (V_{OUT} = 3.3V)

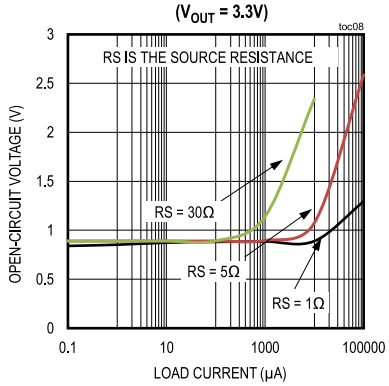

SWITCHING FREQUENCY vs. LOAD CURRENT

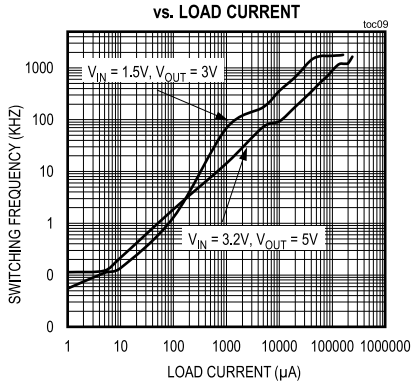

Typical Operating Characteristics (continued)

(MAX17222ELT+, IN = 1.5V, OUT = 3V, L = 2.2µH Coilcraft® XFL4020-222, C_{IN} = 10µF, C_{OUT} = 10µF, T_A = +25°C, unless otherwise noted.)

INTO AND OUT OF ULPM LOAD TRANSIENT

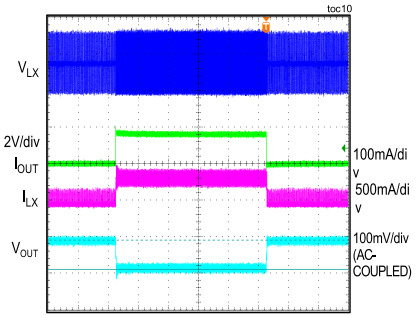

V_{IN} = 1.5V, V_{OUT} = 3V, I_{OUT} = 0 TO 180mA
200µs/div

INTO AND OUT OF LPM LOAD TRANSIENT

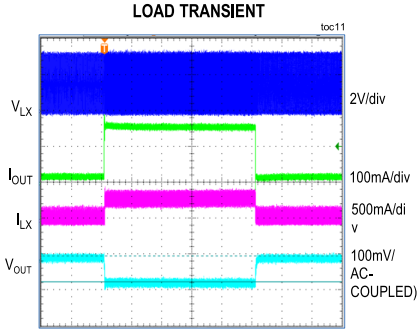

V_{IN} = 1.5V, V_{OUT} = 3V, I_{OUT} = 10mA TO 180mA
200µs/div

STARTUP

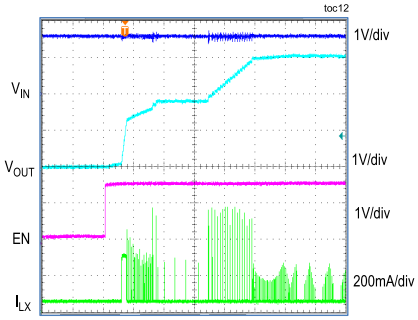

V_{IN} = 1.5V, V_{OUT} = 3V, I_{OUT} = 3K
400µs/div

POWER-DOWN

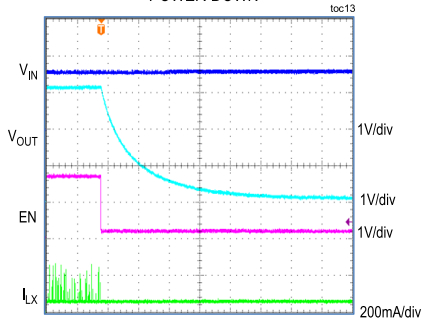

V_{IN} = 1.5V, V_{OUT} = 3V, I_{OUT} = 3K
20ms/div

HEAVY LOAD SWITCHING WAVEFORM

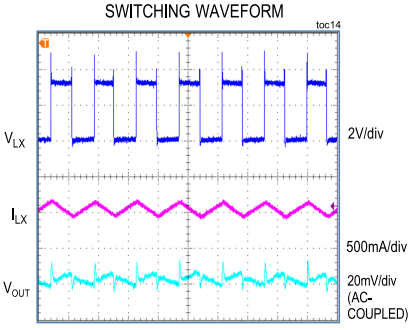

V_{IN} = 1.5V, V_{OUT} = 3V, I_{OUT} = 160mA
400ns/div

LIGHT LOAD SWITCHING WAVEFORM

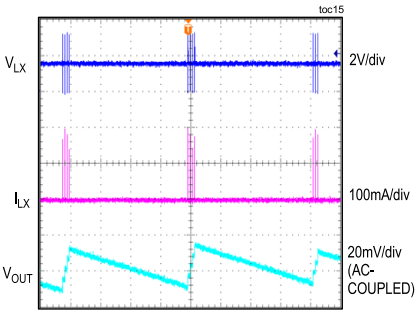

V_{IN} = 1.5V, V_{OUT} = 3V, I_{OUT} = 100µA
200µs/div

ULTRA-LOW-POWER MODE SWITCHING WAVEFORM

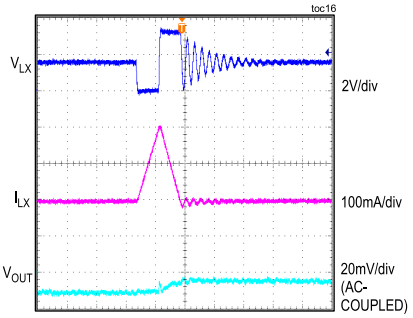

V_{IN} = 1.5V, V_{OUT} = 3V, I_{OUT} = 1µA
400ns/div

LINE TRANSIENT

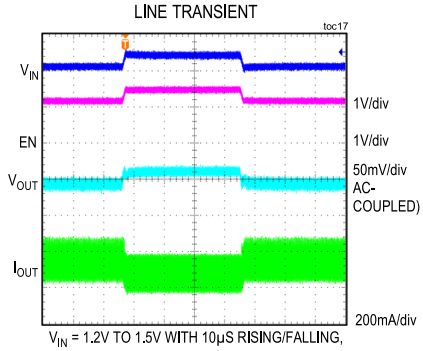

V_{IN} = 1.2V TO 1.5V WITH 10µS RISING/FALLING,
V_{OUT} = 3V, I_{OUT} = 100mA
100µs/div

MAX17220ENT+ INDUCTOR CURRENT LIMIT vs. INPUT VOLTAGE

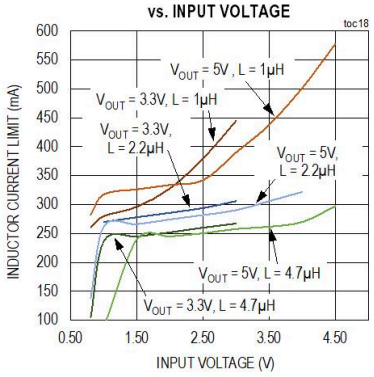

Pin Configurations

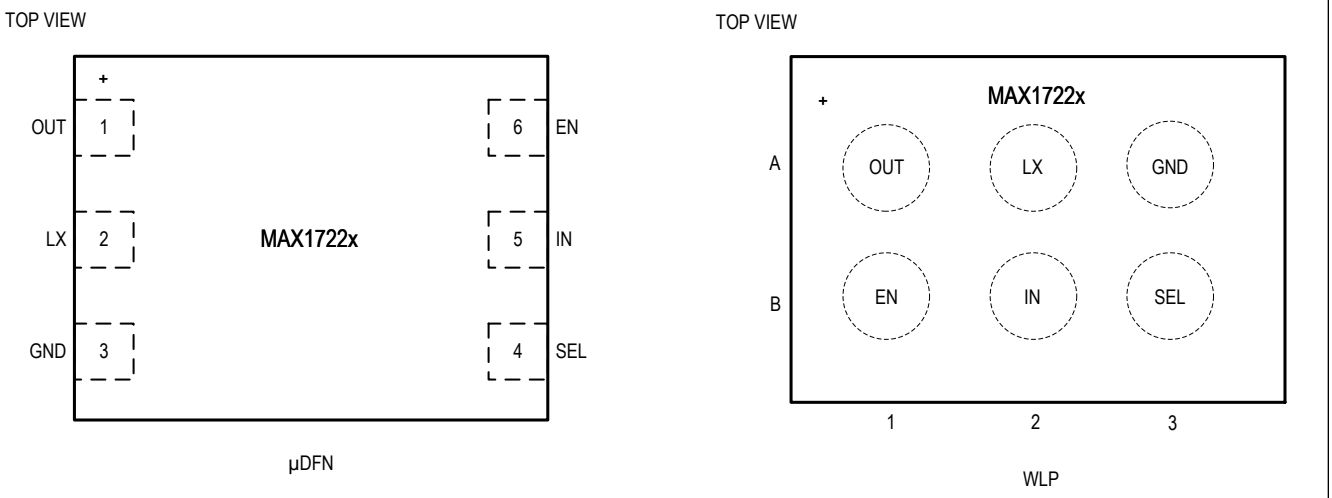

Pin Description

PIN		NAME	FUNCTION
6 WLP	µDFN		
A1	1	OUT	Output Pin. Connect a 10µF X5R ceramic capacitor (minimum 2µF capacitance) to ground.
A2	2	LX	Switching Node Pin. Connect the inductor from IN to LX.
A3	3	GND	Ground Pin.
B1	6	EN	Active-High Enable Input. See *Supply Current* section for recommended connections.
B2	5	IN	Input Pin. Connect a 10µF X5R ceramic capacitor (minimum 2µF capacitance) to ground. Depending on the application requirements, more capacitance may be needed (i.e., Bluetooth® LE).
B3	4	SEL	Output Voltage Select Pin. Connect a resistor from SEL to GND based on the desired output voltage. See the *R_{SEL} Selection Table*.

Functional Diagram

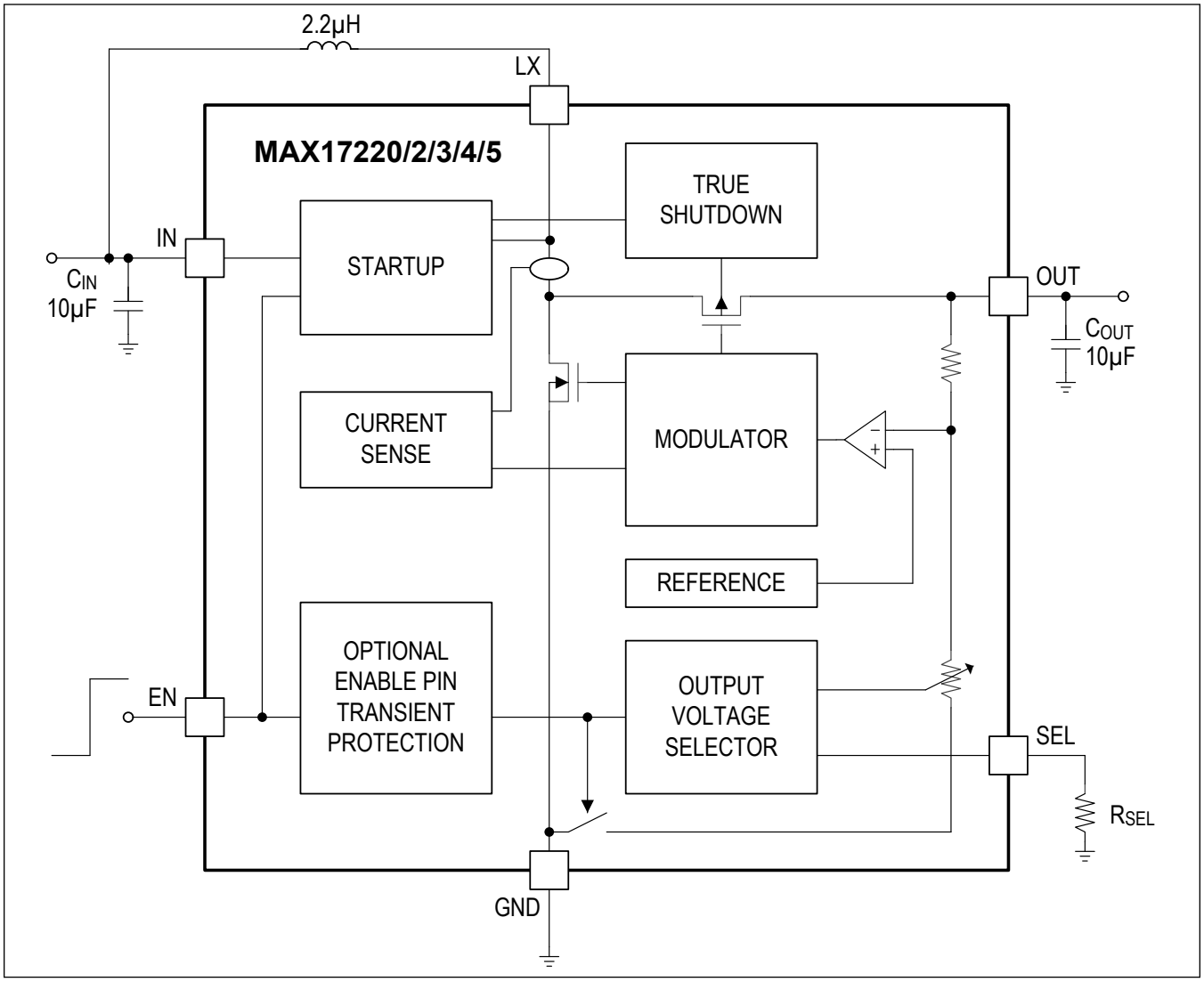

Detailed Description

The MAX17220–MAX17225 compact, high-efficiency, step-up DC-DC converters have ultra-low quiescent current, are guaranteed to start up with voltages as low as 0.95V, and operate with an input voltage down to 400mV, depending on load current. True Shutdown disconnects the input from the output, saving precious battery life. Every detail of the MAX17220–MAX17225 was carefully chosen to allow for the lowest power and smallest solution size. Such details as switching frequencies up to 2.5MHz, tiny package options, a single-output setting resistor, 300ns fixed turn-on time, as well as three current limit options, allow the user to minimize the total solution size.

Supply Current

True Shutdown Current

The total system shutdown current ($I_{SD_TOTAL_SYSTEM}$) is made up of the MAX17220–MAX17225 total shutdown current (I_{SD_TOTAL}) and the current through an external pullup resistor, as shown in Figure 1 I_{SD_TOTAL} is listed in the *Electrical Characteristics* table and is typically 0.5nA. It is important to note that I_{SD_TOTAL} includes LX and IN leakage currents. (See the Shutdown Supply Current vs. Temperature graph in the *Typical Operating Characteristics* section.) $I_{SD_TOTAL_SYSTEM}$ current can be calculated using the formula below. For example, for the MAX17220–MAX17225 with EN connected to an open-drain GPIO of a microcontroller, a V_{IN} = 1.5V, V_{OUT} = 3V, and a 33MΩ pullup resistor, $I_{SD_TOTAL_SYSTEM}$ current is 45.9nA.

$$I_{SD_TOTAL_SYSTEM} = I_{SD_TOTAL} + \frac{V_{IN}}{R_{PULLUP}} = 0.5nA + \frac{1.5}{33M\Omega} = 45.9nA$$

(Figure 1)

Figure 2 shows a typical connection of the MAX17221/MAX17223/MAX17225 to a push-pull microcontroller GPIO. $I_{SD_TOTAL_SYSTEM}$ current can be calculated using the formula below. For example, a MAX17221/MAX17223/MAX17225 with EN connected to a push-pull microcontroller GPIO, V_{IN} = 1.5V, and V_{OUT} = 3V, $I_{SD_TOTAL_SYSTEM}$ current is 0.5nA.

$$I_{SD_TOTAL_SYSTEM} = I_{SD_TOTAL} = 0.5nA$$

(Figure 2, Figure 3)

Figure 3 shows a typical connection of the MAX17220/MAX17222/MAX17224 with a pushbutton switch to minimize the $I_{SD_TOTAL_SYSTEM}$ current. $I_{SD_TOTAL_SYSTEM}$ current can be calculated using the formula above. For example, a MAX17220/MAX17222/MAX17224 with EN connected as shown in Figure 3, with V_{IN} = 1.5V and V_{OUT} = 3V, the $I_{SD_TOTAL_SYSTEM}$ current is 0.5nA.

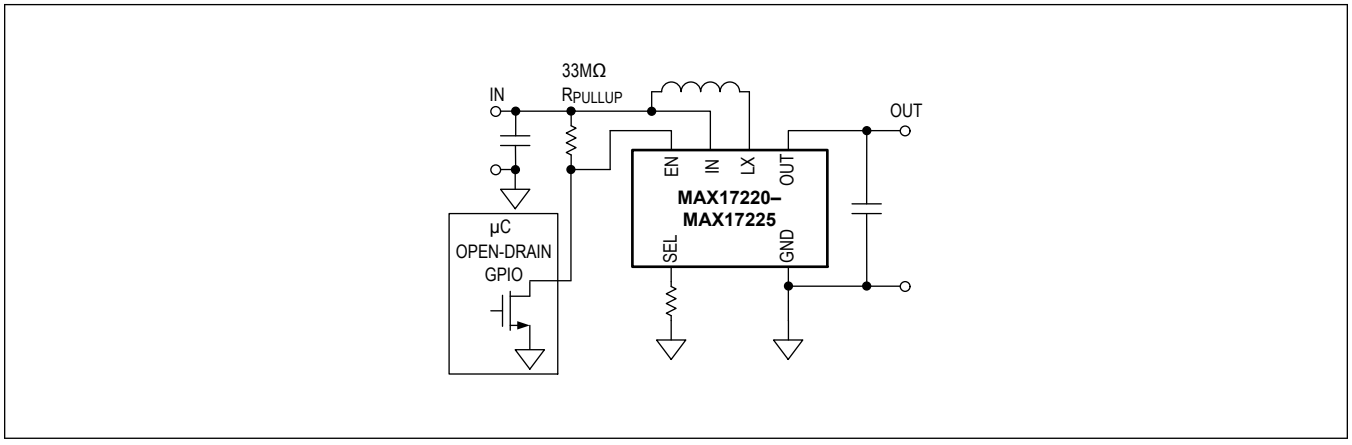

Figure 1. For All Versions, EN Pin Can Be Driven by an Open-Drain Microcontroller GPIO.

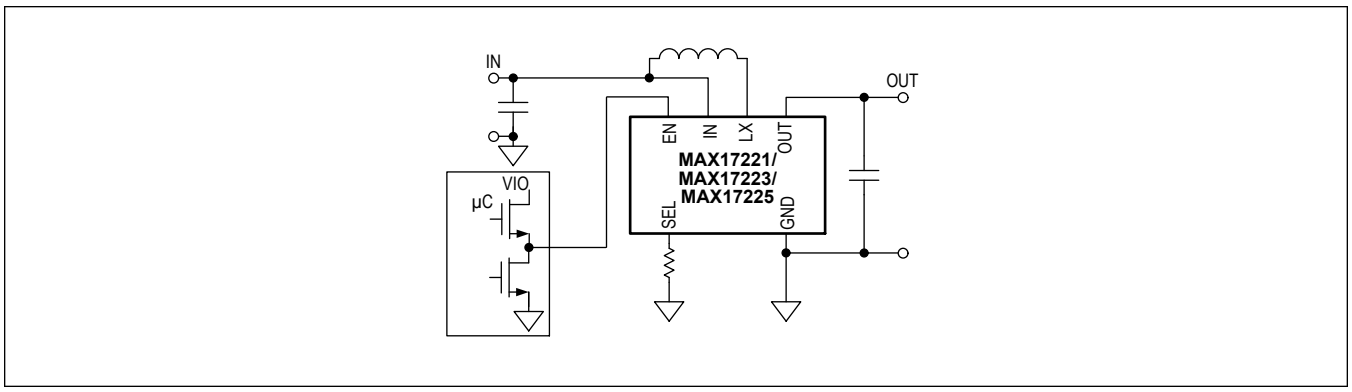

Figure 2. Only the MAX17221/MAX17223/MAX17225 EN Pin Can Be Driven by a Push-Pull Microcontroller GPIO.

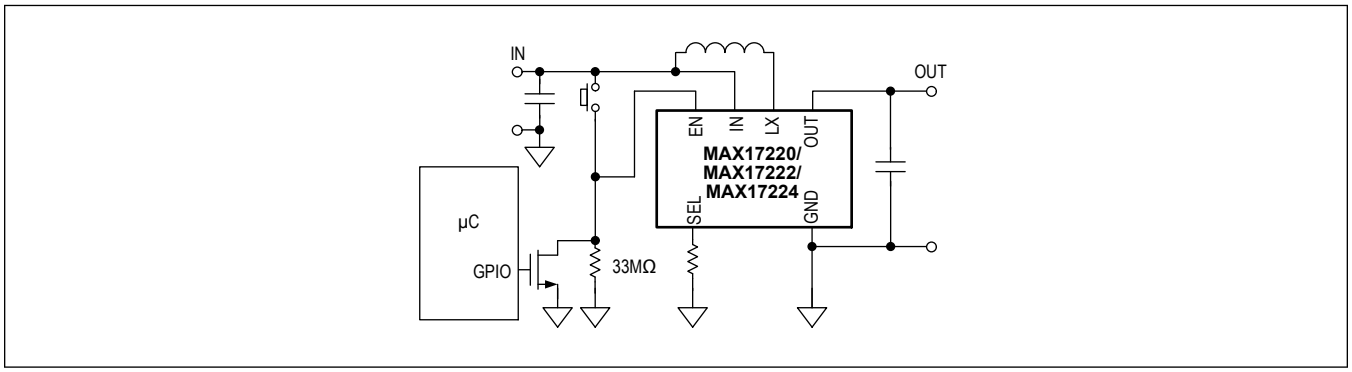

Figure 3. The MAX17220/MAX17222/MAX17224 Total System Shutdown Current Will Only Be Leakage if Able to Use Pushbutton as Shown.

Enable Transient Protection (ETP) Current

The MAX17220/MAX17222/MAX17224 have internal circuitry that helps protect against accidental shutdown by transients on the EN pin. Once the part is started up, these parts allow the voltage at IN to drop as low as 400mV while still keeping the part enabled, depending on the load current. This feature comes at the cost of slightly higher supply current that is dependent on the pullup resistor resistance. The extra supply current for this protection option can be calculated by the equation below. For example, for the MAX17220/MAX17222/MAX17224 used in the Figure 1 connection, a V_{IN} = 1.5V, V_{OUT} = 3V, a 33MΩ pullup resistor and an 85% efficiency, the IQ_ETP is expected to be 61.3nA.

$$IQ_ETP = \frac{(V_{OUT} - V_{IN})}{(R_{PULLUP} + 100K)} \times \left(\frac{1}{\eta} \times \frac{V_{OUT}}{V_{IN}} - 1\right)$$

(Figure 1)

$$IQ_ETP = \frac{(3V - 1.5V)}{(33M + 100K)} \times \left(\frac{1}{0.85} \times \frac{3V}{1.5} - 1\right) = 61.3nA$$

(Figure 1)

Use the efficiency η from the flat portion of the efficiency typical operating curves while the device is in ultra-low-power mode (ULPM). See the *PFM Control Scheme* section for more info on ULPM. Do not use the efficiency for your actual load current. If you are using the versions of the part without enable input transient protection (using MAX17221/MAX17223/MAX17225), or if you are using any part version and the electrical path from the EN pin is opened after startup, then there is no IQ_ETP current and it will be zero.

$$IQ_ETP = N/A = 0$$

(Figure 2)

$$IQ_ETP = \frac{(V_{OUT})}{(R_{PULLUP} + 100K)} \times (\frac{1}{\eta} \times \frac{V_{OUT}}{V_{IN}})$$

(Figure 3)

$$IQ_ETP = \frac{(3V)}{(33M + 100K)} \times (\frac{1}{0.85} \times \frac{3V}{1.5V}) = 213.2nA$$

(Figure 3)

Quiescent Current

The MAX17221–MAX17225 has ultra-low quiescent current and was designed to operate at low input voltages by bootstrapping itself from its output by drawing current from the output. Use the equation below to calculate the total system quiescent current IQ_TOTAL_SYSTEM using the efficiency η from the flat portion of the efficiency graph in the *Typical Operating Characteristics* section while the device is in ULPM. See the PFM control scheme section for more info on ULPM. Do not use the efficiency for your actual load current. To calculate the IQ_ETP for the MAX17220/MAX17222/MAX17224, see the *Enable Transient Protection (ETP) Current* section. If you are using the versions of the part without enable input transient protection (using the MAX17221/MAX17223/MAX17225) or if you are using any part version and the electrical path from the EN pin is opened after startup, then the IQ_ETP current will be zero. For example, for the MAX17221/MAX17223/MAX17225, V_{IN} = 1.5V, V_{OUT} = 3V, and an 85% efficiency, the IQ_TOTAL_SYSTEM is 706.4nA.

$$IQ_TOTAL_SYSTEM = IQ_IN_TOTAL + \frac{IQ_OUT}{\eta \times (\frac{V_{IN}}{V_{OUT}})}$$

(MAX17221/3/5)

$$IQ_TOTAL_SYSTEM = 0.5nA + \frac{300nA}{0.85 \times (\frac{1.5V}{3V})} = 706.4nA$$

(MAX17221/3/5)

$$IQ_TOTAL_SYSTEM = IQ_IN_TOTAL + \frac{IQ_OUT}{\eta \times (\frac{V_{IN}}{V_{OUT}})} + IQ_ETP$$

(MAX17220/2/4)

(MAX17220/2/4)

$$IQ_TOTAL_SYSTEM = 0.5nA + \frac{300nA}{0.85 \times (\frac{1.5V}{3V})} + 61.3nA = 767.7nA$$

(MAX17220/2/4)

PFM Control Scheme

The MAX17221–MAX17225 utilizes a fixed on-time, current-limited, pulse-frequency-modulation (PFM) control scheme that allows ultra-low quiescent current and high efficiency over a wide output current range. The inductor current is limited by the 0.225A/0.5A/1A N-channel current limit or by the 300ns switch maximum on-time. During each on cycle, either the maximum on-time or the maximum current limit is reached before the off-time of the cycle begins. The MAX17221–MAX17225 PFM control scheme allows for both continuous conduction mode (CCM) or discontinuous conduction mode (DCM). When the error comparator senses that the output has fallen below the regulation threshold, another cycle begins. See the MAX17221–MAX17225 simplified *Functional Diagram*.

The MAX17221–MAX17225 automatically switches between the ULPM, low-power mode (LPM) and high-power mode (HPM), depending on the load current. Figure 4 and Figure 5 show typical waveforms while in each mode. The output voltage, by design, is biased 2.5% higher while in ULPM so that it can more easily weather a future large load transient. ULPM is used when the system is in standby or an ultra-low-power state. LPM and HPM are useful for sensitive sensor measurements or during wireless communications for medium output currents and large output currents respectively. The user can calculate the value of the load current where ULPM transitions to LPM using the equation below. For example, for V_{IN} = 1.5V, V_{OUT} = 3V, and L = 2.2µH, the UPLM to LPM transition current happens at approximately 1.49mA and

a no-load frequency of 11.5Hz. The MAX17221–MAX17225 enters HPM when the inductor current transitions from DCM to CCM.

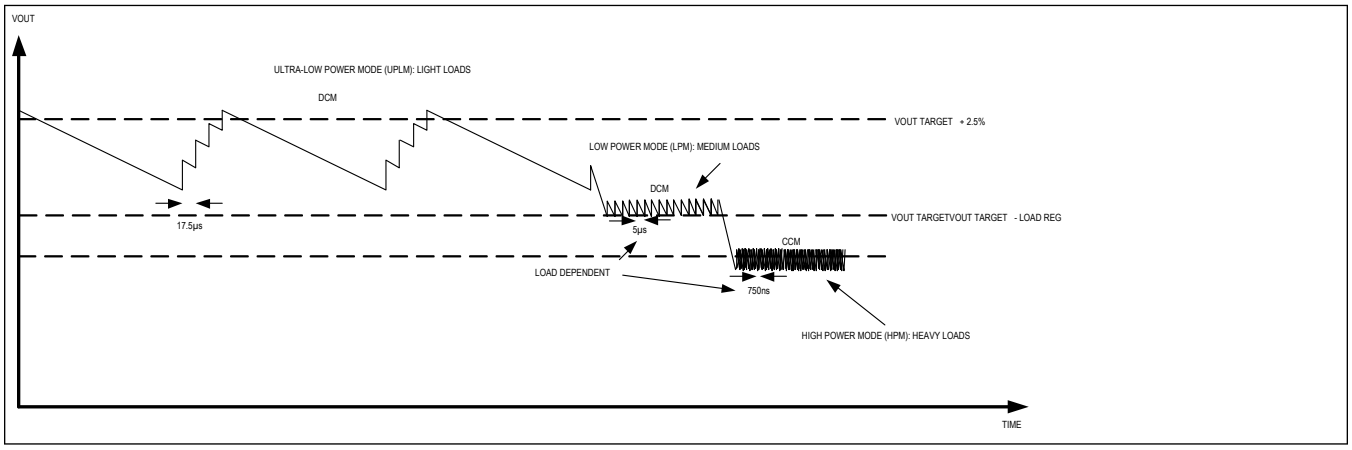

Figure 4. ULPM, LPM, and HPM Waveforms (Part 1)

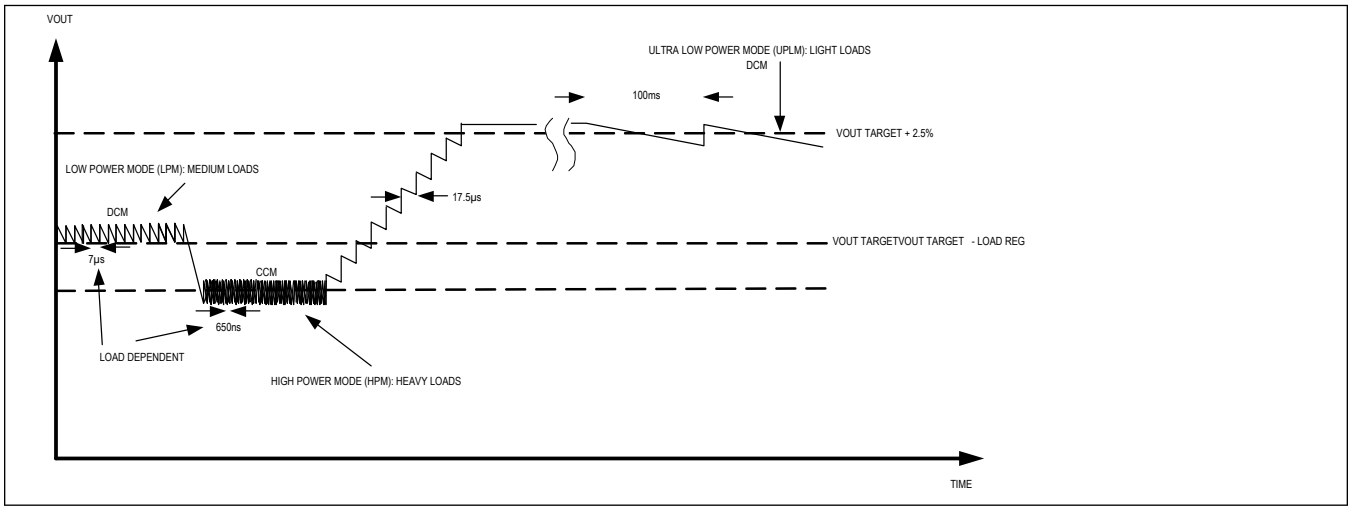

Figure 5. ULPM, LPM, and HPM Waveforms (Part 2)

$$IOUT_TRANSITION = \left(\frac{300ns^2}{2L}\right) \times \left(\frac{V_{IN}}{\frac{V_{OUT}}{V_{IN}} - 1}\right) \times \left(\frac{\eta}{17.5\mu s}\right)$$

$$= \left(\frac{300ns^2}{2 \times 2.2\mu H}\right) \times \left(\frac{1,5V}{\frac{3V}{1.5V} - 1}\right) \times \left(\frac{0.85}{17.5\mu s}\right) = 1.49mA$$

The minimum switching frequency can be calculated by the following equation:

$$f_{SW(MIN)} = \frac{1}{17.5\mu s} \times \frac{IQ}{IOUT_TRANSITION}$$

$$f_{SW(MIN)} = \frac{1}{17.5\mu s} \times \frac{300nA}{1.49mA} = 11.5Hz$$

Operation with $V_{IN} > V_{OUT}$

If the input voltage (V_{IN}) is greater than the output voltage (V_{OUT}) by a diode drop (V_{DIODE} varies from ~0.2V at light load to ~0.7V at heavy load), then the output voltage is clamped to a diode drop below the input voltage (i.e., $V_{OUT} = V_{IN} - V_{DIODE}$).

When the input voltage is closer to the output voltage target (i.e., V_{OUT} target + $V_{DIODE} > V_{IN} > V_{OUT}$ target) the MAX17220–MAX17225 operate like a buck converter.

Hot Plugging

The MAX17221–MAX17225 will initiate a controlled soft-start in the event that a supply voltage is reapplied at a high dV/dt rate; for example, during installation of a fresh battery. While in regulation, if V_{IN} steps abruptly above V_{OUT} for more than 1V (typ), the device will reset. Output voltage droop in this case will be a function of the load current, output capacitance, and time required for soft-start to complete, which is 1.5ms (typ).

Design Procedure

Output Voltage Selection

The MAX17221–MAX17225 has a unique single-resistor output selection method known as R_{SEL}, as shown in Figure 6. At startup, the MAX17221–MAX17225 uses up to 200µA only during the select resistor detection time, typically for 600µs, to read the R_{SEL} value. R_{SEL} has many benefits, which include lower cost and smaller size, since only one resistor is needed versus the two resistors needed in typical feedback connections. Another benefit is that R_{SEL} allows our customers to stock just one part in their inventory system and use it in multiple projects with different output voltages just by changing a single standard 1% resistor. Lastly, R_{SEL} eliminates wasting current continuously through feedback resistors for ultra-low-power battery-operated products. Select the R_{SEL} resistor value by choosing the desired output voltage in the *R_{SEL} Selection Table*.

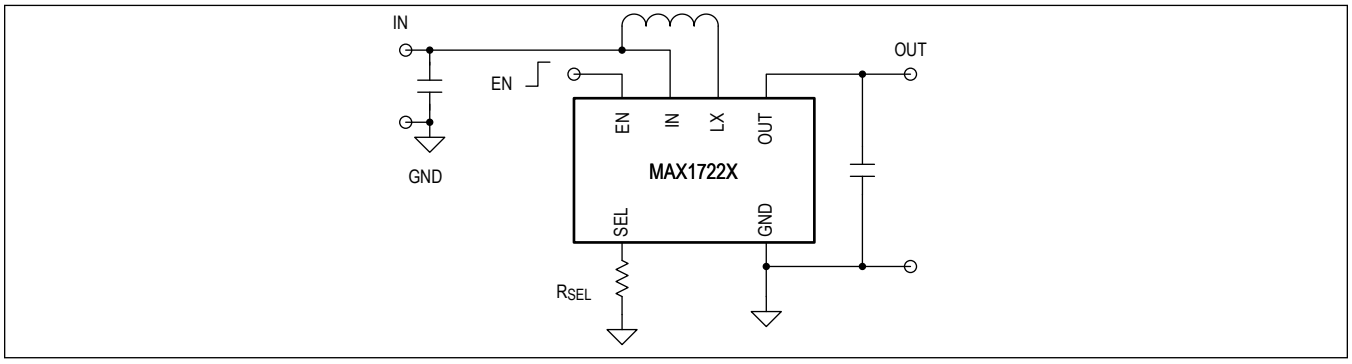

Figure 6. Single R_{SEL} Resistor Sets the Output Voltage

R_{SEL} Selection Table

V_{OUT} (V)	STD RES 1% (kΩ)
1.8	OPEN
1.9	909
2.0	768
2.1	634
2.2	536
2.3	452
2.4	383
2.5	324
2.6	267

2.7	226
2.8	191
2.9	162
3.0	133
3.1	113
3.2	95.3
3.3	80.6
3.4	66.5
3.5	56.2
3.6	47.5
3.7	40.2
3.8	34
3.9	28
4.0	23.7
4.1	20
4.2	16.9
4.3	14
4.4	11.8
4.5	10
4.6	8.45
4.7	7.15
4.8	5.9
4.9	4.99
5.0	SHORT

Inductor Selection

A 2.2µH inductor value provides the best size and efficiency tradeoff in most applications. Smaller inductance values typically allow for the smallest physical size, and larger inductance values allow for more output current assuming CCM is achieved. Most applications are expected to use 2.2µH, as shown in the example circuits. For low input voltages, 1µH will work best. If one of the example application circuits does not provide enough output current, use the equations below to calculate a larger inductance value that meets the output current requirements, assuming it is possible to achieve. For the equations below, choose an I_{IN} between 0.9 x I_{LIM} and half I_{LIM}. It is not recommended to use an inductor value smaller than 1µH or larger than 4.7µH. See the *Typical Operating Characteristics* section for choosing the value of efficiency η using the closest conditions for your application. An example calculation has been provided for the MAX17222 that has I_{LIM} = 500mA, V_{IN} (min) = 1.8V, V_{OUT} = 3V, and a desired I_{OUT} of 205mA, which is beyond one of the 2.2µH example circuits. The result shows that the inductor value can be changed to 3.3µH to achieve a little more output current.

$$I_{IN} = \frac{V_{OUT} \times I_{OUT}}{\eta \times V_{IN}} = \frac{3V \times 205mA}{0.85 \times 1.8V} = 402mA$$

$$\frac{I_{LIM}}{2} < I_{IN} < 0.9 \times I_{LIM}$$

$$\Delta I = (I_{LIM} - I_{IN}) \times 2 = (500mA - 402mA) \times 2 = 196mA$$

$$L_{MIN} = \frac{V_{IN} \times t_{ON(MAX)}}{\Delta I} = \frac{1.8V \times 300ns}{196mA} = 2.76\mu H$$

$$= > 3.3\mu H \text{ closest standard value}$$

Capacitor Selection

Input capacitors reduce current peaks from the battery and increase efficiency. For the input capacitor, choose a ceramic capacitor because they have the lowest equivalent series resistance (ESR), smallest size, and lowest cost. Choose an acceptable dielectric such as X5R or X7R. Other capacitor types can be used as well but will have larger ESR. The biggest downside of ceramic capacitors is their capacitance drop with higher DC bias and, because of this, at minimum a standard 10µF ceramic capacitor is recommended at the input for most applications. The minimum recommended capacitance (not capacitor) at the input is 2µF for most applications. For applications that use batteries that have a high source impedance greater than 1Ω, more capacitance may be needed. A good starting point is to use the same capacitance value at the input as for the output.

The minimum output capacitance that ensures stability is 2µF. At minimum, a standard 10µF X5R (or X7R) ceramic capacitor is recommended for most applications. Due to DC bias effects, the actual capacitance can be 80% lower than the nominal capacitor value. The output ripple can be calculated with the following equation. For example, for the MAX17220 and MAX17222–MAX17225 with V_{IN} = 1.5V, V_{OUT} = 3V, an effective capacitance of 5µF, and a capacitor ESR of 4mΩ, the expected ripple is 7mV.

$$V_RIPPLE = IL_PEAK \times ESR_COUT + \frac{1}{2} IL_PEAK \times t_{OFF} \times \frac{1}{C_{OUT(effective)}}$$

Where,

$$IL_PEAK = \frac{V_{IN}}{L} \times t_{ON} = \frac{1.5V}{2.2\mu H} \times 300ns = 204mA$$

$$t_{OFF} = t_{ON}[\frac{V_{IN}}{V_{OUT} - V_{IN}}] = 300ns \times [\frac{1.5V}{3V - 1.5V}] = 300ns$$

C_{OUT} (effective) = 5µF, ESR_COUT for Murata GRM155R61A106ME44 is 4mΩ from 200kHz to 2MHz.

$$V_RIPPLE = 204mA \times 4m\Omega + \frac{1}{2} \times 204mA \times 300ns \times \frac{1}{5\mu F} = 7mV$$

PCB Layout Guidelines

Careful PC board layout is especially important in nanocurrent DC-DC converters. In general, minimize trace lengths to reduce parasitic capacitance, parasitic resistance, and radiated noise. Remember that every square of 1oz copper will result in 0.5mΩ of parasitic resistance. The connection from the bottom of the output capacitor and the ground pin of the device must be extremely short, as should be that of the input capacitor. Keep the main power path from IN, LX, OUT, and GND as tight and short as possible. Minimize the surface area used for LX since this is the noisiest node. Lastly, the trace used for R_{SEL} should not be too long nor produce a capacitance of more than a few picofarads.

Applications Information

Primary Cell Bluetooth Low Energy (Bluetooth LE) Temperature Sensor Wearable

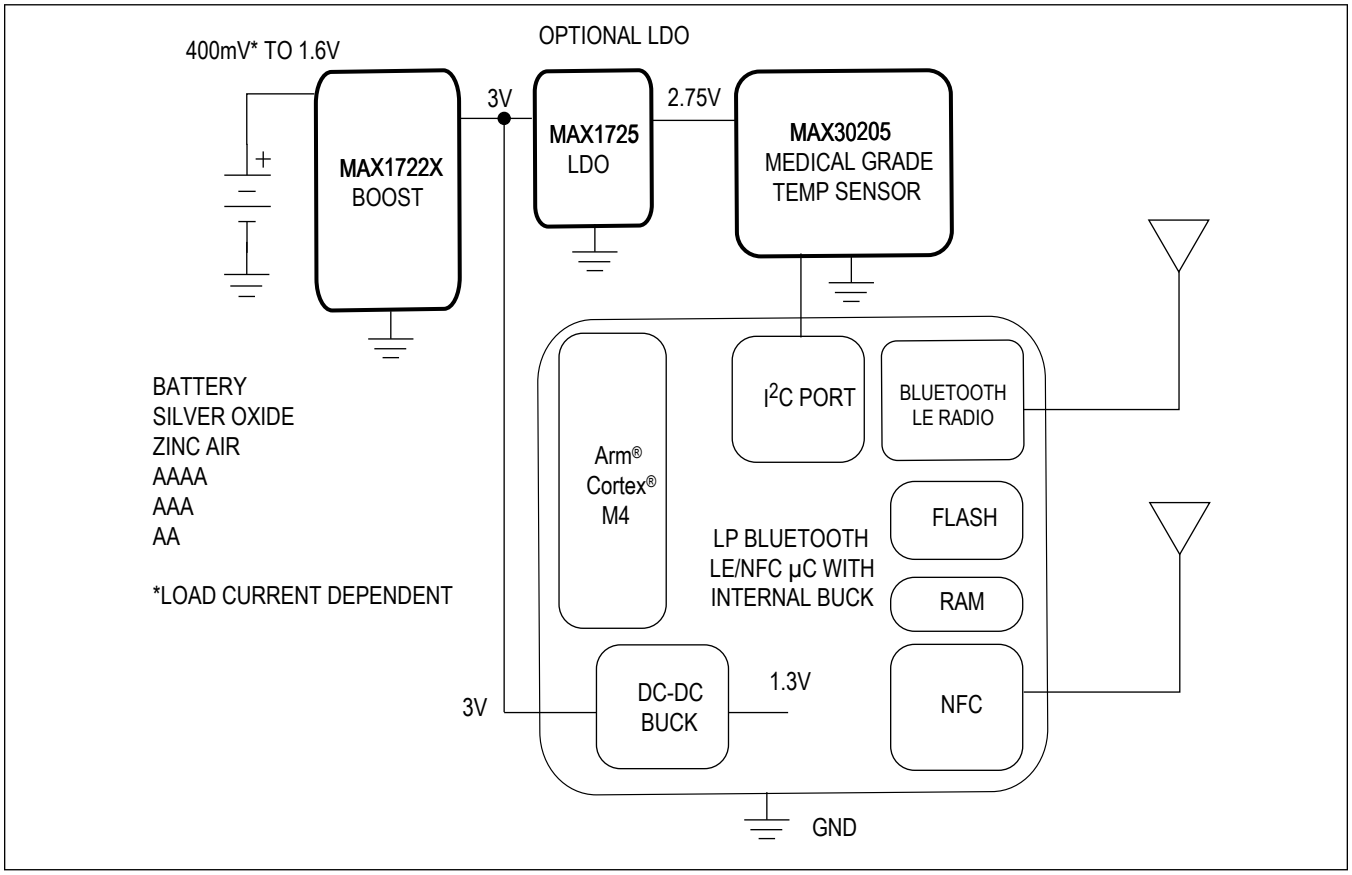

Figure 7. MAX1722x/MAX30205 Temperature Sensor Wearable Solution

Primary Cell Bluetooth LE Optical Heart Rate Monitoring (OHRM) Sensor Wearable

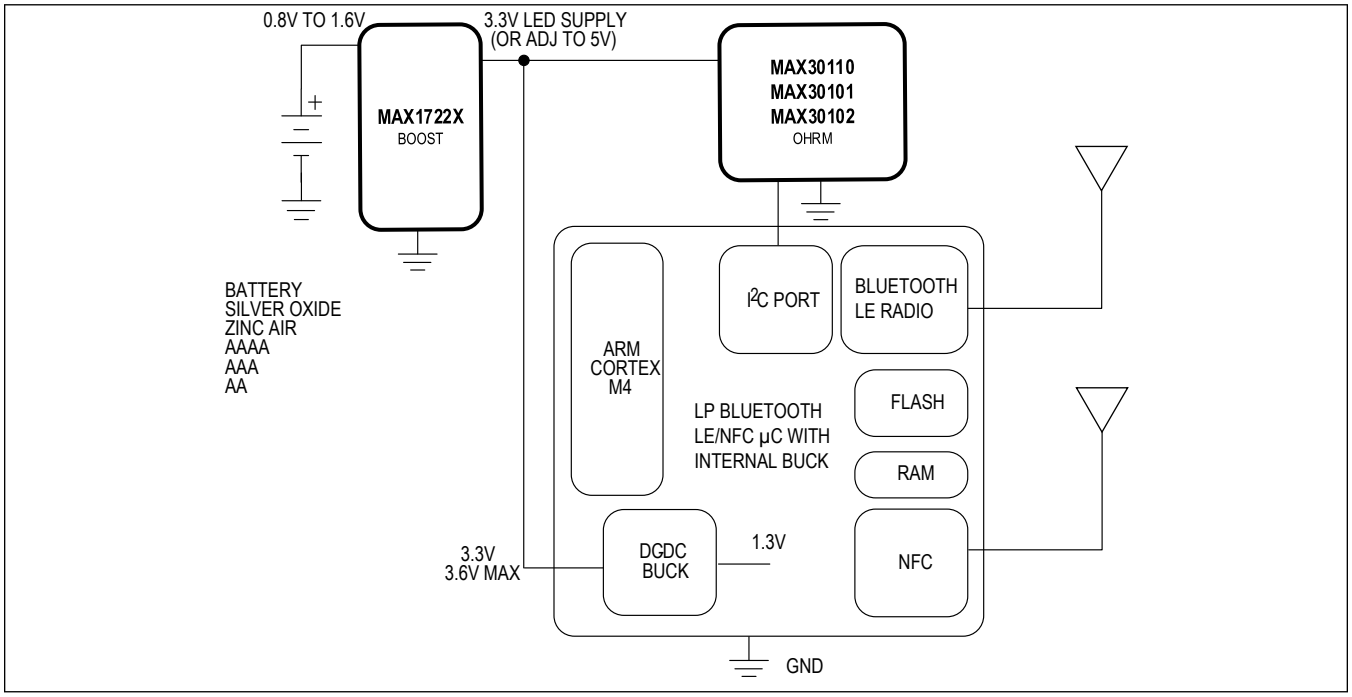

Figure 8. MAX1722x/MAX30110/MAX30101/MAX30102 Optical Heart Rate Monitor (OHRM) Sensor Wearable Solution for Primary Cells

Secondary Rechargeable Lithium Cell Bluetooth LE Optical Heart Rate Monitor (OHRM) Sensor Wearable

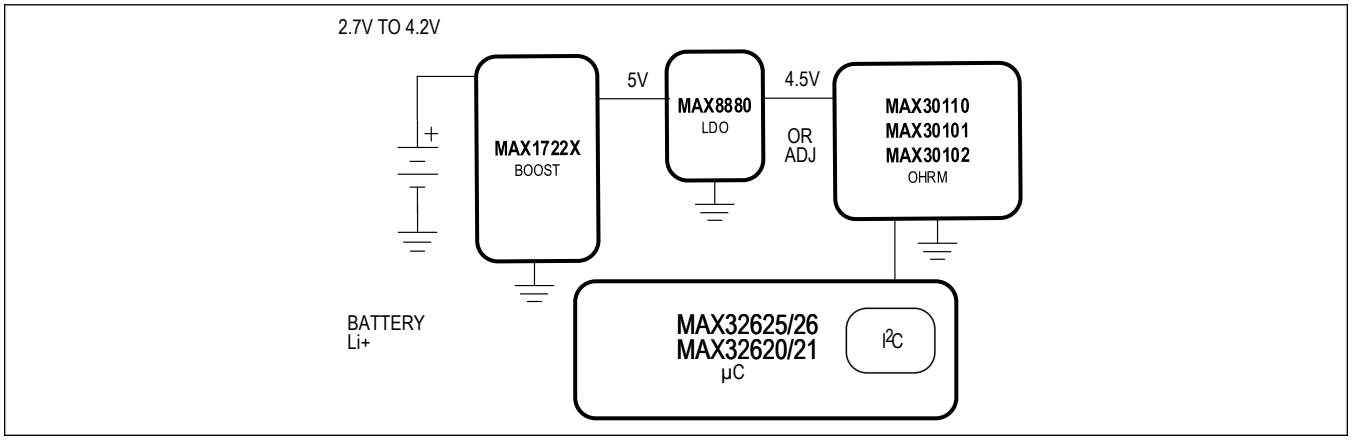

Figure 9. MAX1722x/MAX30110/MAX30101/MAX30102 Optical Heart Rate Monitor (OHRM) Sensor Wearable Solution for Secondary Cells

Supercapacitor Backup Solution for RTC Preservation

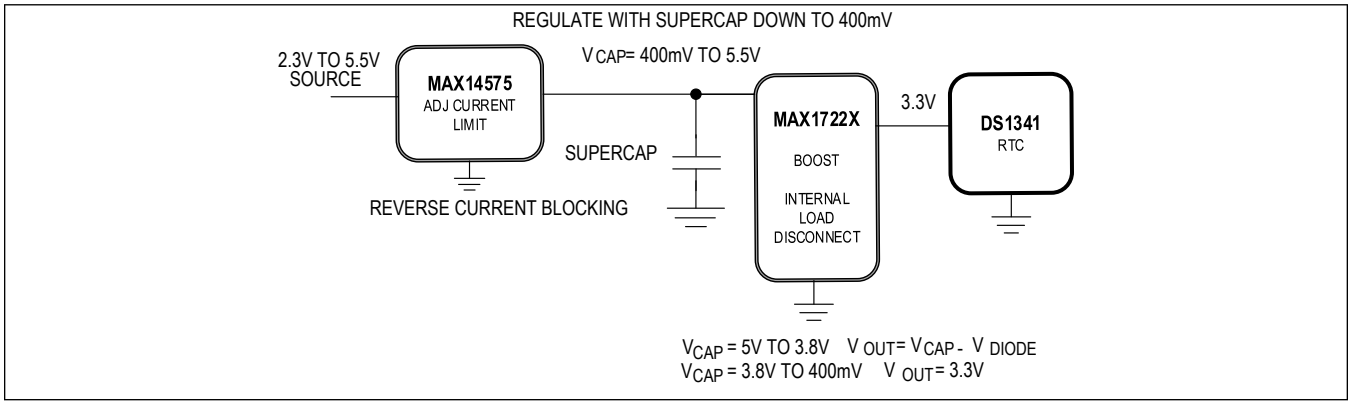

Figure 10. MAX1722x/MAX14575/DS1341 RTC Backup Solution

Supercapacitor Backup Solution to Maintain Uniform Sound for Alarm Beeper Buzzers

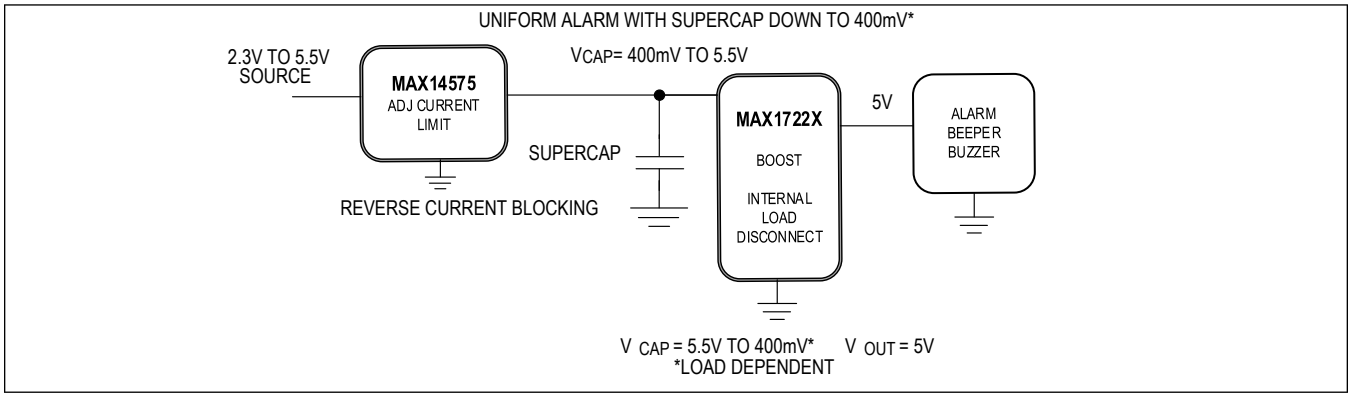

Figure 11. MAX1722x/MAX14575 Solution for Alarm Beeper Buzzers

Zero Reverse Current in True Shutdown for Multisource Applications

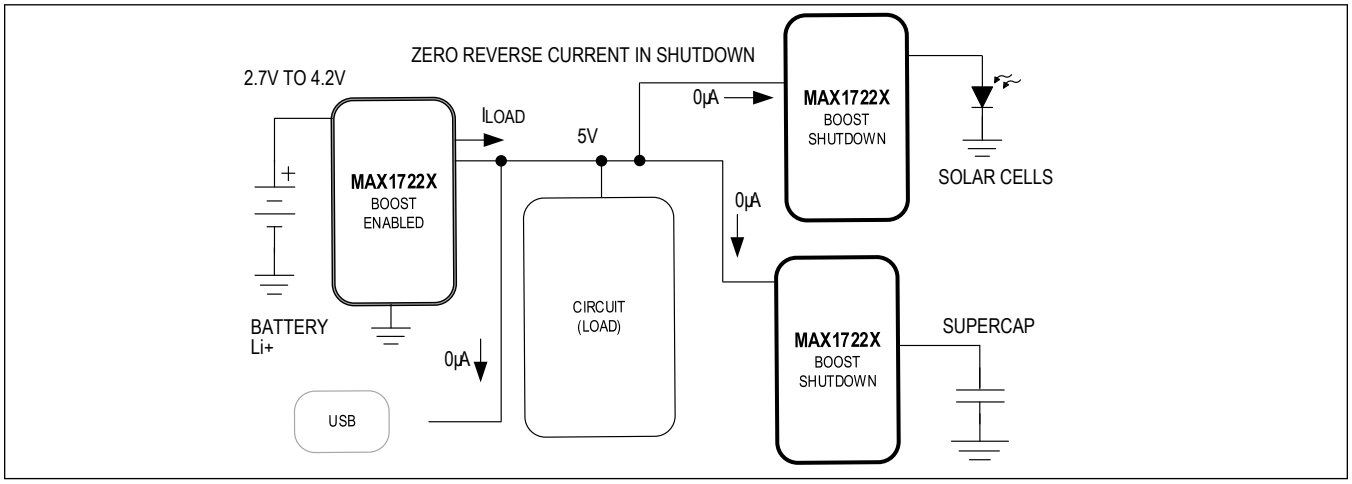

Figure 12. MAX1722x Has Zero Reverse Current in True Shutdown

Typical Application Circuits

Smallest Solution Size—0603 Inductor—MAX17222/MAX17223 500mA I_{LIM} (Part 1)

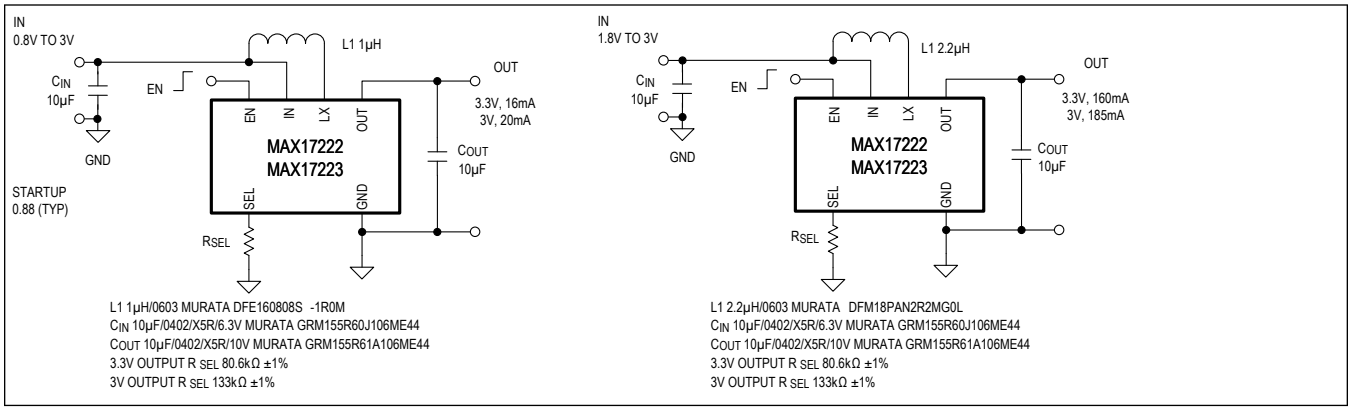

Typical Application Circuits (continued)

Smallest Solution Size—0603 Inductor—MAX17222/MAX17223 500mA I_{LIM} (Part 2)

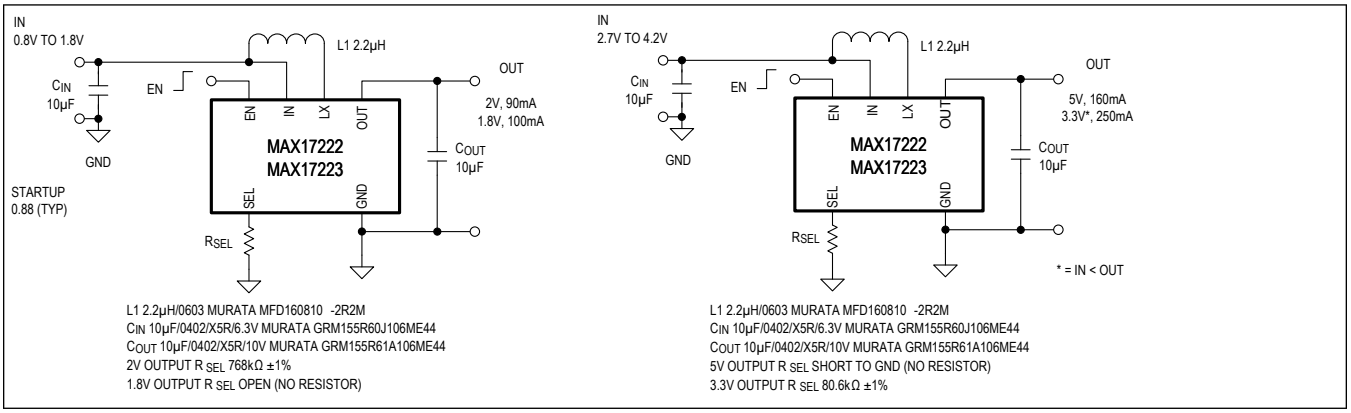

Highest Efficiency Solution—4mm x 4mm Inductor—MAX17222/MAX17223 500mA I_{LIM} (Part 1)

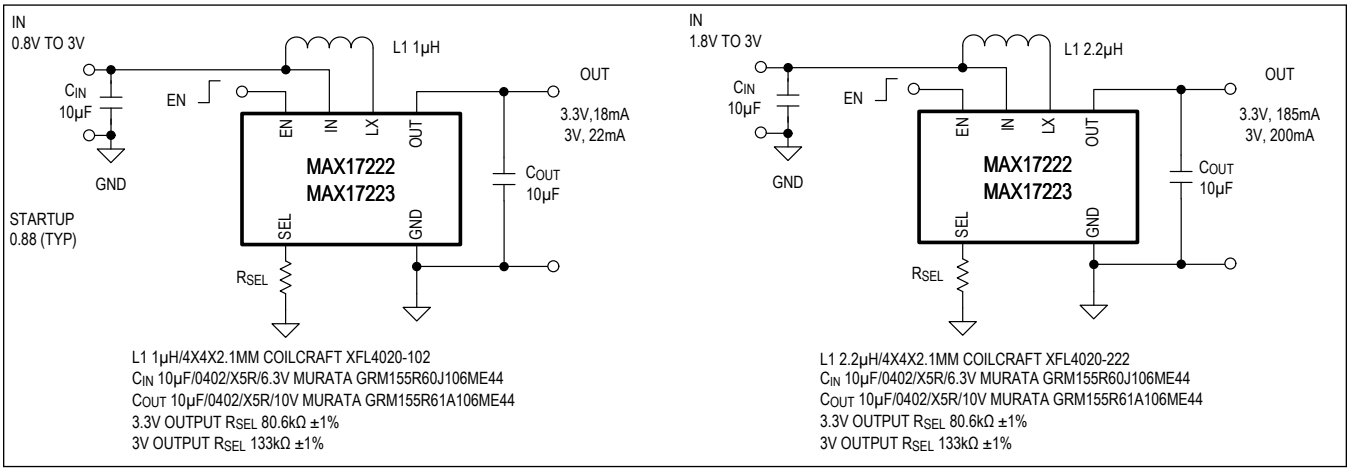

Highest Efficiency Solution—4mm x 4mm Inductor—MAX17222/MAX17223 500mA I_{LIM} (Part 2)

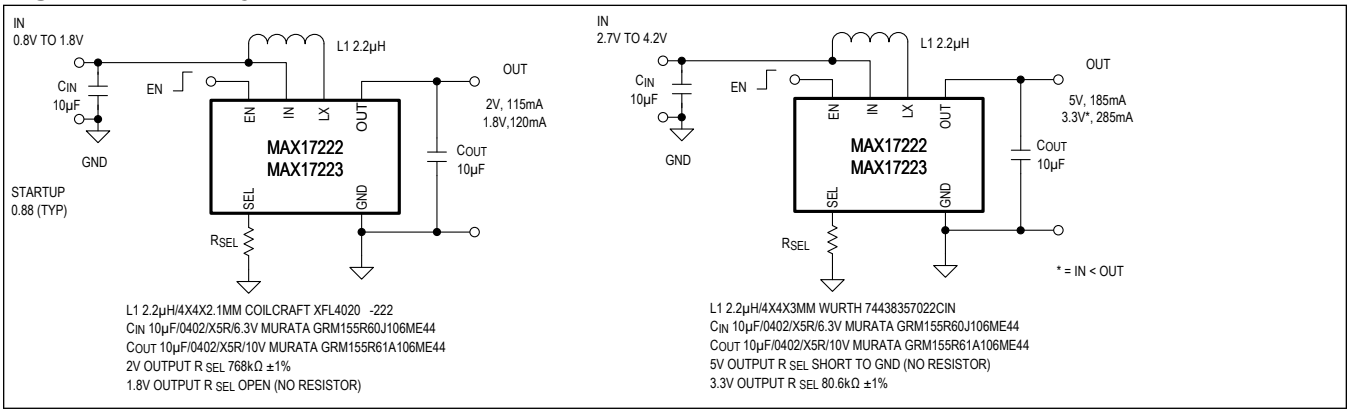

Ordering Information

PART NUMBER	TEMPERATURE RANGE	PIN-PACKAGE	INPUT PEAK CURRENT IPEAK	TRUE SHUTDOWN	ENABLE TRANSIENT PROTECTION (ETP)
MAX17220ENT+	-40°C to +85°C	6 WLP	225mA	Yes	Yes
MAX17221ENT+	-40°C to +85°C	6 WLP	225mA	Yes	No
MAX17222ENT+	-40°C to +85°C	6 WLP	0.5A	Yes	Yes
MAX17223ENT+	-40°C to +85°C	6 WLP	0.5A	Yes	No
MAX17224ENT+	-40°C to +85°C	6 WLP	1A	Yes	Yes
MAX17225ENT+	-40°C to +85°C	6 WLP	1A	Yes	No
MAX17220ELT+	-40°C to +85°C	6 µDFN	225mA	Yes	Yes
MAX17221ELT+T	-40°C to +85°C	6 µDFN	225mA	Yes	No
MAX17221ELT+	-40°C to +85°C	6 µDFN	225mA	Yes	No
MAX17222ELT+	-40°C to +85°C	6 µDFN	0.5A	Yes	Yes
MAX17223ELT+	-40°C to +85°C	6 µDFN	0.5A	Yes	No
MAX17224ELT+	-40°C to +85°C	6 µDFN	1A	Yes	Yes
MAX17225ELT+	-40°C to +85°C	6 µDFN	1A	Yes	No
MAX17220ALT+	-40°C to +125°C	6 µDFN	225mA	Yes	Yes
MAX17222ALT+	-40°C to +125°C	6 µDFN	500mA	Yes	Yes
MAX17223ALT+	-40°C to +125°C	6 µDFN	500mA	Yes	No
MAX17224ALT+	-40°C to +125°C	6 µDFN	1A	Yes	Yes
MAX17225ALT+	-40°C to +125°C	6 µDFN	1A	Yes	No

+Denotes a lead(Pb)-free/RoHS-compliant package.

T = Tape and reel.

Revision History

REVISION NUMBER	REVISION DATE	DESCRIPTION	PAGES CHANGED
0	2/17	Initial release	—
1	4/17	Updated *Electrical Characteristics* and *Ordering Information* tables and added *Operation with V_{IN} > V_{OUT}* section	3, 8, 13, 19, 21
2	5/17	Removed MAX17221 part number, general data sheet updates	1–23
3	7/17	Updated Shutdown Current into IN and Total Shutdown Current into IN LX conditions, Note 5, TOC 5, True Shutdown Current section, Figure 10, added TOC 18, removed future product references (MAX17220ENT+, MAX17224ENT+, MAX17220ELT+, MAX17223ELT+, and MAX17224ELT+)	3–5, 7, 10, 18, 22
4	2/19	Updated *Absolute Maximum Ratings*, *Electrical Characteristics*, *Detailed Description*, and *Ordering Information*	2–4, 13, 22
5	12/19	Added MAX17221 part number to data sheet	1–23
6	10/20	Updated *Detailed Description*, *Ordering Information*	14, 15, 22
7	7/21	Updated *Absolute Maximum Ratings*	2
8	10/21	Updated *Electrical Characteristics* table	3

ANALOG DEVICES
www.analog.com

Information furnished by Analog Devices is believed to be accurate and reliable. However, no responsibility is assumed by Analog Devices for its use, nor for any infringements of patents or other rights of third parties that may result from its use. Specifications subject to change without notice. No license is granted by implication or otherwise under any patent or patent rights of Analog Devices. Trademarks andregistered trademarks are the property of their respective owners.