19-2099; Rev 0; 7/01

EVALUATION KIT AVAILABLE

MAXIM

Simple Current-Limited Switch-Mode Li+ Charger Controller

General Description

The low-cost MAX1873R/S/T provides all functions needed to simply and efficiently charge 2-, 3-, or 4-series lithium-ion cells at up to 4A or more. It provides a regulated charging current and voltage with less than ±0.75% total voltage error at the battery terminals. An external P-channel MOSFET operates in a step-down DC-DC configuration to efficiently charge batteries in low-cost designs.

The MAX1873R/S/T regulates the battery voltage and charging current using two control loops that work together to transition smoothly between voltage and current regulation. An additional control loop limits current drawn from the input source so that AC adapter size and cost can be minimized. An analog voltage output proportional to charging current is also supplied so that an ADC or microcontroller can monitor charging current.

The MAX1873 may also be used as an efficient current-limited source to charge NiCd or NiMH batteries in multichemistry charger designs. The MAX1873R/S/T is available in a space-saving 16-pin QSOP package. Use the evaluation kit (MAX1873EVKIT) to help reduce design time.

Applications

Notebook Computers

Portable Internet Tablets

2-, 3-, or 4-cell Li+ Battery Pack Chargers

6-, 9-, or 10-cell Ni Battery Pack Chargers

Hand-Held Instruments

Portable Desktop Assistants (PDAs)

Desktop Cradle Chargers

Selector Guide

PART	SERIES CELLS TO CHARGE
MAX1873REEE	2-Cell Li+ or 5- or 6-cell Ni Battery
MAX1873SEEE	3-Cell Li+ or 7- or 9-cell Ni Battery
MAX1873TEEE	4-Cell Li+ 10-cell Ni Battery Packs

Pin Configuration appears at end of data sheet.

Features

- ♦ **Low-Cost and Simple Circuit**
- ♦ **Charges 2-, 3-, or 4-Series Lithium-Ion Cells**
- ♦ **AC Adapter Input-Current-Limit Loop**
- ♦ **Also Charges Ni-Based Batteries**
- ♦ **Analog Output Monitors Charge Current**
- ♦ **±0.75% Battery-Regulation Voltage**
- ♦ **5µA Shutdown Battery Current**
- ♦ **Input Voltage Up to 28V**
- ♦ **200mV Dropout Voltage/100% Duty Cycle**
- ♦ **Adjustable Charging Current**
- ♦ **300kHz PWM Oscillator Reduces Noise**
- ♦ **Space-Saving 16-Pin QSOP**
- ♦ **MAX1873 Evaluation Kit Available to Speed Designs**

Ordering Information

PART	TEMP. RANGE	PIN-PACKAGE
MAX1873REEE	-40°C to +85°C	16 QSOP
MAX1873SEEE	-40°C to +85°C	16 QSOP
MAX1873TEEE	-40°C to +85°C	16 QSOP

Typical Operating Circuit

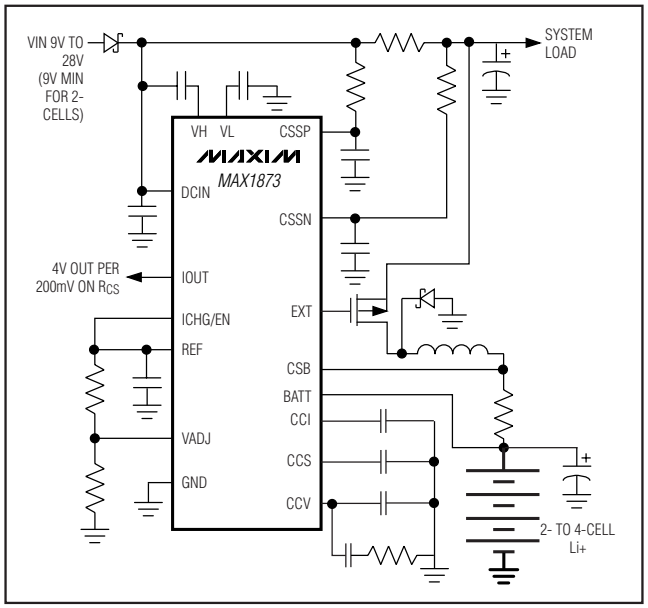

For pricing, delivery, and ordering information, please contact Maxim/Dallas Direct! at 1-888-629-4642, or visit Maxim's website at www.maxim-ic.com.

Simple Current-Limited Switch-Mode Li+ Charger Controller

ABSOLUTE MAXIMUM RATINGS

CSSP, CSSN, DCIN to GND .....-0.3V to +30V
VL, ICHG/EN to GND.....-0.3V to +6V
VH, EXT to DCIN.....-6V to +0.3V
VH, EXT to GND .....(V_{DCIN} + 0.3V) to -0.3V
EXT to VH .....+6V to -0.3V
DCIN to VL.....+30V to -0.3V
VADJ, REF, CCI, CCV, CCS, IOUT to GND.....-0.3V to (VL + 0.3V)
BATT, CSB to GND.....-0.3V to +20V
CSSP to CSSN.....-0.3V to +0.6V
CSB to BATT.....-0.3V to +0.6V
VL Source Current .....+50mA
VH Sink Current .....+40mA
Continuous Power Dissipation (T_A = +70°C)
16-Pin QSOP (derate 8.3mW/°C above +70°C).....+667mW
Operating Temperature Range
MAX1873_EEE.....-40°C to +85°C
Junction Temperature..... +150°C
Storage Temperature Range .....-65°C to +150°C
Lead Temperature (soldering, 10s) ..... +300°C

Stresses beyond those listed under "Absolute Maximum Ratings" may cause permanent damage to the device. These are stress ratings only, and functional operation of the device at these or any other conditions beyond those indicated in the operational sections of the specifications is not implied. Exposure to absolute maximum rating conditions for extended periods may affect device reliability.

ELECTRICAL CHARACTERISTICS

(Circuit of Figure 1, V_{DCIN} = V_{CSSP} = V_{CSSN} = 18V, $V_{ICHG/EN}$ = V_{REF}, V_{VADJ} = V_{REF}/2. MAX1873R: V_{BATT} = V_{CSB} = 8.4V; MAX1873S: V_{BATT} = V_{CSB} = 12.6V; MAX1873T: V_{BATT} = V_{CSB} = 16.8V; **T_A = 0°C to +85°C**. Typical values are at T_A = +25°C, unless otherwise noted.)

PARAMETER	CONDITIONS	MIN	TYP	MAX	UNITS
INPUT SUPPLY AND REFERENCE					
DCIN Input Voltage Range		6		28	V
DCIN Quiescent Supply Current	6.0V < V_{DCIN} < 28V		4	7	mA
	DCIN ≤ BATT		0.1	10	µA
DCIN to BATT Undervoltage Threshold	CSSP = DCIN, input falling	0.05		0.175	V
DCIN to BATT Undervoltage Threshold	CSSP = DCIN, input rising	0.22		0.38	V
VL Output Voltage	6.0V < V_{DCIN} < 28V	5.15	5.40	5.65	V
VL Output Load Regulation	I_{VL} = 0 to 3mA		15	50	mV
REF Output Voltage	I_{REF} = 21µA (200kΩ load)	4.179	4.20	4.221	V
REF Line Regulation	6.0V < V_{DCIN} < 28V		2	6	mV
			22	65	ppm/V
REF Load Regulation	I_{REF} = 0 to 1mA		6	13	mV
SWITCHING REGULATOR					
PWM Oscillator Frequency		270	300	330	kHz
EXT Driver Source On-Resistance			4	7	Ω
EXT Driver Sink On-Resistance			2.5	4.5	Ω
VH Output Voltage	DCIN - VH, 6V < V_{DCIN} <28V, I_{VH} = 0 to 20mA	4.75		5.75	V
CSSN/CSSP Input Current	V_{CSSN}/V_{CSSP} = 28V, V_{DCIN} = 28V		70	200	µA
CSSN/CSSP Off-State Leakage	V_{DCIN} = V_{SSN}/V_{CSSP} = 18V, V_{BATT} = V_{CSB} = 18V		1.5	5	µA
BATT, CSB Input Current	ICHG/EN = 0 (charger disabled)		0.2	1	µA
	ICHG/EN = REF (charger enabled)		250	500	
BATT, CSB Input Current	DCIN ≤ BATT (input power removed)		1.5	5	µA

ELECTRICAL CHARACTERISTICS (continued)

(Circuit of Figure 1, V_{DCIN} = V_{CSSP} = V_{CSSN} = 18V, $V_{ICHG/EN}$ = V_{REF}, V_{VADJ} = V_{REF}/2. MAX1873R: V_{BATT} = V_{CSB} = 8.4V; MAX1873S: V_{BATT} = V_{CSB} = 12.6V; MAX1873T: V_{BATT} = V_{CSB} = 16.8V; **T_A = 0°C to +85°C**. Typical values are at T_A = +25°C, unless otherwise noted.)

PARAMETER	CONDITIONS		MIN	TYP	MAX	UNITS
BATT Overvoltage Cutoff Threshold	2-cell version MAX1873R		10.45	11	11.55	V
	3-cell version MAX1873S		15.675	16.5	17.325	
	4-cell version MAX1873T (Note 1)		17.575	18.5	19.425	
Battery Regulation Voltage	MAX1873R (2 Li+ cells)	V_{VADJ} = 0	7.898	7.958	8.018	V
		V_{VADJ} = V_{REF}/2	8.337	8.4	8.463	
		V_{VADJ} = V_{REF} (Note 1)	8.775	8.842	8.909	
	MAX1873S (3 Li+ cells)	V_{VADJ} = 0	11.847	11.937	12.027	
		V_{VADJ} = V_{REF}/2	12.505	12.6	12.695	
		V_{VADJ} = V_{REF} (Note 1)	13.163	13.263	13.363	
	MAX1873T (4 Li+ cells)	V_{VADJ} = 0	15.796	15.916	16.036	
		V_{VADJ} = V_{REF}/2	16.674	16.8	16.926	
		V_{VADJ} = V_{REF} (Note 1)	17.551	17.684	17.817	
BATT Undervoltage Threshold	For I_{CHG}/20 trickle charge	MAX1873R	4.8	5.0	5.2	V
		MAX1873S	7.2	7.5	7.8	
		MAX1873T	9.6	10	10.4	
CURRENT SENSE						
CSB to BATT Battery Current-Sense Voltage	$V_{ICHG/EN}$ = V_{REF}		190	200	210	mV
	$V_{ICHG/EN}$ = V_{REF}/4		40	50	60	
CSB to BATT Current-Sense Voltage when V_{BATT} < 2.5V per Cell			5	10	15	mV
CSSP to CSSN Current-Sense Voltage	6V < V_{CSSP} < 28V		90	100	110	mV
CONTROL INPUTS/OUTPUTS						
ICHG/EN Input Threshold	Includes 50mV of hysteresis		500	600	700	mV
ICHG/EN Input Voltage Range For Charge Current Adjustment			700		V_{REF}	mV
VADJ Input Current	V_{VADJ} = V_{REF}/2		-100		100	nA
ICHG/EN Input Current	$V_{ICHG/EN}$ = V_{REF}		-100		100	nA
VADJ Input Voltage Range			0		V_{REF}	V
IOUT Voltage	Full scale	V_{CSB} - V_{BATT} = 200mV, 0 < I_{OUT} < 500µA	3.6	4.0	4.4	V
	25% scale	V_{CSB} - V_{BATT} = 50mV, 0 < I_{OUT} < 500µA	0.9	1.0	1.1	
	Trickle charge	V_{CSB} - V_{BATT} = 10mV	75	200	325	mV
	No charge current	V_{CSB} - V_{BATT} = 0, I_{IOUT} = sinking 20µA	40	70	90	

Simple Current-Limited Switch-Mode Li+ Charger Controller

ELECTRICAL CHARACTERISTICS

(Circuit of Figure 1, V_{DCIN} = V_{CSSP} = V_{CSSN} = 18V, $V_{ICHG/EN}$ = V_{REF}, V_{VADJ} = V_{REF}/2. MAX1873R: V_{BATT} = V_{CSB} = 8.4V; MAX1873S: V_{BATT} = V_{CSB} = 12.6V; MAX1873T: V_{BATT} = V_{CSB} = 16.8V; **T_A = -40°C to +85°C**. Typical values are at T_A = +25°C, unless otherwise noted.)

PARAMETER	CONDITIONS		MIN	MAX	UNITS
INPUT SUPPLY AND REFERENCE					
DCIN Input Voltage Range			6	28	V
DCIN Quiescent Supply Current	6.0V < V_{DCIN} < 28V			7	mA
	DCIN ≤ BATT			10	µA
DCIN to BATT Undervoltage Threshold	CSSP = DCIN, input falling		0.05	0.2	V
DCIN to BATT Undervoltage Threshold	CSSP = DCIN, input rising		0.22	0.38	V
VL Output Voltage	6.0V < V_{DCIN} < 28V		5.15	5.65	V
VL Output Load Regulation	I_{VL} = 0 to 3mA			50	mV
REF Output Voltage	I_{REF} = 21µA (200kΩ load)		4.179	4.221	V
REF Line Regulation	6.0V < V_{DCIN} < 28V			6	mV
				65	ppm/V
REF Load Regulation	I_{REF} = 0 to 1mA			13	mV
SWITCHING REGULATOR					
PWM Oscillator Frequency			270	330	kHz
EXT Driver Source On-Resistance				7	Ω
EXT Driver Sink On-Resistance				4.5	Ω
VH Output Voltage	DCIN - VH, 6V < V_{DCIN} <28V, I_{VH} = 0 to 20mA		4.75	5.75	V
CSSN/CSSP Input Current	V_{CSSN}/V_{CSSP} = 28V, V_{DCIN} = 28V			200	µA
CSSN/CSSP Off-State Leakage	V_{DCIN} = V_{SSN}/V_{CSSP} = 18V V_{BATT} = V_{CSB} = 18V			5	µA
BATT, CSB Input Current	ICHG/EN = 0 (charger disabled)			1	µA
	ICHG/EN = REF (charger enabled)			500	
BATT, CSB Input Current	DCIN ≤ BATT (input power removed)			5	µA
BATT Overvoltage Cutoff Threshold	2-cell version MAX1873R		10.45	11.55	V
	3-cell version MAX1873S		15.675	17.325	
	4-cell version MAX1873T (Note 1)		17.575	19.425	
Battery Regulation Voltage	MAX1873R (2 Li+ cells)	V_{VADJ} = 0	7.898	8.018	V
		V_{VADJ} = V_{REF}/2	8.337	8.463	
		V_{VADJ} = V_{REF} (Note 1)	8.775	8.909	
	MAX1873S (3 Li+ cells)	V_{VADJ} = 0	11.847	12.027	
		V_{VADJ} = V_{REF}/2	12.505	12.695	
		V_{VADJ} = V_{REF} (Note 1)	13.163	13.363	
	MAX1873T (4 Li+ cells)	V_{VADJ} = 0	15.796	16.036	
		V_{VADJ} = V_{REF}/2	16.674	16.926	
		V_{VADJ} = V_{REF} (Note 1)	17.551	17.817	

ELECTRICAL CHARACTERISTICS (continued)

(Circuit of Figure 1, V_{DCIN} = V_{CSSP} = V_{CSSN} = 18V, $V_{ICHG/EN}$ = V_{REF}, V_{VADJ} = V_{REF}/2. MAX1873R: V_{BATT} = V_{CSB} = 8.4V; MAX1873S: V_{BATT} = V_{CSB} = 12.6V; MAX1873T: V_{BATT} = V_{CSB} = 16.8V; **T_A = -40°C to +85°C**. Typical values are at T_A = +25°C, unless otherwise noted.)

PARAMETER	CONDITIONS		MIN	MAX	UNITS
BATT Undervoltage Threshold	For I_{CHG}/20 trickle charge	MAX1873R	4.8	5.2	V
		MAX1873S	7.2	7.8	
		MAX1873T	9.6	10.4	
CURRENT SENSE					
CSB to BATT Battery Current-Sense Voltage	$V_{ICHG/EN}$ = V_{REF}		190	210	mV
	$V_{ICHG/EN}$ = V_{REF}/4		40	60	mV
CSB to BATT Current-Sense Voltage when V_{BATT} < 2.5V per Cell			5	15	mV
CSSP to CSSN Current-Sense Voltage	6V < V_{CSSP} < 28V		90	110	mV
CONTROL INPUTS/OUTPUTS					
ICHG/EN Input Threshold	Includes 50mV of hysteresis		500	700	mV
ICHG/EN Input Voltage Range for Charge Current Adjustment			700	V_{REF}	mV
VADJ Input Current	V_{VADJ} = V_{REF}/2		-100	100	nA
ICHG/EN Input Current	$V_{ICHG/EN}$ = V_{REF}		-100	100	nA
VADJ Input Voltage Range			0	V_{REF}	V
IOUT Voltage	Full scale	V_{CSB} - V_{BATT} = 200mV, 0 < I_{OUT} < 500µA	3.6	4.4	V
	25% scale	V_{CSB} - V_{BATT} = 50mV, 0 < I_{OUT} < 500µA	0.9	1.1	
	Trickle charge	V_{CSB} - V_{BATT} = 10mV	75	325	mV
	No charge current	V_{CSB} - V_{BATT} = 0, I_{IOUT} = sinking 20µA	40	90	

Note 1: While it may appear possible to set the Battery Regulation Voltage higher than the Battery Overvoltage Cutoff Threshold, this cannot happen because both parameters are derived from the same reference and track each other.

Note 2: Specifications to -40°C are guaranteed by design, not production tested.

Simple Current-Limited Switch-Mode Li+ Charger Controller

Typical Operating Characteristics

(Circuit of Figure 1, V_{DCIN} = V_{CSSP} = V_{CSSN} = 18V, $V_{ICHG/EN}$ = V_{REF}, V_{VADJ} = V_{REF}/2. MAX1873R: V_{BATT} = V_{CSB} = 8.4V; MAX1873S: V_{BATT} = V_{CSB} = 12.6V; MAX1873T: V_{BATT} = V_{CSB} = 16.8V; T_A = +25°C, unless otherwise noted).

MAX1873T (4-CELL)
BATTERY VOLTAGE vs. CHARGING CURRENT

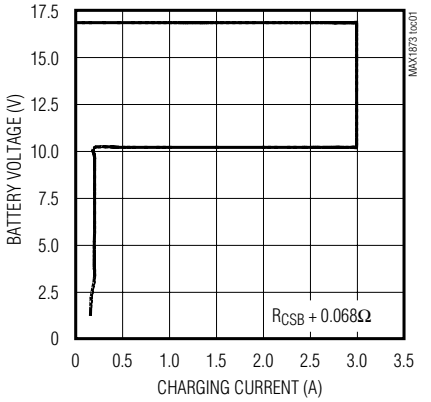

IOUT VOLTAGE
vs. CSB-BATT VOLTAGE

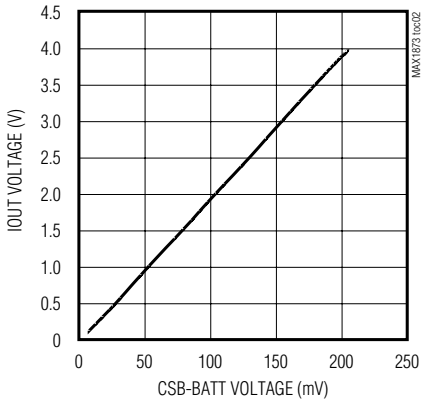

MAX1873T (4-CELL)
BATTERY REGULATION VOLTAGE
vs. VADJ VOLTAGE

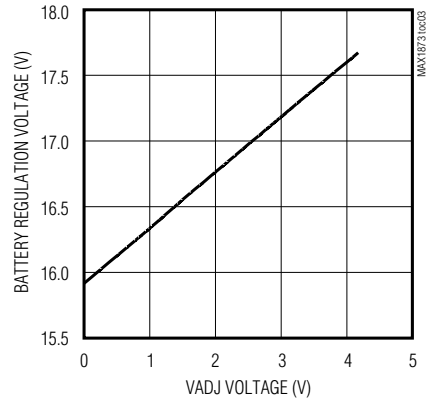

RECENT VOLTAGE vs. TEMPERATURE

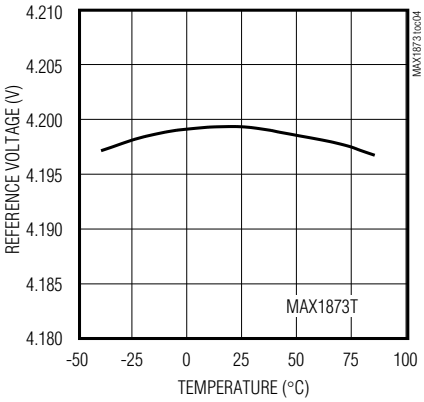

RECENT VOLTAGE
vs. REFERENCE CURRENT

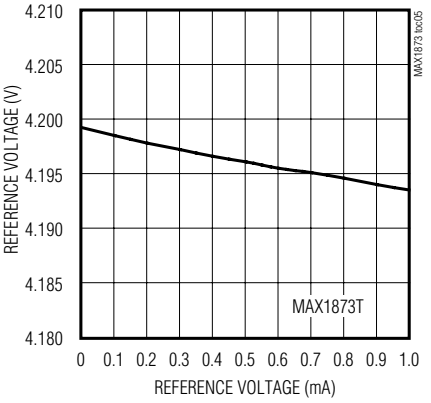

MAX1873R (2-CELL)
EFFICIENCY vs. INPUT VOLTAGE

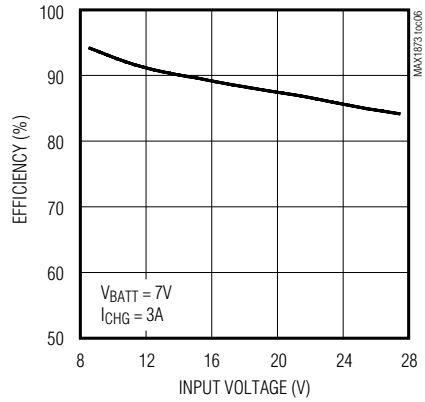

Typical Operating Characteristics (continued)

(Circuit of Figure 1, V_{DCIN} = V_{CSSP} = V_{CSSN} = 18V, $V_{ICHG/EN}$ = V_{REF}, V_{VADJ} = V_{REF}/2. MAX1873R: V_{BATT} = V_{CSB} = 8.4V; MAX1873S: V_{BATT} = V_{CSB} = 12.6V; MAX1873T: V_{BATT} = V_{CSB} = 16.8V; T_A = +25°C, unless otherwise noted).

**MAX1873S (3-CELL)
EFFICIENCY vs. INPUT VOLTAGE**

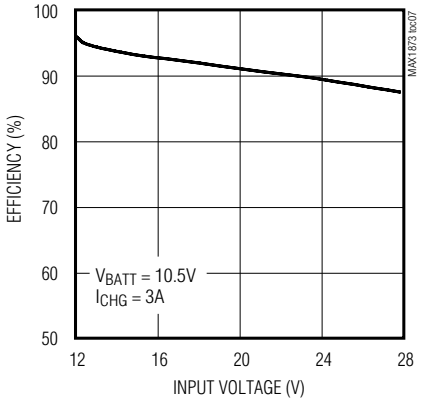

**MAX1873T (4-CELL)
EFFICIENCY vs. INPUT VOLTAGE**

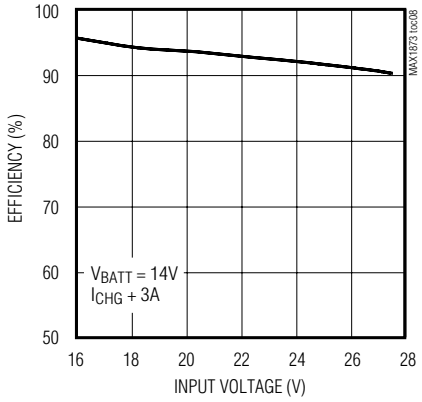

**4-CELL BATTERY VOLTAGE AND
CHARGING CURRENT vs. TIME**

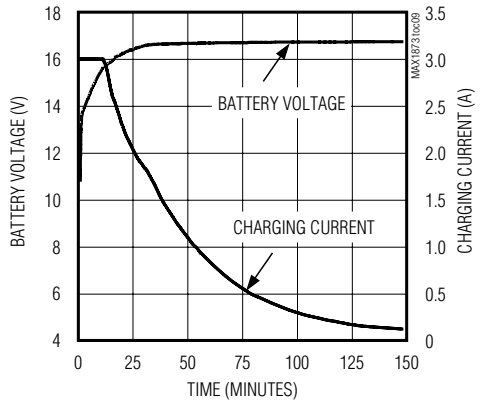

**CHARGING CURRENT
vs. SYSTEM LOAD CURRENT**

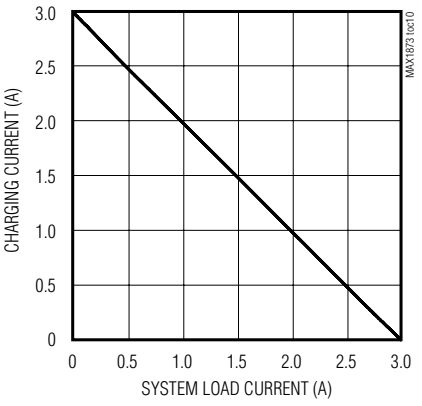

Simple Current-Limited Switch-Mode Li+ Charger Controller

Pin Description

PIN	NAME	FUNCTION
1	CSSN	Source Current-Sense Negative Input. Connect a current-sense resistor between CSSP and CSSN to limit total current drawn from the input source. To disable input current sensing, connect CSSN to CSSP.
2	CSSP	Source Current-Sense Positive Input. Also used for input source undervoltage sensing.
3	CCS	Input-Source-Current Regulation Loop Compensation Point
4	CCV	Battery Regulation Voltage Control-Loop Compensation Point. Pulling CCV high (to VL) through a 1.5kΩ resistor disables the voltage control loop for charging NiCd or NiMH batteries.
5	CCI	Battery Charge Current Control-Loop Compensation Point
6	ICHG/EN	Battery Charging Current Adjust/Shutdown Input. This pin can be connected to a resistive-divider between REF and GND to adjust the charge current sense threshold between CSB and BATT. When ICHG/EN is connected to REF, the CSB-BATT threshold is 200mV. Pull ICHG/EN low (below 500mV) to disable charging and reduce the supply current to 5µA.
7	IOUT	Charge Current Monitor Output. Analog Voltage Output that is proportional to charging current. V_{IOUT} = 20 (V_{CSB} - V_{BATT}) or 4V for a 200mV current-sense voltage (maximum load capacitance = 5nF).
8	VADJ	Battery Regulation Voltage Adjust. Set the battery regulation voltage from 3.979V per cell to 4.421V per cell with 1% resistors. Output accuracy remains better than 0.75% even with 1% adjusting resistors due to reduced adjustment range. For 4.2V, the voltage-divider resistors must be equal value (nominally 100kΩ each).
9	REF	4.2V Reference Voltage Output. Bypass to GND with a 1µF ceramic capacitor.
10	BATT	Battery Voltage-Sense Input and Battery Current-Sense Negative Input. Bypass to GND with a 68µF for MAX1873R, 47µF for MAX1873S, and 33µF for MAX1873T. Use capacitors with ESR < 1Ω.
11	CSB	Battery Current-Sense Positive Input
12	GND	Ground
13	VH	Internal VH Regulator. VH internally supplies power to the EXT driver. Connect a 0.22µF ceramic capacitor between VH and DCIN.
14	EXT	Drive Output for External PFET. EXT swings from V_{DCIN} to V_{DCIN} - 5V.
15	DCIN	Power-Supply Input. DCIN is the input supply for charger IC. Bypass to GND with a 0.22µF ceramic capacitor.
16	VL	Internal VL Regulator. VL powers the MAX1873's control logic at 5.4V. Bypass to GND with a 2.2µF or larger ceramic capacitor.

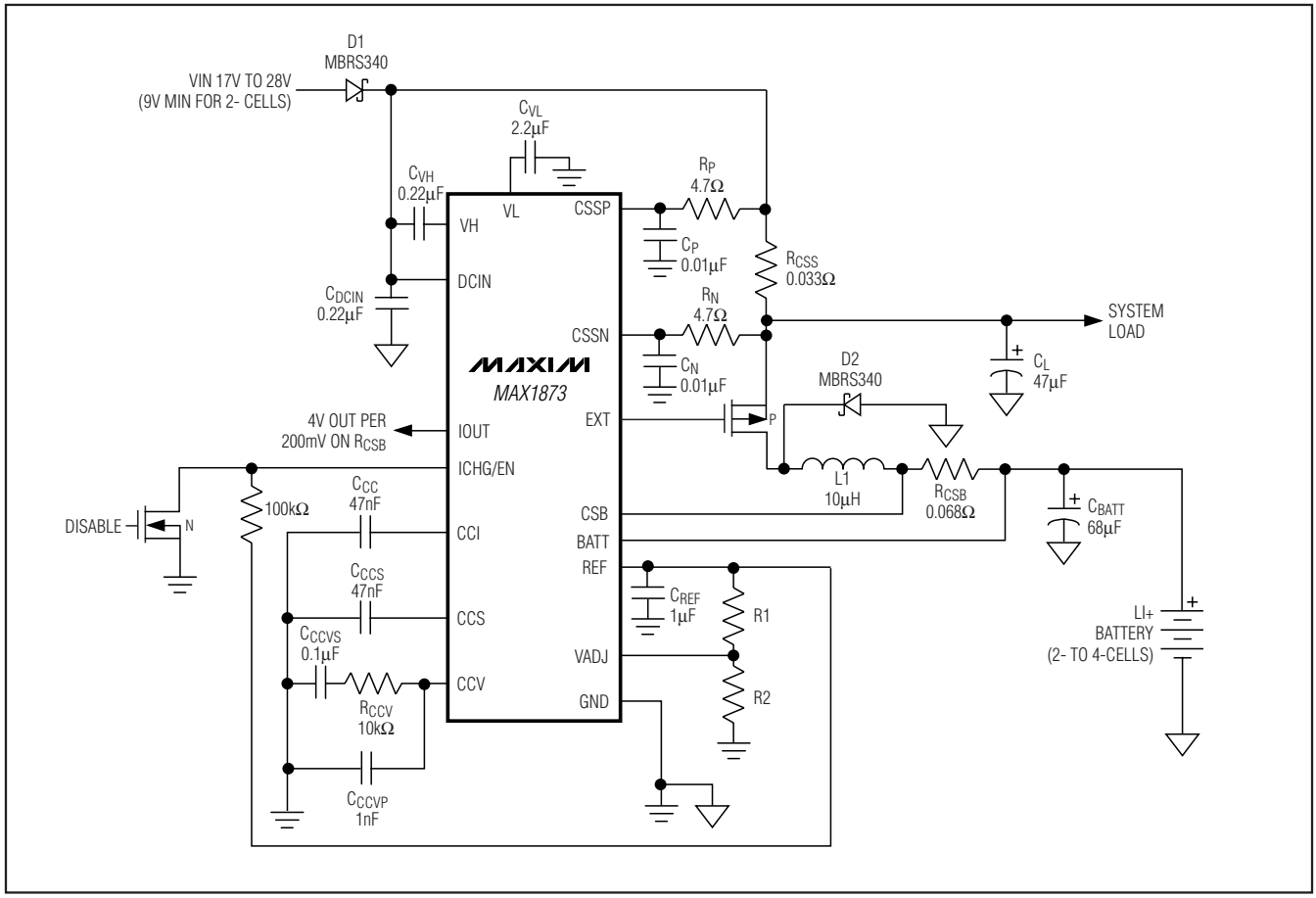

Figure 1. Typical Application Circuit

Detailed Description

The MAX1873 includes all of the functions necessary to charge 2-, 3-, or 4-series cell lithium-ion (Li+) battery packs. It includes a high-efficiency step-down DC-DC converter that controls charging voltage and current. It also features input source current limiting so that an AC adapter that supplies less than the total system current in addition to charging current can be used without fear of overload.

The DC-DC converter uses an external P-channel MOSFET switch, inductor, and diode to convert the input voltage to charging current or charging voltage. The typical application circuit is shown in Figure 1. Charging current is set by R_{CSB}, while the battery voltage is measured at BATT. The battery regulation voltage limit is nominally set to 8.4V for the R version (2-cells), 12.6V for the S version (3-cells), and 16.8V for the T version (4-cells), but it can also be adjusted to other voltages for different Li+ chemistries.

Voltage Regulator

Li+ batteries require a high-accuracy voltage limit while charging. The battery regulation voltage is nominally set to 4.2V per cell and can be adjusted ±5.25% by setting the voltage at VADJ between REF and ground. By limiting the adjust range of the regulation voltage, an overall voltage accuracy of better than ±0.75% is maintained while using 1% resistors.

An internal error amplifier maintains voltage regulation to within ±0.75%. The amplifier is compensated at CCV (see Figure 1). Individual compensation of the voltage regulation and current regulation loops allows for optimal compensation of each. A typical CCV compensation network is shown in Figure 1 and will suffice for most designs.

Simple Current-Limited Switch-Mode Li+ Charger Controller

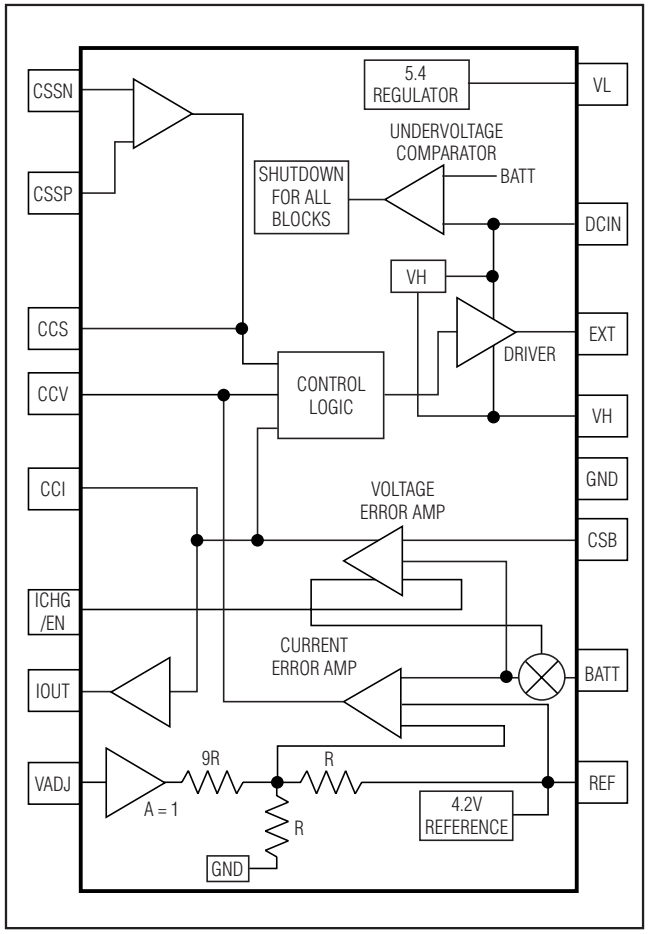

Figure 2. Functional Block Diagram

Charging-Current Regulator

The charging-current regulator limits the battery charging current. Current is sensed by the current-sense resistor (R_{CSB} in Figure 1) connected between BATT and CSB. The voltage on ICHG/EN can also adjust the charging current. Full-scale charging current (I_{CHG} = 0.2V / RCSB) is achieved by connecting ICHG/EN to REF. See *Setting the Charging-Current Limit* section for more details.

The charging-current error amplifier is compensated at CCI (Figure 1). A 47nF capacitor from CCI to GND provides suitable performance for most applications.

Input-Current Regulator

The input-current regulator limits the source current by reducing charging current when the input current reaches the set input-current limit. In a typical portable design, system load current will normally fluctuate as portions of the system are powered up or put to sleep. Without the benefit of input-current regulation, the input source would have to be able to supply the maximum system current plus the maximum charger-input current. The MAX1873 input-current loop ensures that the system always gets adequate power by reducing charging current as needed. By using the input-current limiter, the size and cost of the AC adapter can be reduced. See *Setting the Input-Current Limit* section for design details.

Input current is measured through an external sense resistor, R_{CSS}, between CSSP and CSSN. The input-current limit feature may be bypassed by connecting CSSP to CSSN.

The input-current error amplifier is compensated at CCS. A 47nF capacitor from CCS to GND provides suitable performance for most applications.

PWM Controller

The pulse-width modulation (PWM) controller drives the external MOSFET at a constant 300kHz to regulate the charging current and voltage while maintaining low noise. The controller accepts inputs from the CCI, CCV, and CCS error amplifiers. The lowest signal of these three drives the PWM controller. An internal clamp limits the noncontrolling signals to within 200mV of the controlling signal to prevent delay when switching between the battery-voltage control, charging-current control, and input-current regulation loops.

Shutdown

The MAX1873 stops charging when ICHG/EN is pulled low (below 0.5V) and shuts down when the voltage at DCIN falls below the voltage at BATT. In shutdown, the internal resistive voltage-divider is disconnected from BATT to reduce the battery drain. When AC-adapter power is removed, or when the part is shut down, the MAX1873 typically draws 1.5µA from the battery.

Source Undervoltage Shutdown (Dropout)

The DCIN voltage is compared to the voltage at BATT. When the voltage at DCIN drops below BATT + 50mV, the charger turns off, preventing drain on the battery when the input source is not present or is below the battery voltage.

A diode is typically connected between the input source and the charger input. This diode prevents the battery from discharging through the body diode of the high-side MOSFET should the input be shorted to GND. It also protects the charger, battery, and systems from reversed polarity adapters and negative input voltages.

Charge-Current Monitor Output

IOUT is an analog voltage output that is proportional to the actual charge current. With the aid of a microcontroller, the IOUT signal can facilitate gas-gauging, indicate percent of charge, or charge-time remaining. The equation governing this output is:

$$V_{IOUT} = 20(V_{CSB} - V_{BATT}) \text{ or}$$
$$V_{OUT} = 20(R_{CSB} \times I_{CHG})$$

where V_{CSB} and V_{BATT} are the voltages at the CSB and BATT pins, and ICHG is the charging current. IOUT can drive a load capacitance of 5nF.

Design Procedure

Setting the Battery-Regulation Voltage

For Li+ batteries, VADJ sets the per-cell battery-regulation voltage limit. To set the VADJ voltage, use a resistive-divider from REF to GND (Figure 1). For a battery voltage of 4.2V per cell, use resistors of equal value (100kΩ each) in the VADJ voltage-divider. To set other battery-regulation voltages, see the remainder of this section.

The per-cell battery regulation voltage is a function of Li+ battery chemistry and construction and is usually clearly specified by the manufacturer. If this is not clearly specified, be sure to consult the battery manufacturer to determine this voltage before charging any Li+ battery. Once the per-cell voltage is determined, the VADJ voltage is calculated by the equation:

$$V_{VADJ} = \left[9.5(V_{BATTR})/N\right] - (9V_{REF})$$

where V_{BATTR} is the desired battery-regulation voltage (for the total series-cell stack), N is the number of Li+ battery cells, and V_{REF} is the reference voltage (4.2V).

Set V_{VADJ} by choosing R1. R1 should be selected so that the total divider resistance (R1+ R2) is near 200kΩ. R2 can then be calculated as follows:

$$R2 = \left[V_{VADJ}/(V_{REF} - V_{VADJ})\right] \times R1$$

Since the full range of VADJ (from 0 to VREF) results in a ±5.263% adjustment of the battery-regulation limit (3.979V to 4.421V), the resistive-divider's accuracy need not be as tight as the output-voltage accuracy. Using 1% resistors for the voltage-divider still provides ±0.75% battery-voltage-regulation accuracy.

Setting the Charging-Current Limit

The charging current ICHG is sensed by the current-sense resistor R_{CSB} between CSB and BATT, and is also adjusted by the voltage at ICHG/EN. If ICHG/EN is connected to REF (the standard connection), the charge current is given by:

$$I_{CHG} = 0.2V/R_{CSB}$$

In some cases, common values for R_{CSB} may not allow the desired charge-current value. It may also be desirable to reduce the 0.2V CSB-to-BATT sense threshold to reduce power dissipation. In such cases, the ICHG/EN input may be used to reduce the charge-current-sense threshold. In those cases the equation for charge current becomes:

$$I_{CHG} = 0.2V(V_{ICH/EN}/V_{REF})/R_{CSB}$$

Setting the Input-Current Limit

The input-source current limit, I_{IN}, is set by the input-current sense resistor, R_{CSS}, (Figure 1) connected between CSSP and CSSN. The equation for the source current is:

$$I_{IN} = 0.1V/R_{CSS}$$

This limit is typically set to the current rating of the input power source or AC adapter to protect the input source from overload. Short CSSP and CSSN to DCIN if the input-source current-limit feature is not used.

Inductor Selection

The inductor value may be selected for more or less ripple current. The greater the inductance, the lower the ripple current. However, as the physical size is kept the same, larger inductance value typically results in higher inductor series resistance and lower inductor saturation current. Typically, a good tradeoff is to choose the inductor such that the ripple current is approximately 30% to 50% of the DC average charging current. The ratio of ripple current to DC charging current (LIR) can be used to calculate the inductor value:

$$L = \left\{V_{BATT}\left[V_{DCIN(MAX)} - V_{BATT}\right]\right\} / \left[V_{DCIN(MAX)} \times f_{SW} \times I_{CHG} \times LIR\right]$$

where f_{SW} is the switching frequency (nominally 300kHz) and I_{CHG} is the charging current. The peak inductor current is given by:

Simple Current-Limited Switch-Mode Li+ Charger Controller

$$I_{PEAK} = I_{CHG}(1+LIR/2)$$

For example, for a 4-cell charging current of 3A, a $V_{DCIN(MAX)}$ of 24V, and an LIR of 0.5, L is calculated to be 11.2µH with a peak current of 3.75A. Therefore a 10µH inductor would be satisfactory.

MOSFET Selection

The MAX1873 uses a P-channel power MOSFET switch. The MOSFET must be selected to meet the efficiency or power dissipation requirements of the charging circuit as well as the maximum temperature of the MOSFET. Characteristics that affect MOSFET power dissipation are drain-source on-resistance ($R_{DS(ON)}$) and gate charge. Generally these are inversely proportional.

To determine MOSFET power dissipation, the operating duty cycle must first be calculated. When the charger is operating at higher currents, the inductor current will be continuous (the inductor current will not drop to 0). In this case, the high-side MOSFET duty cycle (D) can be approximated by the equation:

$$D \approx \frac{V_{BATT}}{V_{DCIN}}$$

And the catch-diode duty cycle (D') will be 1 - D or:

$$D' \approx \frac{V_{DCIN} - V_{BATT}}{V_{DCIN}}$$

where V_{BATT} is the battery-regulation voltage (typically 4.2V per cell) and V_{DCIN} is the source-input voltage.

For MOSFETs, the worst-case power dissipation due to on-resistance (P_R) occurs at the maximum duty cycle, where the operating conditions are minimum source-voltage and maximum battery voltage. P_R can be approximated by the equation:

$$P_R = \frac{V_{BATT(MAX)}}{V_{DCIN(MIN)}} \times R_{DS(ON)} \times I_{CHG}^2$$

Transition losses (P_T) can be approximated by the equation:

$$P_T = \frac{V_{DCIN} \times I_{CHG} \times f_{SW} \times t_{TR}}{3}$$

where t_{TR} is the MOSFET transition time and f_{SW} is the switching frequency. The total power dissipation of the MOSFET is then:

$$P_{TOT} = P_R + P_T$$

Diode Selection

A Schottky rectifier with a current rating of at least the charge current limit must be connected from the MOSFET drain to GND. The voltage rating of the diode must exceed the maximum expected input voltage.

Capacitor Selection

The input capacitor shunts the switching current from the charger input and prevents that current from circulating through the source, typically an AC wall cube. Thus the input capacitor must be able to handle the input RMS current. At high charging currents, the converter will typically operate in continuous conduction. In this case, the RMS current of the input capacitor can be approximated with the equation:

$$I_{CIN} \approx I_{CHG}\sqrt{D - D^2}$$

where I_{CIN} is the input capacitor RMS current, D is the PWM converter duty cycle (typically V_{BATT}/V_{DCIN}), and I_{CHG} is the battery-charging current.

The maximum RMS input current occurs at 50% duty cycle, so the worst-case input-ripple current is 0.5 x I_{CHG}. If the input-to-output voltage ratio is such that the PWM controller will never work at 50% duty cycle, then the worst-case capacitor current will occur where the duty cycle is nearest 50%.

The impedance of the input capacitor is critical to preventing AC currents from flowing back into the wall cube. This requirement varies depending on the wall cube's impedance and the requirements of any conducted or radiated EMI specifications that must be met. Low ESR aluminum electrolytic capacitors may be used, however, tantalum or high-value ceramic capacitors generally provide better performance.

The output filter capacitor absorbs the inductor-ripple current. The output-capacitor impedance must be significantly less than that of the battery to ensure that it will absorb the ripple current. Both the capacitance and the ESR rating of the capacitor are important for its effectiveness as a filter and to ensure stability of the PWM circuit. The minimum output capacitance for stability is:

$$C_{OUT} > \frac{V_{REF}\left(1 + \frac{V_{BATT}}{V_{DCIN(MIN)}}\right)}{V_{BATT} \times f_{SW} \times R_{CSB}}$$

where C_{OUT} is the total output capacitance, V_{REF} is the reference voltage (4.2V), V_{BATT} is the maximum battery regulation voltage (typically 4.2V per cell), $V_{DCIN\ (MIN)}$ is the minimum source-input voltage, and R_{CSB} is the current-sense resistor (68mΩ for 3A charging current) from CSB to BATT.

The maximum output capacitor ESR allowed for stability is:

$$R_{ESR} < \frac{R_{CSB} \times V_{BATT}}{V_{REF}}$$

where R_{ESR} is the output capacitor ESR.

Compensation Components

The three regulation loops: input current limit, charging current limit, and charging voltage limit are compensated separately using the CCS, CCI, and CCV pins, respectively.

The charge-current loop error-amplifier output is brought out at CCI. Likewise, the source-current error-amplifier output is brought out at CCS. 47nF capacitors to ground at CCI and CCS compensate the current loops in most charger designs. Raising the value of these capacitors reduces the bandwidth of these loops.

The voltage-regulating loop error-amplifier output is brought out at CCV. Compensate this loop by connecting a capacitor in parallel with a series resistor-capacitor from CCV to GND. Recommended values are shown in Figure 1.

Applications Information

VL, VH, and REF Bypassing

The MAX1873 uses two internal linear regulators to power internal circuitry. The outputs of the linear regulators are at VL and VH. VL powers the internal control circuitry while VH powers the MOSFET gate driver. VL may also power a limited amount of external circuitry, as long as its maximum current (3mA) is not exceeded.

A 2.2µF bypass capacitor is required from VL to GND to ensure stability. A 0.22µF capacitor is required from VH to DCIN. A 1µF bypass capacitor is required between REF and GND to ensure that the internal 4.2V reference is stable. In all cases, use low-ESR ceramic capacitors.

Charging NiMH and NiCd Cells

The MAX1873 may be used in multichemistry chargers. When charging NiMH or NiCd cells, pull CCV high (to VL) with a 1.5 kΩ resistor. This disables the voltage control loop so the Li+ battery-regulation voltage settings do not interfere with charging. However, the battery undervoltage-protection features remain active so charging current is reduced when V_{BATT} is less than the levels stated in the BATT Undervoltage Threshold line in the *Electrical Characteristics Table.* 5- or 6-series Ni cells may be charged with the R version device, 7- to 9-cells with the S version, and 10-cells with the T version.

The MAX1873 contains no charge-termination algorithms for Ni cells; it acts only as a current source. A separate microcontroller or Ni-cell charge controller must instruct the MAX1873 to terminate charging.

Chip Information

PROCESS: BiCMOS

TRANSISTOR COUNT: 1397

Pin Configuration

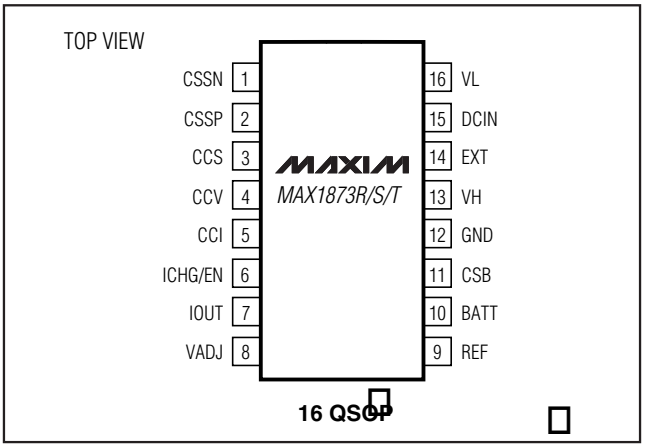

Simple Current-Limited Switch-Mode Li+ Charger Controller

Package Information

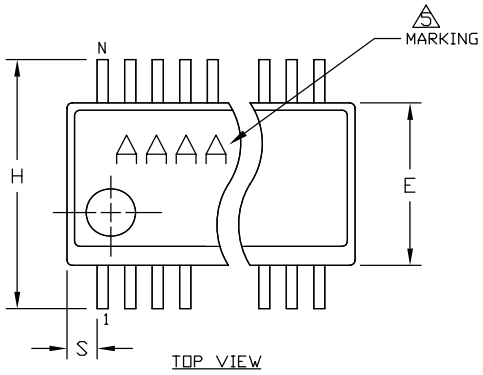

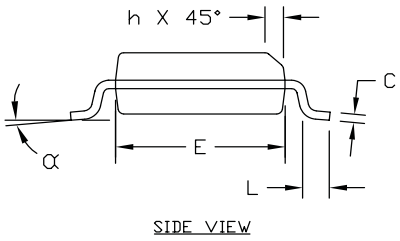

	INCHES		MILLIMETERS	
DIM	MIN	MAX	MIN	MAX
A	.053	.069	1.35	1.75
A1	.004	.010	.102	.254
A2	.049	.065	1.245	1.651
B	.008	.012	0.20	0.30
C	.0075	.0098	0.191	0.249
D	SEE VARIATIONS			
E	.150	.157	3.81	3.99
e	.025 BSC		0.635 BSC	
H	.230	.244	5.84	6.20
h	.010	.016	0.25	0.41
L	.016	.035	0.41	0.89
N	SEE VARIATIONS			
α	0°	8°	0°	8°

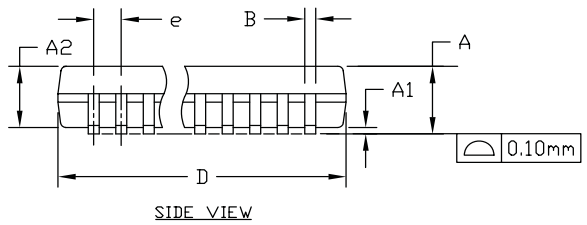

VARIATIONS:

	INCHES		MILLIMETERS			
	MIN.	MAX.	MIN.	MAX.	N	PKG CODES
D	.189	.196	4.80	4.98	16	E16-1, E16M-1, E16-4, E16-5, E16-8F
S	.0020	.0070	0.05	0.18		
D	.337	.344	8.56	8.74	20	E20-1, E20-2, E20-3
S	.0500	.0550	1.270	1.397		
D	.337	.344	8.56	8.74	24	E24-1, E24-2, E24-3
S	.0250	.0300	0.635	0.762		
D	.386	.393	9.80	9.98	28	E28-1, E28M-1, E28-2
S	.0250	.0300	0.635	0.762		

NOTES:
1. D & E DO NOT INCLUDE MOLD FLASH OR PROTRUSIONS.
2. MOLD FLASH OR PROTRUSIONS NOT TO EXCEED .006" PER SIDE.
3. CONTROLLING DIMENSIONS: INCHES.
4. MEETS JEDEC MO137.
5. MARKING SHOWN IS FOR PKG. ORIENTATION ONLY.
6. ALL DIMENSIONS APPLY TO BOTH LEADED (-) AND PbFREE (+) PKG. CODES.

—DRAWING NOT TO SCALE—

maxim integrated

TITLE:
PACKAGE OUTLINE
QSOP .150", .025" LEAD PITCH

APPROVAL	DOCUMENT CONTROL NO.	REV.	
	21-0055	J	1/1

Maxim cannot assume responsibility for use of any circuitry other than circuitry entirely embodied in a Maxim product. No circuit patent licenses are implied. Maxim reserves the right to change the circuitry and specifications without notice at any time.

© 2001 Maxim Integrated Products Printed USA MAXIM is a registered trademark of Maxim Integrated Products.