19-2014; Rev 3; 8/04

EVALUATION KIT AVAILABLE

CDMA IF VGAs and I/Q Demodulators with VCO and Synthesizer

General Description

The MAX2306/MAX2308/MAX2309 are IF receivers designed for dual-band, dual-mode, and single-mode N-CDMA and W-CDMA cellular phone systems. The signal path consists of a variable-gain amplifier (VGA) and I/Q demodulator. The devices feature guaranteed +2.7V operation, a gain control range of over 110dB, and high input IP3 (-31dBm at 35dB gain, 3.4dBm at -35dB gain).

Unlike similar devices, the MAX2306 family of receivers includes dual oscillators and synthesizers to form a self-contained IF subsystem. The synthesizer's reference and RF dividers are fully programmable through a 3-wire serial bus, enabling dual-band system architectures using any common reference and IF frequency. The differential baseband outputs have enough bandwidth to suit both N-CDMA and W-CDMA systems, and offer saturated output levels of 2.7Vp-p at a low +2.75V supply voltage. Including the low-noise voltage-controlled oscillator (VCO) and synthesizer, the MAX2306 draws only 26mA from a +2.75V supply in CDMA (differential IF) mode.

The MAX2306/MAX2308/MAX2309 are available in 28-pin Thin QFN and QFN packages.

Applications

Single/Dual/Triple-Mode CDMA Handsets

Globalstar Dual-Mode Handsets

Wireless Data Links

W-CDMA Handsets

Wireless Local Loop (WLL)

Features

- **Complete IF Subsystem Includes VCO and Synthesizer**
- **Supports Dual-Band, Triple-Mode Operation**
- **VGA with >110dB Gain Control**
- **Quadrature Demodulator**
- **High Output Level (2.7V)**
- **Programmable Charge-Pump Current**
- **Supports Any IF Frequency Between 40MHz and 300MHz**
- **3-Wire Programmable Interface**
- **Low Supply Voltage (+2.7V)**

Ordering Information

PART	TEMP RANGE	PIN-PACKAGE
MAX2306EGI	-40°C to +85°C	28 QFN-EP*
MAX2306ETI	-40°C to +85°C	28 TQFN-EP*
MAX2308EGI	-40°C to +85°C	28 QFN-EP*
MAX2308ETI	-40°C to +85°C	28 TQFN-EP*
MAX2309EGI	-40°C to +85°C	28 QFN-EP*
MAX2309ETI	-40°C to +85°C	28 TQFN-EP*

**Exposed paddle*

Pin Configurations appear at end of data sheet.

Block Diagram appears at end of data sheet.

Selector Guide

PART	MODE	DESCRIPTION	INPUT RANGE
MAX2306	AMPS, Cellular CDMA, PCS CDMA	Dual Band, Triple Mode with Two IF VCOs	40MHz to 300MHz
MAX2308	AMPS, Cellular CDMA, PCS CDMA	Dual Band, Triple Mode with Common IF VCO	70MHz to 300MHz
MAX2309	External AMPS, Cellular CDMA, PCS CDMA	Dual Band, Triple Mode (Drives External AMPS Discriminator)	70MHz to 300MHz

For pricing, delivery, and ordering information, please contact Maxim/Dallas Direct! at 1-888-629-4642, or visit Maxim's website at www.maxim-ic.com.

ABSOLUTE MAXIMUM RATINGS

V_{CC} to GND .....-0.3V to +6.0V
$\overline{SHDN}$ to GND .....-0.3V to (V_{CC} + 0.3V)
$\overline{STBY}$, $\overline{BUFEN}$, MODE, $\overline{EN}$, DATA, CLK, DIVSEL .....-0.3V to (V_{CC} + 0.3V)
VGC to GND .....-0.3V, the lesser of +4.2V or (V_{CC} + 0.3V)
AC Signals TANKH ±, TANKL ±, REF, FM ±, CDMA ± .....1.0V peak
Digital Input Current $\overline{SHDN}$, MODE, DIVSEL, $\overline{BUFEN}$, DATA, CLK, $\overline{EN}$, $\overline{STBY}$ .....±10mA
Continuous Power Dissipation (T_A = +70°C)
28-Pin QFN (derate 28.5mW/°C above T_A = +70°C) 2W
Operating Temperature Range .....-40°C to +85°C
Junction Temperature .....+150°C
Storage Temperature Range .....-65°C to +160°C
Lead Temperature (soldering, 10s) .....+300°C

Stresses beyond those listed under "Absolute Maximum Ratings" may cause permanent damage to the device. These are stress ratings only, and functional operation of the device at these or any other conditions beyond those indicated in the operational sections of the specifications is not implied. Exposure to absolute maximum rating conditions for extended periods may affect device reliability.

DC ELECTRICAL CHARACTERISTICS

(V_{CC} = +2.7V to +3.6V, MODE = DIVSEL = $\overline{SHDN}$ = $\overline{STBY}$ = $\overline{BUFEN}$ = high, differential output load = 10kΩ, T_A = -40°C to +85°C, registers set to default power-up settings. Typical values are at V_{CC} = +2.75V and T_A = +25°C, unless otherwise noted.)

PARAMETER	SYMBOL	CONDITIONS		MIN	TYP	MAX	UNITS
Supply Current (Note 1)	I_{CC}	CDMA mode	T_A = +25°C		25.9	37.5	mA
			T_A = -40°C to +85°C			41.5	
		FM_IQ mode	T_A = +25°C		25.4	36.7	
			T_A = -40°C to +85°C			40.6	
		FM_I mode	T_A = +25°C		24.7	35.7	
			T_A = -40°C to +85°C			39.5	
		STANDBY (VCO_H)	T_A = +25°C		12.3	18.8	
			T_A = -40°C to +85°C			20.7	
		STANDBY (VCO_L)	T_A = +25°C		11.4	18.4	
			T_A = -40°C to +85°C			20.3	
		Addition for LO out ($\overline{BUFEN}$ = low)			3.5		
Shutdown Current	I_{CC}	$\overline{SHDN}$ = low			1.5	10	µA
Register Shutdown Current	I_{CC}				4	5.8	mA
Logic High				2.0			V
Logic Low						0.5	V
Logic High Input Current	I_{IH}			2			µA
Logic Low Input Current	I_{IL}					2	µA
VGC Control Input Current		0.5V < V_{VGC} < 2.3V		-5		5	µA
VGC Control Input Current During Shutdown		$\overline{SHDN}$ = low				1	µA
Lock Indicator High (locked)		47kΩ load		2.0			V
Lock Indicator Low (unlocked)		47kΩ load				0.5	V
DC Offset Voltage		I+ to I- and Q+ to Q-, PLL locked		-20	±1.5	+20	mV
Common-Mode Output Voltage		V_{CC} = +2.75V			V_{CC} - 1.4		V

AC ELECTRICAL CHARACTERISTICS

(MAX2306/MAX2308/MAX2309 EV kit, V_{CC} = +2.75V, registers set to default power-up states except M1 = M2 = 306, R1 = R2 = 16, f_{IN} = 183.7MHz, f_{REF} = 19.2MHz, 0.6Vp-p synthesizer locked with passive 3rd-order lead-lag loop filter, $\overline{SHDN}$ = high, VGC set for +35dB voltage gain, differential output load = 10kΩ, all power levels referred to 50Ω, T_A = +25°C, unless otherwise noted.)

PARAMETER	SYMBOL	CONDITIONS		MIN	TYP	MAX	UNITS
Input Frequency	f_{IN}	(Note 2)		40		300	MHz
Reference Frequency	f_{REF}					39	MHz
Frequency Reference Signal Level	V_{REF}			0.2			Vp-p
SIGNAL PATH, CDMA MODE							
Input 3rd-Order Intercept	IIP3	Gain = -35dB, (Note 3)			3.4		dBm
		Gain = +35dB, T_A = -40°C to +85°C (Notes 4, 5)		-38	-31.0		
Input 1dB Compression	P_{1dB}	Gain = -35dB		-9			dBm
		Gain = +35dB		-44			
Input 0.25dB Desensitization		(Note 6)	Gain = -35dB		-14.8		dBm
			Gain = +35dB		-49		
Minimum Voltage Gain	A_V	V_{VGC} = 0.5V (Note 5)			-56	-51	dB
Maximum Voltage Gain	A_V	V_{VGC} = 2.3V (Note 5)		57	61		dB
DSB Noise Figure	NF	Gain = -35dB			62.9		dBm
		Gain = +35dB			6.36		
SIGNAL PATH, FM_IQ MODE							
Input 3rd-Order Intercept	IIP3	Gain = -35dB, (Note 7)			-6.5		dBm
		Gain = +35dB, T_A = -40°C to +85°C (Notes 5, 8)		-40.2	-32		
Input 1dB Compression	P_{1dB}	Gain = -35dB		-20			dBm
		Gain = +35dB		-44			
Minimum Voltage Gain	A_V	V_{VGC} = 0.5V (Note 5)			-56.7	-52	dB
Maximum Voltage Gain	A_V	V_{VGC} = 2.3V (Note 5)		56	59.5		dB
SIGNAL PATH, CDMA AND FM_IQ MODE							
Gain Variation Over Temperature		Normalized to +25°C			±2.5		dB
Baseband 0.5dB Bandwidth					4.2		MHz
Quadrature Suppression		T_A = -40°C to +85°C (Note 5)		28	40		dB
LO to Baseband Leakage					1		mVp-p
Saturated Output Level	V_{SAT}	Differential			2.7		Vp-p
PHASE-LOCKED LOOP							
VCO Tune Range	F_{VCO_L}	(Note 2)		80		300	MHz
	F_{VCO_H}	(Note 2)		135		600	
LO_OUT Output Power	P_{LO}	R_L = 50Ω, $\overline{BUFEN}$ = low			-13.7		dBm
VCO Minimum Divide Ratio	M1, M2					256	
VCO Maximum Divide Ratio	M1, M2			16383			
REF Minimum Divide Ratio	R1, R2					2	

AC ELECTRICAL CHARACTERISTICS (continued)

(MAX2306/MAX2308/MAX2309 EV kit, V_{CC} = +2.75V, registers set to default power-up states except M1 = M2 = 306, R1 = R2 = 16, f_{IN} = 183.7MHz, f_{REF} = 19.2MHz, 0.6Vp-p synthesizer locked with passive 3rd-order lead-lag loop filter, $\overline{SHDN}$ = high, VGC set for +35dB voltage gain, differential output load = 10kΩ, all power levels referred to 50Ω, T_A = +25°C, unless otherwise noted.)

PARAMETER	SYMBOL	CONDITIONS	MIN	TYP	MAX	UNITS
REF Maximum Divide Ratio	R1, R2		2047			
Minimum Phase Detector Comparison Frequency		(Note 5)			20	kHz
Maximum Phase Detector Comparison Frequency		(Note 5)	1500			kHz
Phase Noise		1kHz offset, T_A = -40°C to +85°C		-79.6		dBc/Hz
		12.5kHz offset, T_A = -40°C to +85°C		-94.6		
		30kHz offset, T_A = -40°C to +85°C		-105		
		120kHz offset, T_A = -40°C to +85°C		-115.3		
		900kHz offset, T_A = -40°C to +85°C		-125		
TURBO LOCK						
Charge-Pump Source/Sink Current		Acquisition, CPX = XX, TC =1	1480	2100	2650	µA
		Locked, CPX = 00	105	150	190	
		Locked, CPX = 01	150	210	265	
		Locked, CPX = 10	210	300	380	
		Locked, CPX = 11	300	425	530	
Charge-Pump Source/Sink Matching		Locked, all values of CPX, 0.5V < V_{CP} < V_{CC} - 0.5V		0.2	10	%

Note 1: FM_IQ and FM_I modes are not available on MAX2309.
Note 2: Recommended operating frequency range. Contact factory for operating frequency outside this range.
Note 3: f_1 = 183.7MHz, f_2 = 183.71MHz, P_{f1} = P_{f2} = -15dBm.
Note 4: f_1 = 183.7MHz, f_2 = 183.71MHz, P_{f1} = P_{f2} = -50dBm.
Note 5: Guaranteed by design.
Note 6: Small-signal gain at 200kHz below the LO frequency will be reduced by less than 0.25dB when an interfering signal at 1.25MHz below the LO frequency is applied at the specified level.
Note 7: f_1 = 183.7MHz, f_2 = 183.71MHz, P_{f1} = P_{f2} = -23dBm.
Note 8: f_1 = 183.7MHz, f_2 = 183.71MHz, P_{f1} = P_{f2} = -55dBm.

Typical Operating Characteristics

(MAX2306/MAX2308/MAX2309 EV kits, V_{CC} = +2.75V, registers set to default power-up states, f_{IN} = 183.7MHz, f_{REF} = 19.2MHz, synthesizer locked with passive 3rd-order lead-lag loop filter, $\overline{SHDN}$ = high, VGC set for +35dB voltage gain, differential output load = 10kΩ, all power levels referred to 50Ω, T_A = +25°C, unless otherwise noted.)

RECEIVE SUPPLY CURRENT vs. SUPPLY VOLTAGE

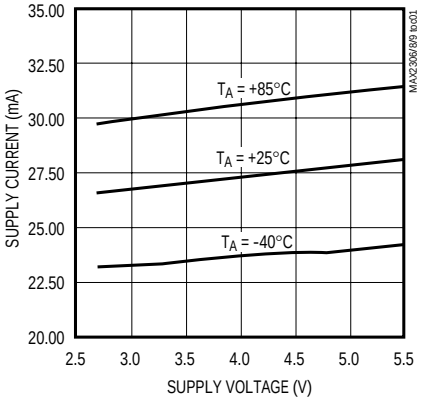

RECEIVE SHUTDOWN CURRENT vs. SUPPLY VOLTAGE

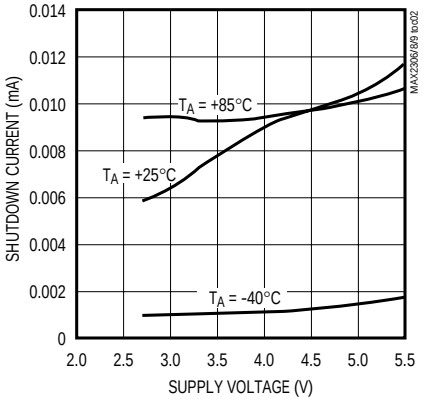

GAIN vs. V_{GC}

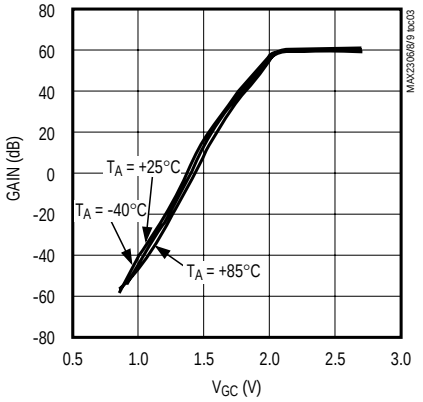

GAIN vs. INPUT FREQUENCY

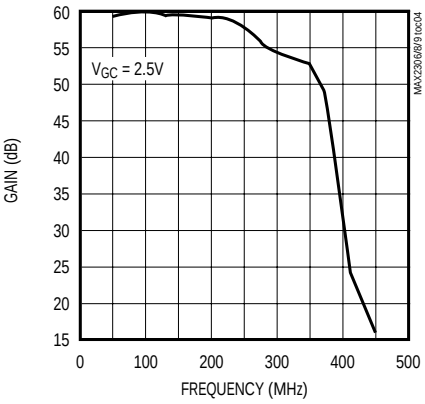

GAIN vs. BASEBAND FREQUENCY

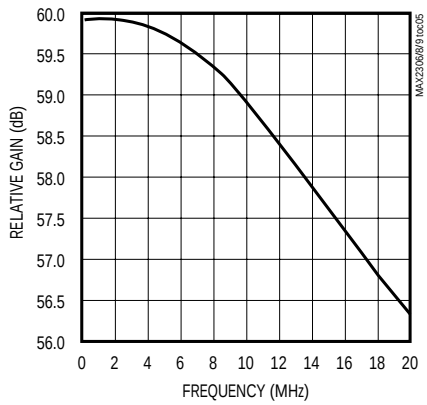

THIRD-ORDER INPUT INTERCEPT vs. GAIN

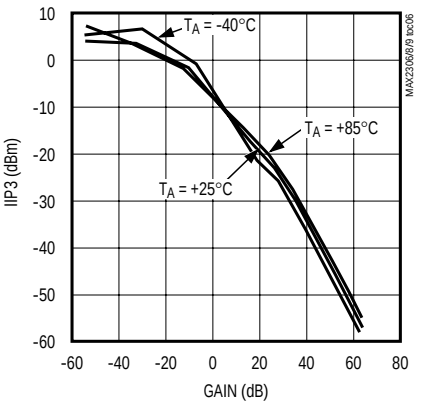

NOISE FIGURE vs. GAIN

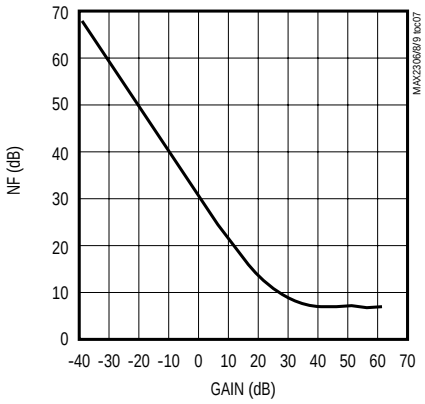

NOISE FIGURE vs. TEMPERATURE

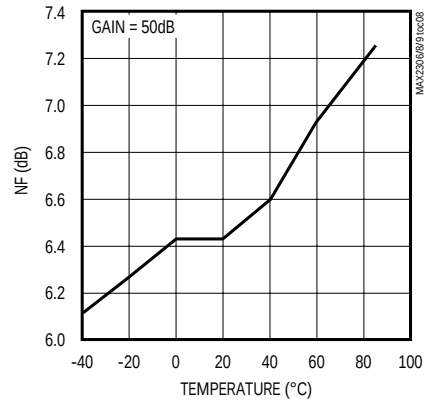

VCO VOLTAGE vs. TIME

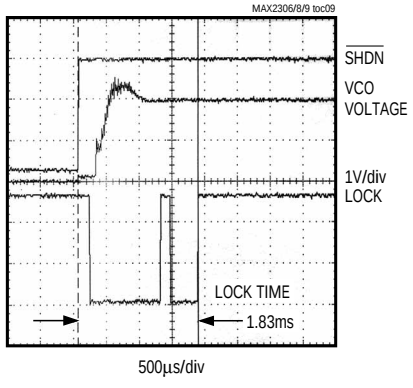

CDMA IF VGAs and I/Q Demodulators with VCO and Synthesizer

Typical Operating Characteristics (continued)

(MAX2306/MAX2308/MAX2309 EV kits, V_{CC} = +2.75V, registers set to default power-up states, f_{IN} = 183.7MHz, f_{REF} = 19.2MHz, synthesizer locked with passive 3rd-order lead-lag loop filter, $\overline{SHDN}$ = high, VGC set for +35dB voltage gain, differential output load = 10kΩ, all power levels referred to 50Ω, T_A = +25°C, unless otherwise noted.)

IF PORT PARALLEL RESISTANCE vs. FREQUENCY

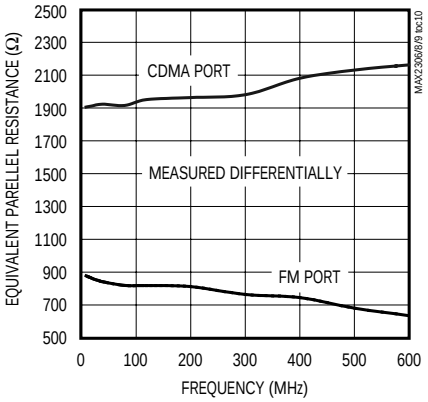

IF PORT PARALLEL CAPACITANCE vs. FREQUENCY

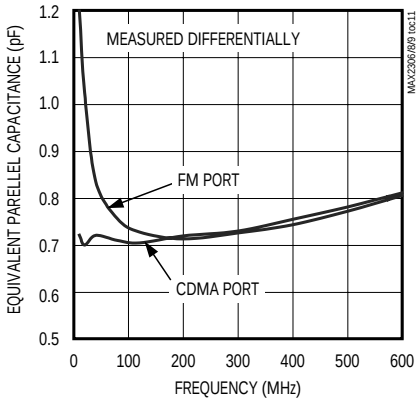

TANK PORT PARALLEL RESISTANCE vs. FREQUENCY

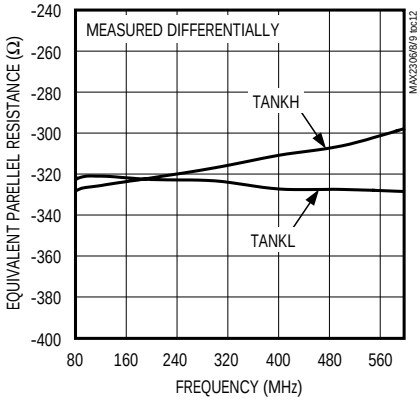

TANK PORT PARALLEL CAPACITANCE vs. FREQUENCY

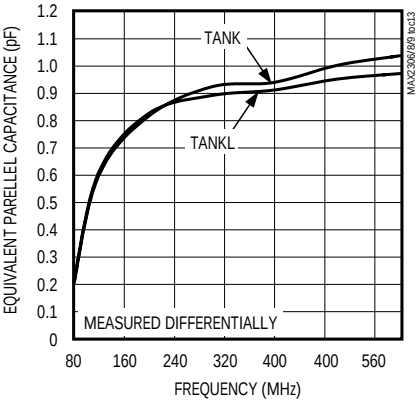

LOOUT PORT S11 vs. FREQUENCY

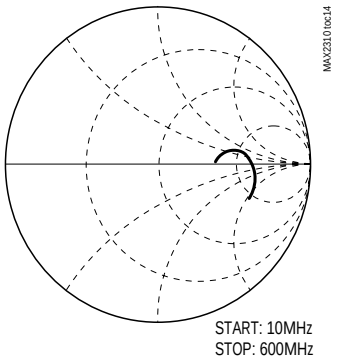

Pin Description

PIN			NAME	FUNCTION
MAX2306	MAX2308	MAX2309		
1, 28	—	—	TANKL+, TANKL-	Differential Tank Input for Low-Frequency Oscillator
—	1, 4	—	N.C.	No Connection. Must be left open-circuit.
2, 3	2, 3	1, 2	TANKH+, TANKH-	Differential Tank Input for High-Frequency Oscillator
—	—	3	$\overline{BUFEN}$	LO Buffer Amplifier—active low
4	—	—	MODE	Mode Select. High selects CDMA mode; low selects FM mode.
—	—	4	LOOUT	Internal VCO Output. Depending on setting of BD bit, LOOUT is either the VCO frequency (twice the IF frequency) or one-half the VCO frequency (equal to the IF frequency).
5	5	5	V_{CC}	+2.7V to +5.5V Supply
6	6	6	GND	Ground
7	7	7	REF	Reference Frequency Input
8	8	8	$\overline{SHDN}$	Shutdown Input—active low. Low powers down entire device, including registers and serial interface.
9, 10	9, 10	9, 10	IOUT+, IOUT-	Differential In-Phase Baseband Output, or FM signal output if FM_I mode is selected.
11	11	11	LOCK	Lock Output—open-collector pin. Logic high indicates phase-locked condition.
12, 13	12, 13	12, 13	QOUT-, QOUT+	Differential Quadrature-Phase Baseband Output. Disabled if FM_I mode is selected.
14	14	14	CLK	Clock input of the 3-wire serial bus
15	15	15	$\overline{EN}$	Enable Input. When low, input shift register is enabled.
16	16	16	DATA	Data input of the 3-wire serial bus.
17	17	17	V_{CC}	+2.7V to +5.5V Supply
18	18	18	VGC	VGA Gain Control Input. Control voltage range is 0.5V to 2.3V.
19, 20	19, 20	19, 20	CDMA-, CDMA+	Differential CDMA Input. Active in CDMA mode.
21	21	—	FM+	Differential Positive Input. Active in FM mode.
22	22	—	FM-	Differential Negative Input for FM signal. Bypass to GND for single-ended operation.
—	—	22	$\overline{STBY}$	Standby Input—active low. Low powers down VGA and demodulator while keeping VCO, PLL, and serial bus on.
23, 24	23, 24	23, 24	BYP	Bypass Node. Must be capacitively decoupled (bypassed) to pin 17.

CDMA IF VGAs and I/Q Demodulators with VCO and Synthesizer

Pin Description (continued)

PIN			NAME	FUNCTION
MAX2306	MAX2308	MAX2309		
25	25	25	BYP	Bypass Node. Must be capacitively decoupled (bypassed) to ground.
26	26	26	CP_OUT	Charge-Pump Output
27	27	27	GND	Ground
—	28	21	N.C.	No Connection
—	—	28	DIVSEL	High selects M1/R1; low selects M2/R2.
Exposed Paddle			EP	Ground

Detailed Description

MAX2306

The MAX2306 is intended for dual-band (PCS and cellular) and dual-mode code division multiple access (CDMA) and FM applications (Figure 1). The device includes an IF variable-gain amplifier, quadrature demodulator, dual VCOs, and dual-frequency synthesizers *(Functional Diagram*). Dual VCOs are provided for applications using different IF frequencies for each mode or band of operation. The analog FM output signal can be configured for conversion to the I channel, or it may be converted in quadrature to both the I and Q channels. The MAX2306's operation modes are described in Table 1. These modes are set by programming the control register and setting logic levels on control pins. If MODE is left floating, the internal register controls the operation. If driven high or low, mode will override certain register bits, as shown in Table 1.

MAX2308

The MAX2308 supports dual-band, triple mode with common IF VCO. As with the MAX2306, the FM mode can be configured for conversion to the I port or quadrature conversion to both the I and Q ports (Figure 2). The MAX2308's operational modes are described in Table 2. These modes are set by programming the control register.

MAX2309

The MAX2309 quadrature demodulators are simplified versions of the MAX2306 that can be used in single-mode CDMA or triple mode using an external FM discriminator (Figure 3). The MAX2309 VCO is optimized for the 67MHz to 300MHz IF frequency range.

The MAX2309 includes a buffered output for the VCO. The buffered VCO output can be used to support systems implementing traditional limiting IF stages for FM demodulation in dual-mode phones as well as for the transmit LO in TDD systems. This buffered output can be configured for the VCO frequency (twice the IF frequency) or one-half the VCO frequency (IF frequency). The $\overline{BUFEN}$ pin enables this feature. A standby mode, in which only the VCO and synthesizer are operational, can be selected through the serial interface or the $\overline{STBY}$ pin. The MAX2309's operational modes are described in Table 3. These modes are set by programming the control register and/or setting logic levels on control pins. If the control pins ($\overline{STBY}$, $\overline{BUFEN}$, DIVSEL) are left floating, the internal register controls the operational mode. If driven high or low, the control pins will override certain register bits, as shown in Table 3.

Applications Information

Variable-Gain Amplifier and Demodulator

The MAX2306 family provides a VGA with exceptional gain range. The MAX2306/MAX2308 support multimode applications with dual differential inputs, selectable with the IN_SEL (IS) control bit. On the MAX2306, this function can be controlled with the MODE pin, which overrides the IS control bit. The VGA's gain is controlled over a 110dB range with the VGC pin. The output of the VGA drives the RF ports of a quadrature demodulator. The MAX2306/MAX2308 provide two types of FM demodulation, controlled by the FM_TYPE (FT) control bit. When FM_TYPE is "1," the signal is passed through both the I and Q signal paths for subsequent lowpass filtering and A/D conversion at baseband. If FM_TYPE is "0," the FM signal is passed through the I mixer only.

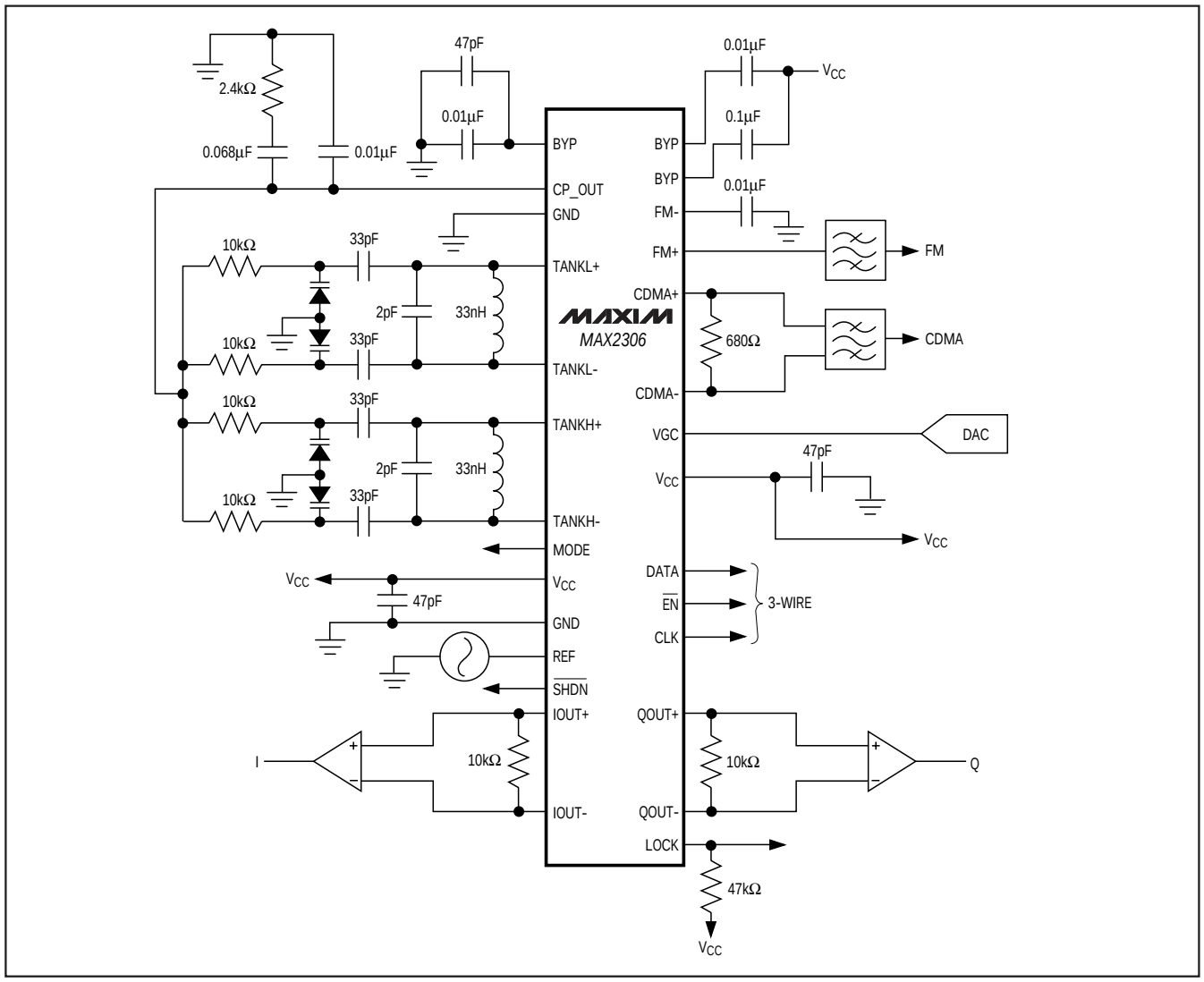

Figure 1. MAX2306 Typical Operating Circuit

Voltage-Controlled Oscillator, Buffers, and Quadrature Generation

The LO signal for downconversion is provided by a voltage-controlled oscillator (VCO) consisting of an on-chip differential oscillator, and an off-chip high-Q resonant network. Figure 4 shows a simplified schematic of the VCO oscillator. Multiband operation is supported by the MAX2306 with dual VCOs. VCO_H and VCO_L are selectable with the MODE pin or the VCO_SEL (VS) control bit. They oscillate at twice the desired LO frequency. For applications requiring an external LO, the VCOs can be bypassed with the VCO_BYP (VB) control bit.

The MAX2309 buffers the output of the VCO and provides this signal at the LOOUT pin. This signal is enabled by the $\overline{\text{BUFEN}}$ (BE) control bit or by the $\overline{\text{BUFEN}}$ control pin. The frequency of this signal is selected by the BUF_DIV (BD) control bit, and can be either the VCO frequency or half the VCO frequency.

Quadrature downconversion is realized by providing in-phase (I) and quadrature-phase (Q) components of the LO signal to the LO ports of the demodulator described above. The quadrature LO signals are generated by dividing the VCO output frequency using two latches.

Table 1. MAX2306 Control Register States

OPERATIONAL MODE	ACTION RESULT	PINS		CONTROL REGISTER (MSB → LSB)													
		$\overline{SHDN}$	$\overline{MODE}$	TEST_MODE	CP POL	TEST_EN	TURBOCHARGE	DIVSEL	VCO_BYP	VCO_SEL	BUF_DIV	$\overline{BUFEN}$	FM_TYPE	IN_SEL	$\overline{STBY}$	$\overline{SHDN}$
SHUTDOWN	Shutdown pin completely powers down the chip	L	X	X	X	X	X	X	X	X	X	X	X	X	X	X
SHUTDOWN	0 in shutdown register bit leaves serial port active	H	X	X	X	X	X	X	X	X	X	X	X	X	X	0
STANDBY	0 in standby register bit turns off VGA and modulator only	H	X	X	X	0					X	X			0	1
CDMA	Mode pin overrides VCO_SEL, DIVSEL, and IN_SEL to high	H	H			0		X		X	X	X	X	X	1	1
CDMA	Floating mode pin returns control to register	H	F			0		1		1	X	X	X	1	1	1
FM_IQ	Mode pin overrides VCO_SEL, DIVSEL, and IN_SEL to low	H	L			0		X		X	X	X	0	X	1	1
FM_IQ	Floating mode pin returns control to register	H	F			0					X	X	0	0	1	1
FM_I	Mode pin overrides VCO_SEL, DIVSEL, and IN_SEL to low	H	L			0		X		X	X	X	1	X	1	1
FM_I	Floating pins return control to register	H L	F			0					X	X	1	0	1	1

Note: *H = high, L = low, F = floating pin, X = don't care, Blank = independent parameter, 1 = logic high, 0 = logic low.*

The appropriate latch outputs provide I and Q signals at the desired LO frequency.

Synthesizer

The VCO's output frequency is controlled by an internal phase-locked-loop (PLL) dual-modulus synthesizer. The loop filter is off-chip to simplify loop design for emerging applications. The tunable resonant network is also off-chip for maximum Q and for system design flexibility. The VCO output frequency is divided down to the desired comparison frequency with the M counter. The M counter consists of a 4-bit A swallow counter and a 10-bit P counter. A reference signal is provided from an external source and is divided down to the comparison frequency with the R counter. The two divided signals are compared with a three-state digital phase-frequency detector. The phase-detector output drives a charge-pump as well as lock-detect logic and turbocharge control logic. The charge-pump output (CP_OUT) pin is processed by the loop filter and drives the tunable resonant network, altering the VCO frequency and closing the loop.

Multimode applications are supported by two independent programmable registers each for the M counter (M1, M2), the R counter (R1, R2), and the charge-pump output current magnitude (CP1, CP2). The DIVSEL (DS) bit selects which set of registers is used. It can be overridden by the MAX2306's MODE pin or the MAX2309's DIVSEL pin. Programming these registers is discussed in the *3-Wire Interface and Registers* section.

Table 2. MAX2308 Control Register States

OPERATIONAL MODE	ACTION RESULT	PIN	MSB	CONTROL REGISTER												LSB
		$\overline{SHDN}$	TEST_MODE	CP_POL	TEST_EN	TURBOCHARGE	DIVSEL	VCO_BYP	VCO_SEL	BUF_DIV	$\overline{BUFEN}$	FM_TYPE	IN_SEL	$\overline{STBY}$	$\overline{SHDN}$
SHUTDOWN	Shutdown pin completely shuts down chip	L	X	X	X	X	X	X	X	X	X	X	X	X	X
SHUTDOWN	0 in shutdown register bit leaves serial port active	H	X	X	X	X	X	X	X	X	X	X	X	X	L
STANDBY	0 in standby pin turns off VGA and modulator only	H			0				0	X	X			0	1
CDMA	CDMA operation	H			0				0	X	X	X	1	1	1
FM_IQ	FM IQ quadrature operation	H			0				0	X	X	0	0	1	1
FM_I	FM I operation	H			0				0	X	X	1	0	1	1

Note: *H = high, L = low, 1 = logic high, 0 = logic low, X = don't care, blank = independent parameter*

When the part initially powers up or changes state, the synthesizer acquisition time can be reduced by using the Turbo feature, enabled by the TURBOCHARGE (TC) control bit. Turbo functionality provides a larger charge-pump current during acquisition mode. Once the VCO frequency is acquired, the charge-pump output current magnitude automatically returns to the preprogrammed state to maintain loop stability and minimize spurs in the VCO output signal.

The lock detect output indicates when the PLL is locked with a logic high.

3-Wire Interface and Registers

The MAX2306 family incorporates a 3-wire interface for synthesizer programming and device configuration (Figure 5). The 3-wire interface consists of clock, data, and enable signals. It controls the VCO dividers (M1 and M2), reference frequency dividers (R1 and R2), and a 13-bit control register. The control register is used to set up the operational modes (Table 4). The input shift is 17 data bits long and requires a total of 18 clock bits (Figure 6). A single clock pulse is required before enable drops low to initialize the data bus.

Whenever the M or R divide register value is programmed and downloaded, the control register must also be subsequently updated. This prevents turbolock from going active when not desired.

The $\overline{SHDN}$ control bit is notable because it differs from the $\overline{SHDN}$ pin. When the $\overline{SHDN}$ control bit is low, the registers and serial interface are left active, retaining the values stored in the latches, while the rest of the device is shut off. In contrast, the $\overline{SHDN}$ pin, when low, shuts down everything, including the registers and serial interface. See *Functional Diagram*.

Registers

Figure 7 shows the programming logic. The 17-bit shift register is programmed by clocking in data at the rising edge of CLK. Before the shift register is able to accept data, it must be initialized by driving it with at least one full clock cycle at the CLK input with $\overline{EN}$ high (see Figure 6). Pulling enable low will allow data to be clocked into the shift register; pulling enable high loads the register addressed by A0, A1, and A2, respectively (Figure 7). Table 5 lists the power-on default values of all registers. Table 6 lists the charge-pump current, depending on CP0 and CP1.

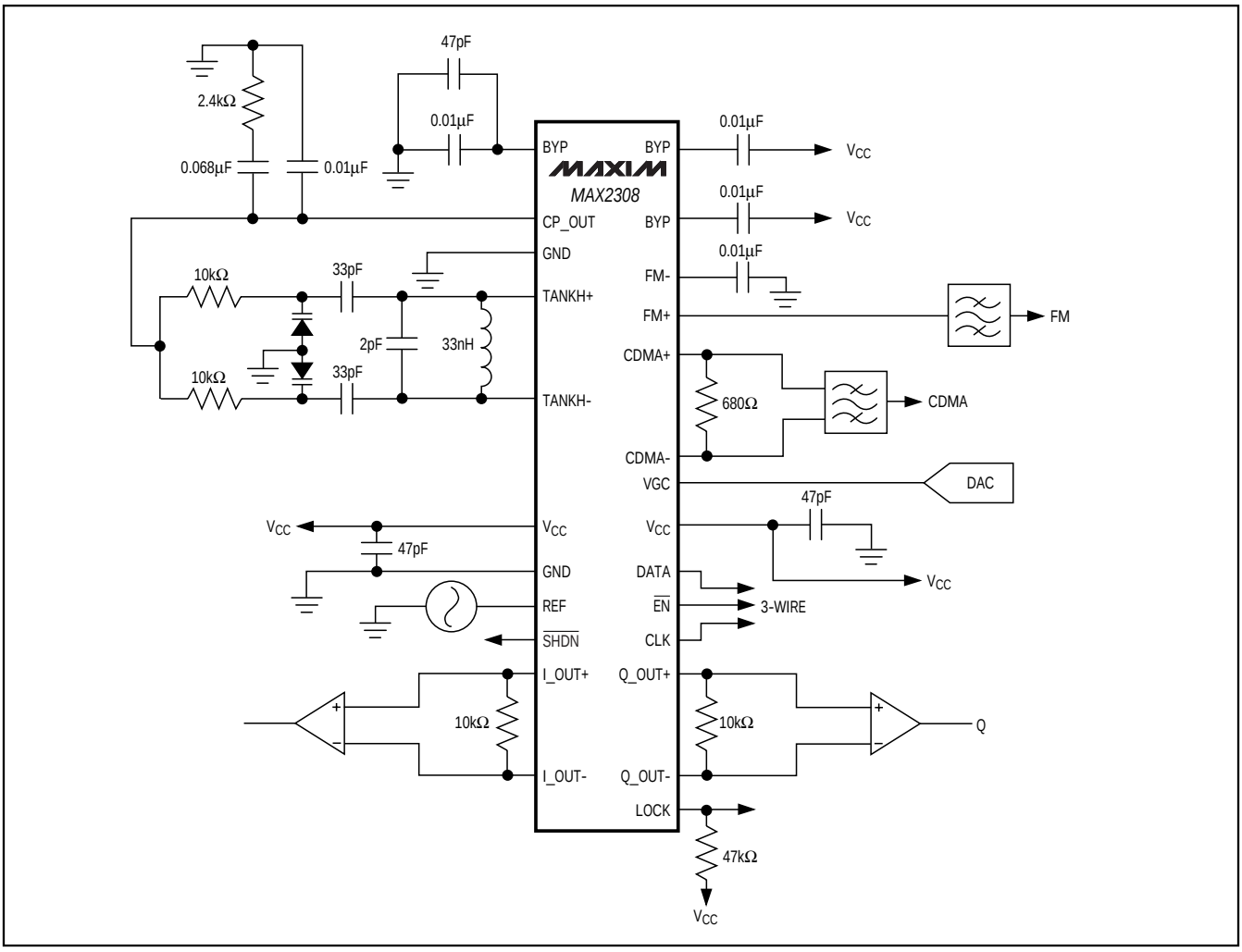

Figure 2. MAX2308 Typical Operating Circuit

Table 3. MAX2309 Control Register States

OPERATIONAL MODE	ACTION RESULT	PINS				MSB CONTROL REGISTER												LSB
		$\overline{SHDN}$	DIVSEL	$\overline{BUFEN}$	$\overline{STBY}$	TEST_MODE	CP_POL	TES_TEN	TURBOCHARGE	DIVSEL	VCO_BYP	VCO_SEL	BUF_DIV	$\overline{BUFEN}$	FM_TYPE	IN_SEL	$\overline{STBY}$	$\overline{SHDN}$
SHUTDOWN	Shutdown pin completely powers down the chip	L	X	X	X	X	X	X	X	X	X	X	X	X	X	X	X	X
SHUTDOWN	0 in shutdown register bit leaves serial bus active	H	X	X	X	X	X	X	X	X	X	X	X	X	X	X	X	0
STANDBY	0 in standby pin turns off VGA and modulator only	H			L			0				X					X	1
STANDBY	0 in standby register bit turns off VGA and modulator only	H	H/L	H				0				X					0	1
DIVIDER SELECT	DIVSEL pin overrides DIVSEL register bit	H	H/L		H			0		X		X						1
DIVIDER SELECT	If DIVSEL pin is floated, then register bit selects divider	H	F		H			0		1/0		X						1
LO BUFFER ENABLE	$\overline{BUFEN}$ pin controls the LO buffer and overrides the bit	H/L		H				0				X		X				1
LO BUFFER ENABLE	If pin is floated, then $\overline{BUFEN}$ register bit controls buffer	H		F				0				X		1/0				1

Note: *H = high, L = low, 1 = logic high, 0 = logic low, X = don't care, blank = independent parameter.*

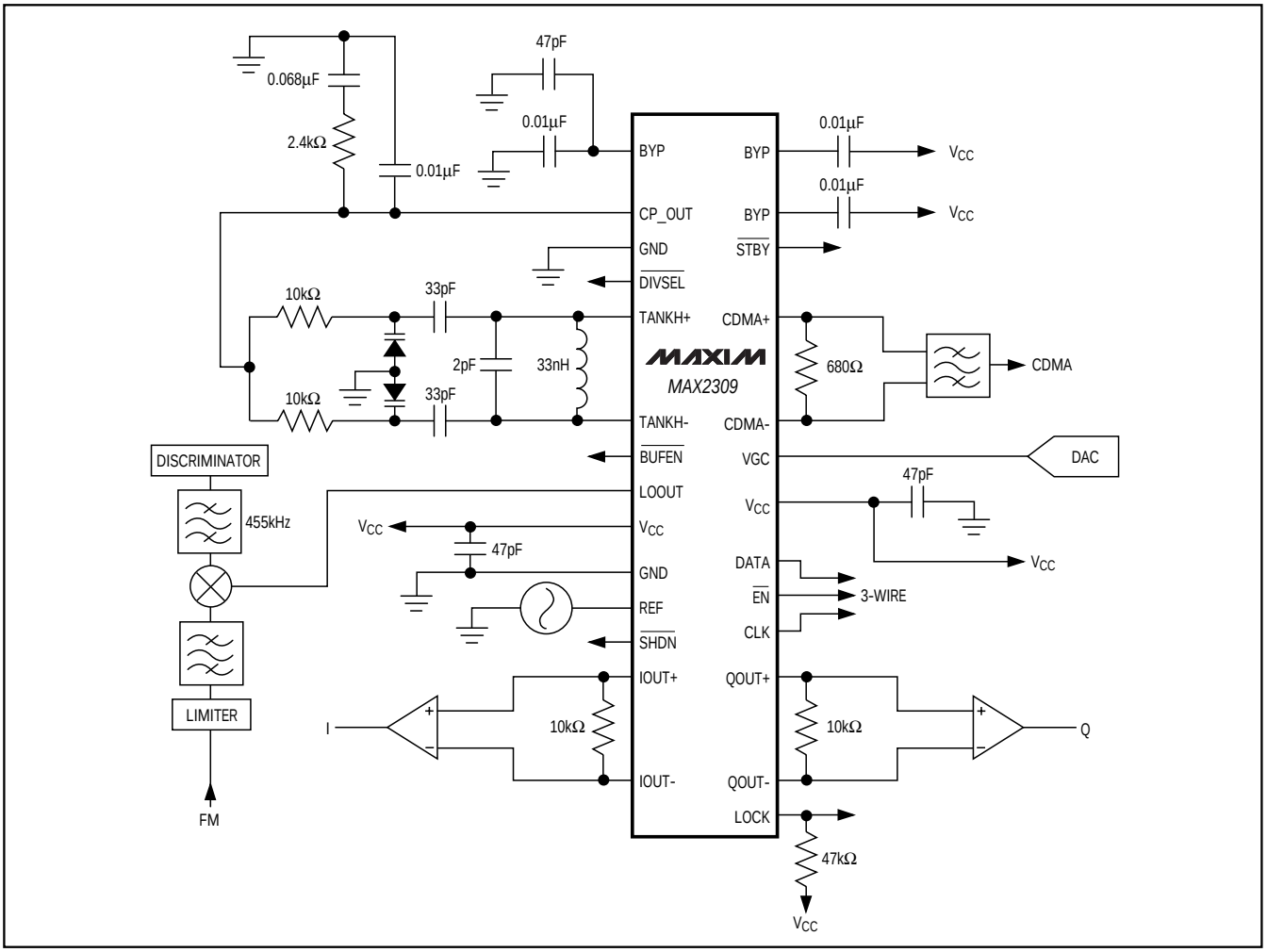

Figure 3. MAX2309 Typical Operating Circuit

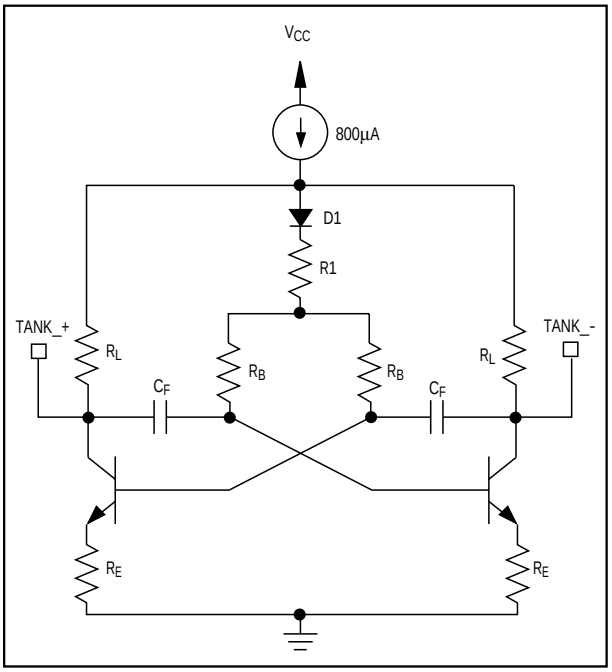

Figure 4. Voltage-Controlled Oscillators

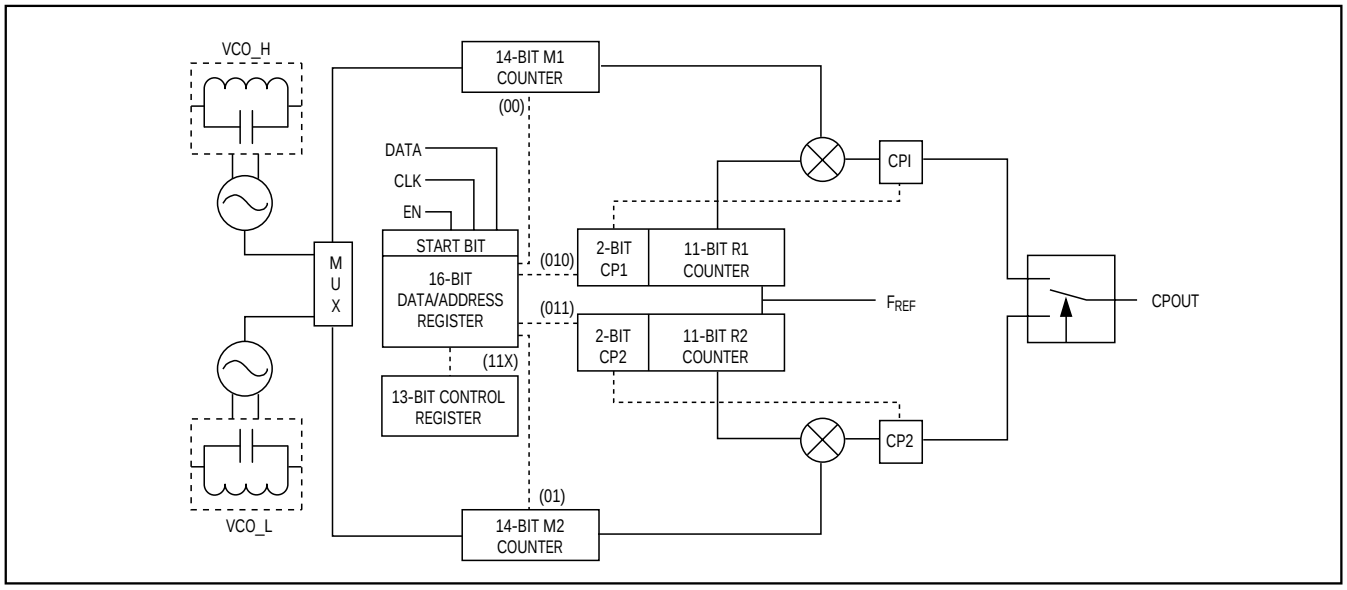

Figure 5. 3-Wire Control Block Diagram

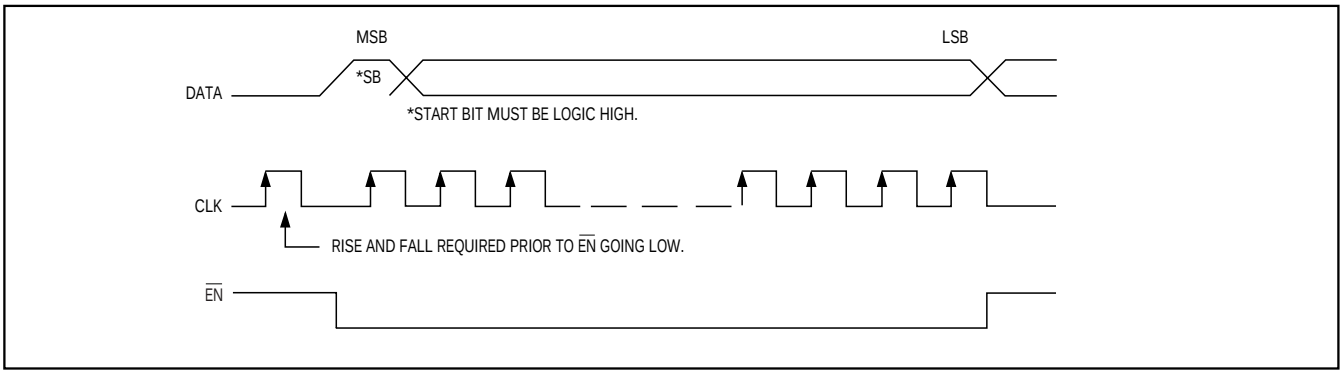

Figure 6. 3-Wire Interface Timing Diagram

Table 4. Control Register, Default State: $0B57_h$, Address: 110_b

BIT ID	BIT NAME	POWER-UP STATE	BIT LOCATION 0 = LSB	FUNCTION
TM	TEST_MODE	0	12	Must be 0 for normal operation.
POL	CP_POL	1	11	Logic “1” causes the charge-pump output CP_OUT to source current when $f_{REF}/R > f_{VCO}/M$. This state is used when the VCO tune polarity is such that increasing voltage produces increasing frequency. Logic “0” causes CP_OUT to source current when $f_{VCO}/M > f_{REF}/R$. This state is used when increasing tune voltage causes the VCO frequency to decrease.
TE	TEST_ENABLE	0	10	Must be 0 for normal operation.
TC	TURBO_CHARGE	1	9	Logic “1” activates turbocharge mode, which provides rapid frequency acquisition in the PLL.
DS	DIV_SEL	1	8	Logic “1” selects M1/R1 divide ratios. Logic “0” selects M2/R2.
VB	VCO_BYP	0	7	Logic “1” bypasses the VCO inputs for external VCO operation.
VS	VCO_SEL	1	6	Logic “1” selects VCO_H. Logic “0” selects VCO_L.
BD	BUF_DIV	0	5	Logic “1” selects divide-by-2 on LOOUT port. Logic “0” bypasses divider.
BE	$\overline{\text{BUFEN}}$	1	4	Logic “1” disables LOOUT. Logic “0” enables LOOUT.
FT	FM_TYPE	0	3	Active in FM mode. Logic “0” selects quadrature demodulator for FM mode. Logic “1” selects downconversion to I port.
IS	IN_SEL	1	2	Logic “0” selects FM input port. Logic “1” selects CDMA input.
SB	$\overline{\text{STBY}}$	1	1	Logic “0” enables standby mode, which shuts down the VGA and demodulator stages, leaving the VCO locked and the registers active.
SD	$\overline{\text{SHDN}}$	1	0	Logic “0” enables register-based shutdown. This mode shuts down everything except the M and R latches and the serial bus.

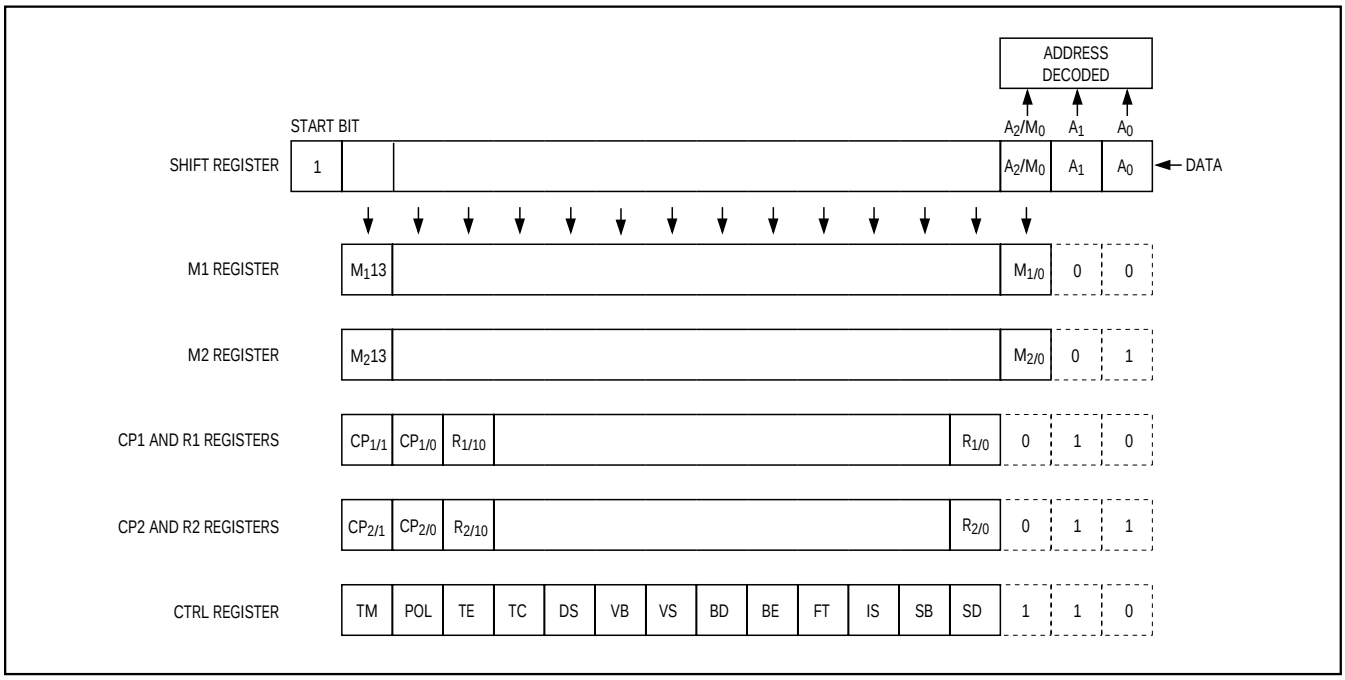

Figure 7. Programming Logic

Table 5. Register Defaults

REGISTER	DEFAULT
M1	10519_{DEC}
M2	4269_{DEC}
R1	492_{DEC}
R2	492_{DEC}
CTRL	$0B57_{HEX}$
CP0	11_{BIN}
CP1	11_{BIN}

Table 6. Charge-Pump Control Bits

CP1	CP0	CHARGE-PUMP CURRENT AFTER ACQUISITION (µA)
0	0	150
0	1	210
1	0	300
1	1	425

Chip Information

TRANSISTOR COUNT: 6422

CDMA IF VGAs and I/Q Demodulators with VCO and Synthesizer

Functional Diagram

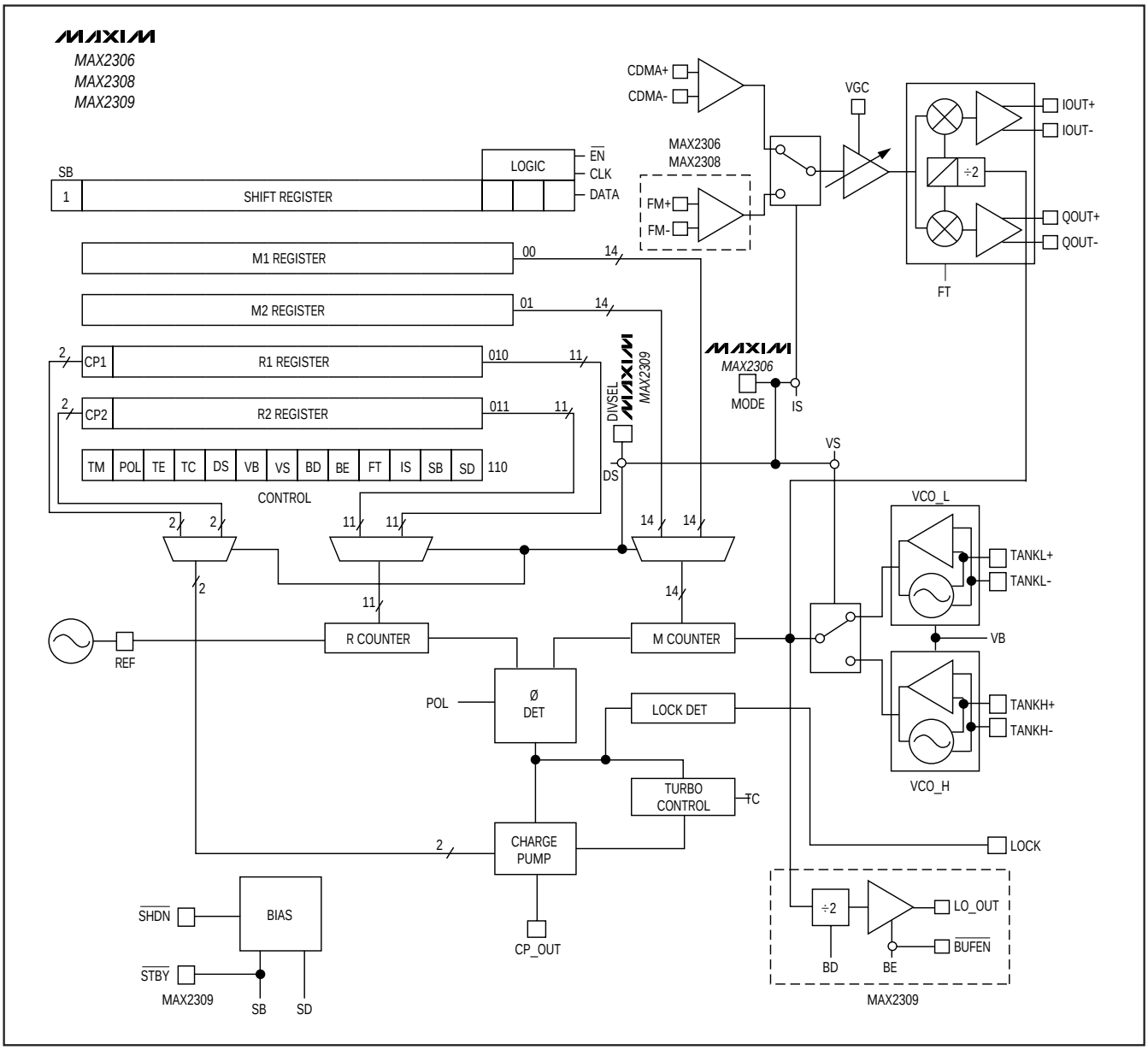

Block Diagram

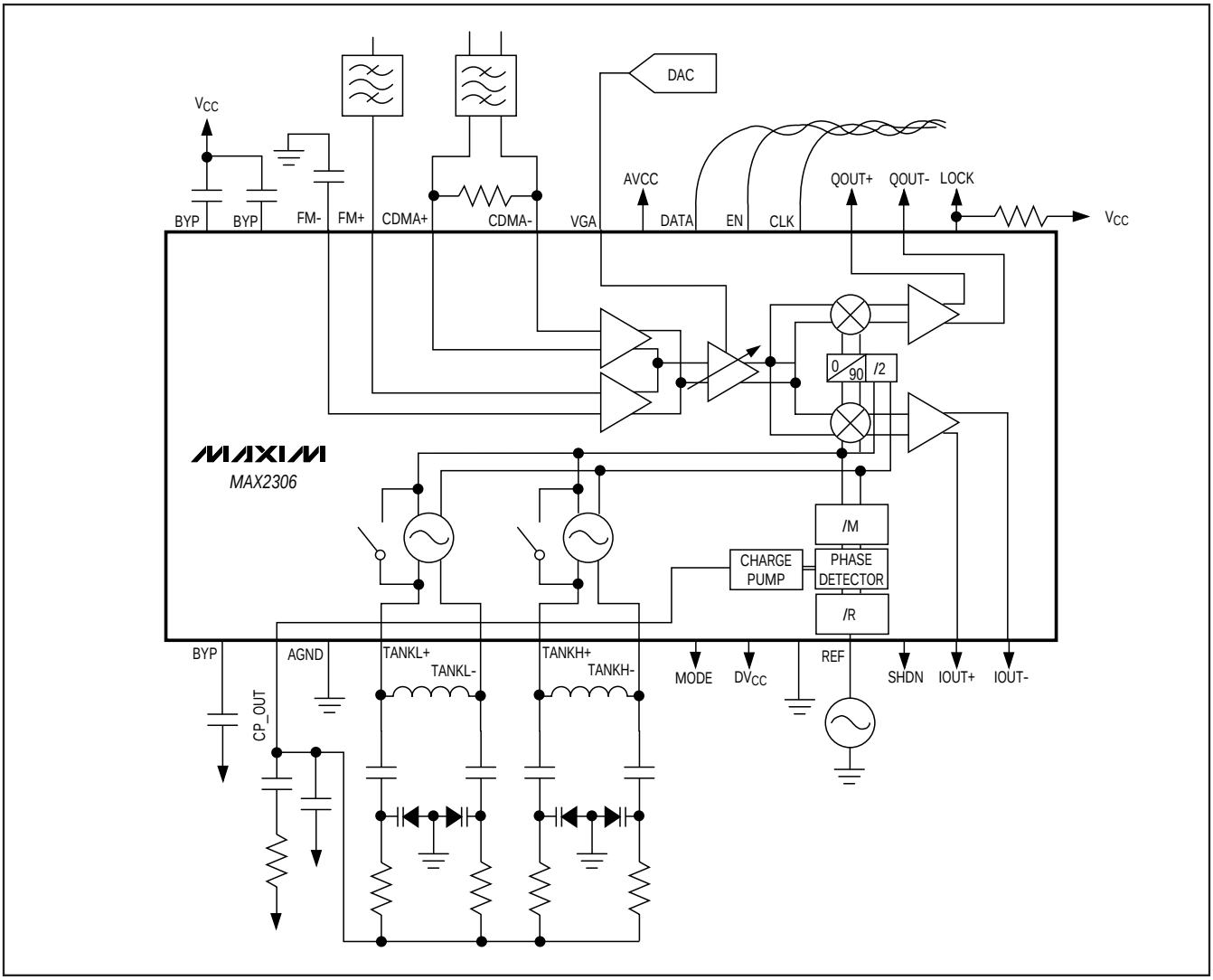

CDMA IF VGAs and I/Q Demodulators with VCO and Synthesizer

Pin Configurations

TOP VIEW

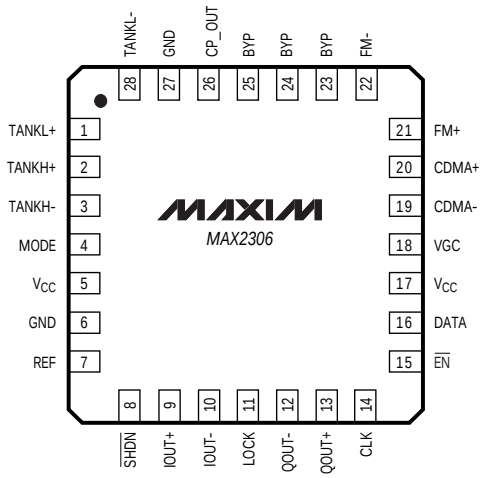

(T) QFN-EP

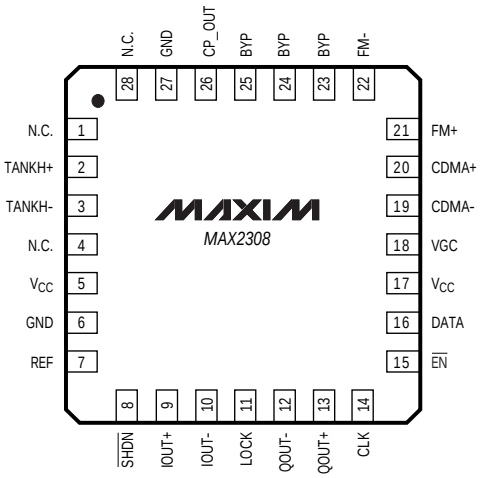

(T) QFN-EP

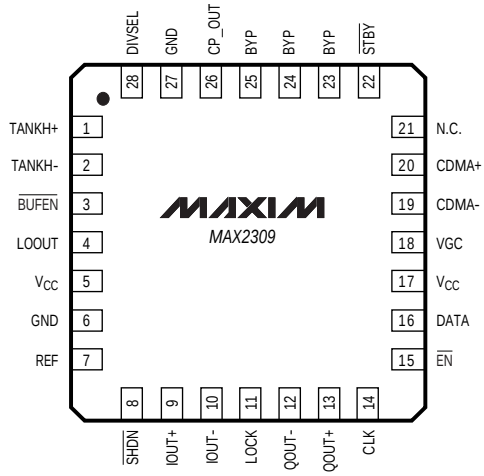

(T) QFN-EP

Package Information

For the latest package outline information, go to **www.maxim-ic.com/packages**.

Maxim cannot assume responsibility for use of any circuitry other than circuitry entirely embodied in a Maxim product. No circuit patent licenses are implied. Maxim reserves the right to change the circuitry and specifications without notice at any time.

© 2004 Maxim Integrated Products Printed USA MAXIM is a registered trademark of Maxim Integrated Products.