*Click **here** to ask an associate for production status of specific part numbers.*

MAX25210

Automotive Ultra Low Quiescent Current Linear Regulator Family

General Description

The MAX25210 high-voltage linear regulator family is ideal for use in automotive and battery-operated systems. The device operates from a +3.5V to +36V input voltage, delivers up to 300mA of load current, and consumes only 10µA of typical quiescent current at no load. The device consumes only 2µA (typ) current when in shutdown. The input is +42V transient tolerant and is designed to operate under load-dump conditions. The MAX25210 can be configured as either fixed output voltage (+3.3V or +5V) or adjustable output voltage using an external resistive divider.

The MAX25210 features an open-drain, active-low $\overline{\text{RESET}}$ output with fixed thresholds offered at 93.5% and 87.5% of the output voltage. The $\overline{\text{RESET}}$ output remains low for a fixed period of 60µs after the output voltage exceeds its threshold. The $\overline{\text{RESET}}$ delay can be extended with an external capacitor.

The MAX25210 includes an enable input, short-circuit protection, and thermal shutdown. The MAX25210 operates over the -40°C to +125°C automotive temperature range.

The regulators are available in a space-saving, thermally enhanced, 3mm x 3mm, 8-pin TDFN package.

Applications

- Automotive
- Telecom
- Industrial

Benefits and Features

- Enables System Designers to Meet Stringent Module Requirements for 100µA Quiescent Current
  - Low 10µA Quiescent Current
  - 300mA Output-Current Capability (300mA, 200mA, 100mA, and 50mA Variants)
  - User-Selectable Output Voltage (+3.3V or +5V Fixed and +0.6V to +11V Adjustable with External Resistive Divider)
- Tiny Output Capacitors Reduce Board Space and BOM Cost
  - Stable Operation with 2.2µF Output Capacitor
- Accurate $\overline{\text{RESET}}$ Output with Adjustable Delay Eliminates Need for Separate Reset IC
  - Open-Drain $\overline{\text{RESET}}$ Output with Adjustable Delay
  - Fixed-Reset Threshold Options: 87.5% or 93.5%
- Operates Through Cold-Crank Conditions
  - Low-Dropout Voltage of 280mV at 200mA
  - +3.5V to +36V Wide Input Voltage Range, +42V Tolerant
- Robust Performance in Automotive Environment
  - Thermal and Short-Circuit Protection
  - High-Voltage Enable Input (+42V)
  - -40°C to +125°C Automotive Temperature Range
  - Automotive Qualified AEC-Q100

Simplified Block Diagram

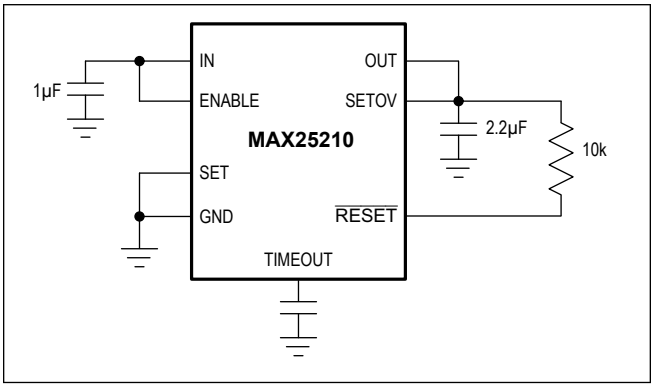

Ordering Information appears at end of data sheet.

19-100810; Rev 4; 10/21

© 2021 Analog Devices, Inc. All rights reserved. Trademarks and registered trademarks are the property of their respective owners.

One Analog Way, Wilmington, MA 01887 U.S.A. | Tel: 781.329.4700 | © 2021 Analog Devices, Inc. All rights reserved.

TABLE OF CONTENTS

General Description . . . 1
Applications . . . 1
Benefits and Features . . . 1
Simplified Block Diagram . . . 1
Absolute Maximum Ratings . . . 3
Package Information . . . 3
8 TDFN 3mm x 3mm . . . 3
Electrical Characteristics . . . 3
Typical Operating Characteristics . . . 6
Pin Configuration . . . 8
8 TDFN-EP . . . 8
Pin Description . . . 8
Functional Diagrams . . . 9
Functional Block Diagram . . . 9
Detailed Description . . . 10
Fixed-Output-Voltage Mode . . . 10
Adjustable-Output-Voltage Mode . . . 10
Output Short-Circuit Current Limit . . . 10
RESET Output . . . 10
Timeout . . . 10
ENABLE . . . 10
Thermal Protection . . . 11
Applications Information . . . 12
Output-Capacitor Selection and Regulator Stability . . . 12
Exposed Pad . . . 12
Selecting Timeout Capacitor . . . 12
Typical Application Circuits . . . 13
Circuit 1 . . . 13
Circuit 2 . . . 14
Ordering Information . . . 15
Revision History . . . 16

Absolute Maximum Ratings

IN_H to GND ..... -0.3V to +42V
ENABLE to GND ..... -0.3V to +42V
OUT to GND ..... -0.3V to +12V
SET to GND ..... -0.3V to +42V
RESET to GND ..... -0.3V to +42V
SETOV to GND ..... -0.3V to +6V
Timeout to GND ..... -0.3V to +6V

Maximum Current (all pins except IN and OUT) 50mA
Continuous Power Dissipation (T_A = +70°C) TDFN (Multilayer board) (TDFN (derate 24.4mW/°C above +70°C)).....1951mW
Operating Junction Temperature .....-40°C to +150°C
Junction Temperature .....+150°C
Storage Temperature Range .....-65°C to +150°C
Lead Temperature (soldering 10s).....+300°C

Stresses beyond those listed under "Absolute Maximum Ratings" may cause permanent damage to the device. These are stress ratings only, and functional operation of the device at these or any other conditions beyond those indicated in the operational sections of the specifications is not implied. Exposure to absolute maximum rating conditions for extended periods may affect device reliability.

Package Information

8 TDFN 3mm x 3mm

Package Code	T833+2C
Outline Number	21-0137
Land Pattern Number	90-0059
Thermal Resistance, Single-Layer Board:	
Junction to Ambient (θ_{JA})	54°C/W
Junction to Case (θ_{JC})	8°C/W
Thermal Resistance, Four-Layer Board:	
Junction to Ambient (θ_{JA})	41°C/W
Junction to Case (θ_{JC})	8°C/W

For the latest package outline information and land patterns (footprints), go to ***www.maximintegrated.com/packages***. Note that a "+", "#", or "-" in the package code indicates RoHS status only. Package drawings may show a different suffix character, but the drawing pertains to the package regardless of RoHS status.

Package thermal resistances were obtained using the method described in JEDEC specification JESD51-7, using a four-layer board. For detailed information on package thermal considerations, refer to ***www.maximintegrated.com/thermal-tutorial***.

Electrical Characteristics

(V_{IN_H} = V_{ENABLE} = +14V, C_{IN} = 1µF, C_{OUT} = 2.2µF, T_J = -40°C to +150°C, unless otherwise noted. Typical values are TA = +25°C (Note 1).)

PARAMETER	SYMBOL	CONDITIONS	MIN	TYP	MAX	UNITS
Electrical Characteristics Table						
Supply Voltage Range	V_{IN_H}	Continuous	3.5		36	V
		For ≤ 1s			42	
Supply UVLO	$V_{UVLO_Falling}$	(MAX25210ATAB8U/V+)	1.9	2.2		V
Supply Current		I_{LOAD} = 0mA, SET = GND, V_{OUT} = 5V (-40°C ≤ T_J ≤ +125°C)		10	29	µA
		I_{LOAD} = 0mA, SET = GND, V_{OUT} = 5V (T_J = +150°C)			38	
Shutdown Supply Current	I_{SHDN}	ENABLE = GND, T_A = +25°C		2	3	µA
		ENABLE = GND, T_J = +150°C		7		

Electrical Characteristics (continued)

(V_{IN_H} = V_{ENABLE} = +14V, C_{IN} = 1µF, C_{OUT} = 2.2µF, T_J = -40°C to +150°C, unless otherwise noted. Typical values are TA = +25°C (Note 1).)

PARAMETER	SYMBOL	CONDITIONS	MIN	TYP	MAX	UNITS
Output Voltage (5V Fixed Output Setting)	V_{OUT50}	MAX25210ATAA_/V+ ONLY, 1mA ≤ I_{LOAD} ≤ 300mA, V_{IN} = 6V to 30V, C_{OUT} = 2.2µF (Note 2)	4.9	5.0	5.1	V
	V_{OUT50}	1mA ≤ I_{LOAD} ≤ 200mA, V_{IN} = 6V to 30V, C_{OUT} = 2.2µF (Note 2)	4.9	5	5.1	
	V_{OUT50}	1mA ≤ I_{LOAD} ≤ 50mA, V_{IN} = 6V to 30V, C_{OUT} = 2.2µF, T_J = +150°C (Notes 2, 3)	4.9	5	5.1	
Output Voltage (3.3V Fixed Output Setting)	V_{OUT33}	MAX25210ATAA_/V+ ONLY, 1mA ≤ I_{LOAD} ≤ 300mA, V_{IN} = 6V to 30V, C_{OUT} = 2.2µF (Note 2)	3.234	3.3	3.366	V
		1mA ≤ I_{LOAD} ≤ 200mA, V_{IN} = 4.8V to 30V, C_{OUT} = 2.2µF (Note 2)	3.234	3.3	3.366	
		1mA ≤ I_{LOAD} ≤ 50mA, V_{IN} = 4.8V to 30V, C_{OUT} = 2.2µF, T_J = +150°C (Notes 2, 3)	3.234	3.3	3.366	
Adjustable Output Voltage Range	V_{OUT}	C_{OUT} = 15µF	0.6		1.5	V
Adjustable Output-Voltage Range	V_{OUT}	C_{OUT} = 10µF	1.5		11.0	V
SETOV FB Voltage	V_{SETOV}	I_{LOAD} = 1mA (Note 3)	0.588	0.600	0.612	V
Dropout Voltage from IN_H (Note 4)	ΔV_{DO}	I_{LOAD} = 300mA, SET = GND, SETOV = HIGH, $V_{OUT(NORM)}$ = +5V		450	770	mV
		I_{LOAD} = 200mA, SET = GND, SETOV = HIGH, $V_{OUT(NORM)}$ = +5.0V		300	500	
		I_{LOAD} = 50mA, SET = GND, SETOV = HIGH, $V_{OUT(NORM)}$ = +5.0V, T_J =150°C (Notes 2, 3)			130	
Output Current Limit	I_{SC}	(MAX25210ATAA_/V+) 300mA option	330	400		mA
		(MAX25210ATAB_/V+) 200mA option	230	330		
		(MAX25210ATAC_/V+) 100mA option	115	165		
		(MAX25210ATAD_/V+) 50mA option	58	88		
Thermal Shutdown		(Note 5)		170		°C
Thermal Shutdown Hysteresis		(Note 5)		20		°C
Line Regulation (5V Fixed Output Setting)		V_{IN} = 6V to 30V, I_{LOAD} = 1mA		1		mV
Line Regulation (3.3V Fixed Output Setting)		V_{IN} = 4.8V to 30V, I_{LOAD} = 1mA		1		mV
Load Regulation (5V Fixed Output Setting)		I_{LOAD} = 1mA to 200mA		12		mV
Load Regulation (3.3V Fixed Output Setting)		I_{LOAD} = 1mA to 200mA		12		mV
Power-Supply Rejection Ratio	PSRR	I_{LOAD} = 10mA, f = 100Hz, 500mV_{P-P} (Note 5)		60		dB
Startup Response Time	t_{START}	Rising edge of V_{IN} to V_{OUT}, I_{LOAD} = 50mA (Note 5)		520		µs

Electrical Characteristics (continued)

(V_{IN_H} = V_{ENABLE} = +14V, C_{IN} = 1µF, C_{OUT} = 2.2µF, T_J = -40°C to +150°C, unless otherwise noted. Typical values are TA = +25°C (Note 1).)

PARAMETER	SYMBOL	CONDITIONS	MIN	TYP	MAX	UNITS
TIMEOUT Ramp Current	I_{TO}	TIMEOUT connected to GND	0.6	1	1.65	µA
TIMEOUT Ramp Delay				1.25		ms/nF
$\overline{RESET}$ Default Timeout Period		V_{OUT} rising, TIMEOUT = OPEN		60		µs
$\overline{RESET}$ Threshold		MAX25210__9/V+ V_{OUT} falling	92	93.5	95	% of V_{OUT}
		MAX25210__8/V+ V_{OUT} falling	86	87.5	89	
$\overline{RESET}$ Threshold Hysteresis		V_{OUT} rising		5		% of V_{OUT}
OUT to $\overline{RESET}$ Delay		V_{OUT} falling (Note 5)		4		µs
$\overline{RESET}$ Output-Voltage Low (Open-Drain)	V_{OL}	I_{SINK} = 0.5mA, $\overline{RESET}$ asserted			0.4	V
$\overline{RESET}$ Open-Drain Leakage Current		$\overline{RESET}$ not asserted, $\overline{RESET}$ = 36V, T_A = +25°C			1	µA
		$\overline{RESET}$ not asserted, $\overline{RESET}$ = 36V, T_J = +150°C		1		
ENABLE Logic-Low	V_{IL}				0.4	V
ENABLE Logic-High	V_{IH}		2.4			V
ENABLE Pulldown Current		(Note 6)		0.25		µA
SET Input Leakage Current		SET = HIGH, V_{SETOV} = 5V or SET = GND, V_{SETOV} = 5V		1		µA
SET Logic-Low	V_{ILSET}				0.4	V
SET Logic-High	V_{IHSET}		2.4			V
SETOV Input Current (All Modes)		T_A = +25°C	-50		50	nA
		T_J = +150°C		0.2		µA
SETOV Low-Level Input Voltage	$V_{ILSETOV}$	SET = GND, V_{SETOV} < $V_{ILSETOV}$ or places device in +3.3V fixed output-voltage mode			0.4	V
SETOV High-Level Input Voltage	$V_{IHSETOV}$	SET = GND, V_{SETOV} > $V_{IHSETOV}$ or places device in +5V fixed output-voltage mode	V_{OUT} - 0.4			V

Note 1: Production tested at T_A = +25°C. Overtemperature limits are guaranteed by ATE characterization between -40°C ≤ T_J ≤ +150°C, unless otherwise noted. Thermally limited, not all combinations of input voltage and current are tested.

Note 2: Observe the absolute maximum power dissipation limits.

Note 3: Specification characterized up to +150°C operating junction temperature. Limits are guaranteed by bench characterization.

Note 4: Dropout voltage is defined as (V_{IN} - V_{OUT}) when V_{OUT} is 2% below the value of V_{OUT} for V_{IN} = V_{OUT} + 3V.

Note 5: Not production tested.

Note 6: ENABLE is internally pulled to GND.

Note 7: The device is designed for continuous operation up to T_J = +125°C for 95,000 hours and T_J = +150°C for 5,000 hours.

Typical Operating Characteristics

(V_{IN_H} = V_{ENABLE} = +14V, C_{IN} = 1µF, C_{OUT} = 2.2µF, T_J = -40°C to +150°C, unless otherwise noted. Typical values are T_A = +25°C.)

SUPPLY CURRENT vs. TEMPRATURE

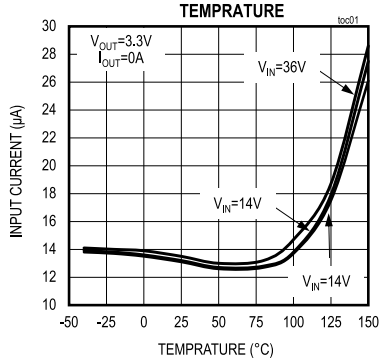

GND CURRENT vs. LOAD CURRENT (3.3V OUTPUT)

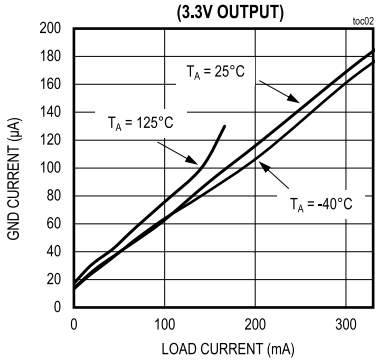

RESET THRESHOLD VOLTAGE vs. TEMPRATURE

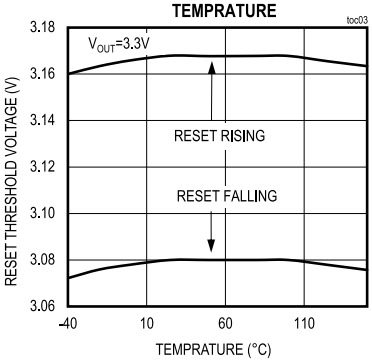

DROPOUT VOLTAGE vs. LOAD CURRENT (3.3V OUTPUT)

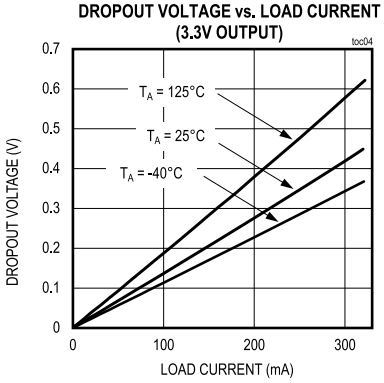

OUTPUT VOLTAGE vs. SUPPLY VOLTAGE

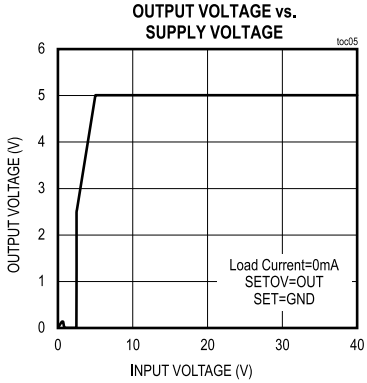

OUTPUT VOLTAGE vs. SUPPLY VOLTAGE

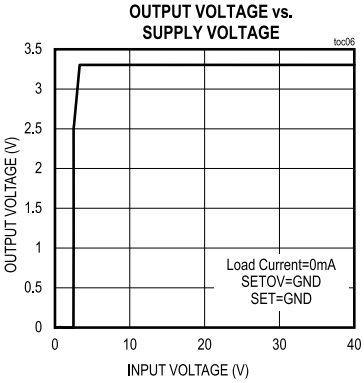

OUTPUT VOLTAGE vs. TEMPERATURE

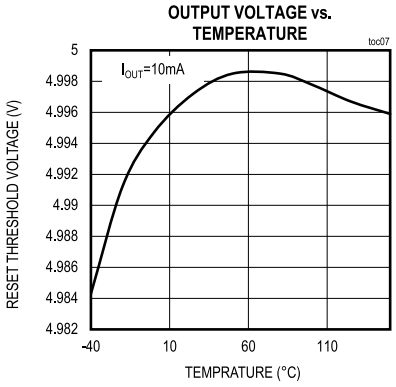

RESET THRESHOLD VOLTAGE vs. TEMPERATURE

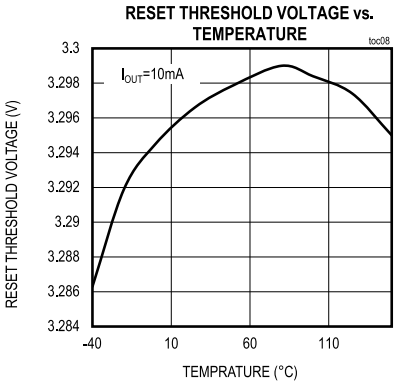

RESET THRESHOLD VOLTAGE vs. TEMPERATURE

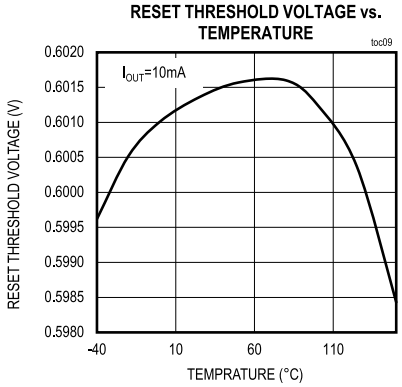

Typical Operating Characteristics (continued)

(V_{IN_H} = V_{ENABLE} = +14V, C_{IN} = 1µF, C_{OUT} = 2.2µF, T_J = -40°C to +150°C, unless otherwise noted. Typical values are T_A = +25°C.)

RESET TIMEOUT PERIOD vs. TEMPERATURE

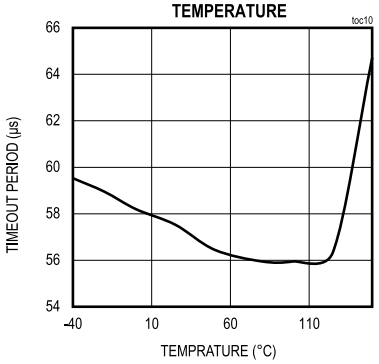

POWER SUPPLY REJECTION RATIO vs. FREQUENCY

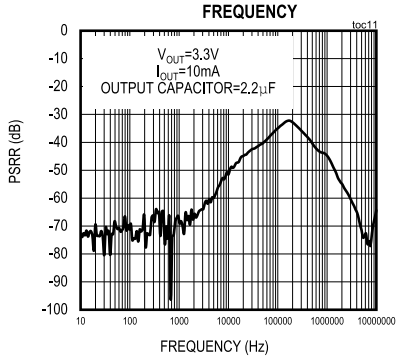

POWER SUPPLY REJECTION RATIO vs. FREQUENCY

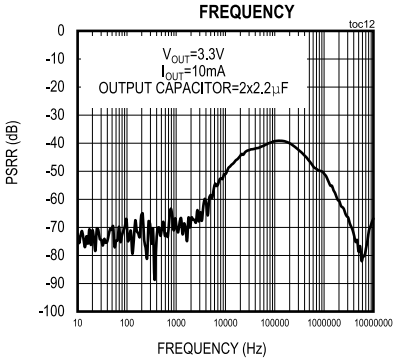

OUTPUT VOLTAGE vs. LOAD

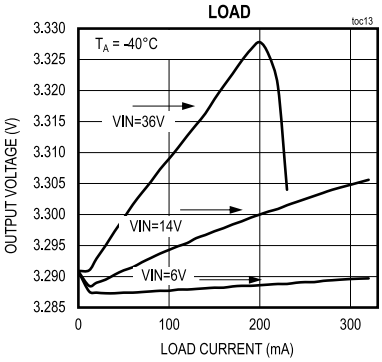

OUTPUT VOLTAGE vs. LOAD

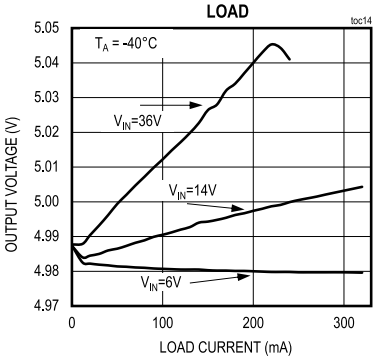

OUTPUT VOLTAGE vs. LOAD

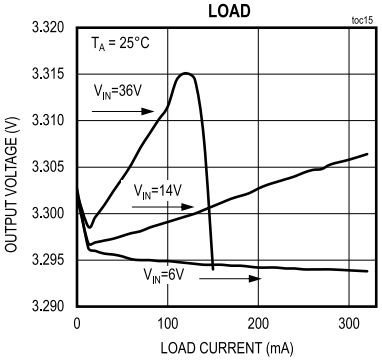

OUTPUT VOLTAGE vs. LOAD

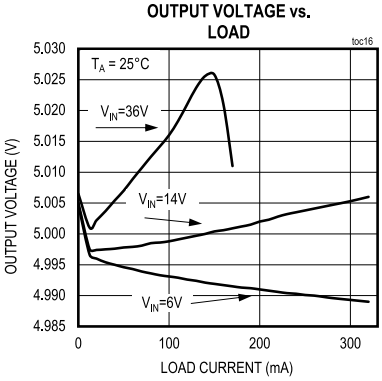

OUTPUT VOLTAGE vs. LOAD

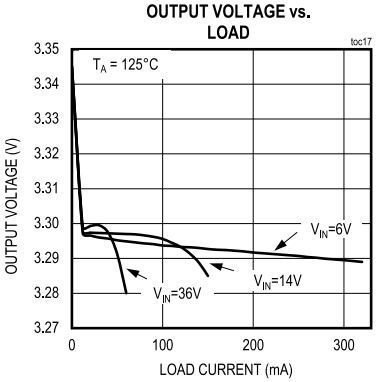

OUTPUT VOLTAGE vs. LOAD

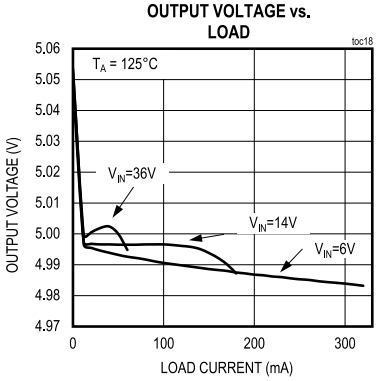

Pin Configuration

8 TDFN-EP

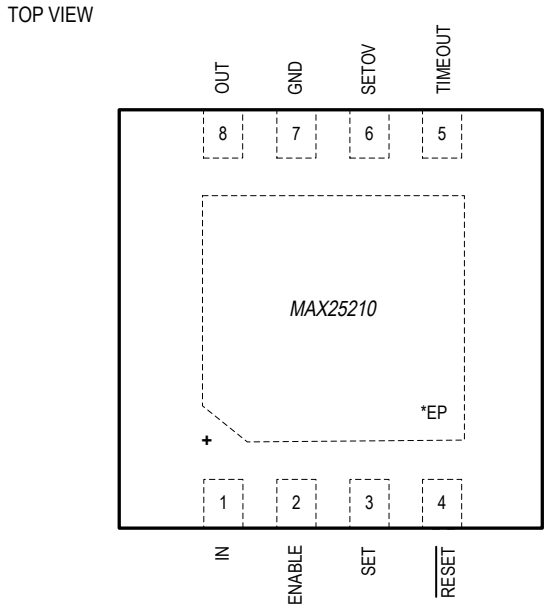

TDFN-EP
3mm x 3mm

Pin Description

PIN	NAME	FUNCTION
1	IN	Regulator Input. Bypass IN to GND with a 1µF (min) low-ESR ceramic capacitor.
2	EN	Active-High Enable Input. Force ENABLE high (or connect to IN) to turn the regulator on. Pull ENABLE low (or leave unconnected) to place the device in a low-power shutdown mode. ENABLE is internally pulled down to GND through a 0.25µA current sink.
3	SET	Feedback Network Selector. Connect SET to GND when operating the MAX25210 in fixed output voltage mode (3.3V or 5V) using the internal feedback network. Connect SET to IN or any voltage higher than 2.4V when an external feedback network (resistive divider) is used, operating the MAX25210 in adjustable output-voltage mode.
4	$\overline{\text{RESET}}$	Active-Low, Open-Drain Reset Output. $\overline{\text{RESET}}$ asserts low when OUT is below the reset threshold, and remains low for the duration of the reset timeout period after the reset conditions end. $\overline{\text{RESET}}$ also asserts low when ENABLE is low and during thermal shutdown. The pullup voltage on the $\overline{\text{RESET}}$ pin must be greater than 1.5V.
5	TIMEOUT	Reset-Timeout-Period Adjust Input. Internal capacitance produces a 60µs default delay when TIMEOUT is left unconnected. Connect a capacitor from TIMEOUT to GND to set a longer timeout period than default.
6	SETOV	Regulated Output-Voltage Selector. Connect SETOV to OUT for a 5V fixed output, or connect SETOV to GND for a 3.3V fixed output. SETOV becomes the feedback path when using an external resistive divider for an adjustable output. If SETOV pin driven externally, 1kΩ resistor in series is required.
7	GND	Ground

Pin Description (continued)

PIN	NAME	FUNCTION
8	OUT	Regulator Output. Bypass OUT to GND with a minimum of 2.2µF. Use a low-ESR, ceramic capacitor (X7R, X5R) for optimal performance. The SETOV input controls the output voltage when in fixed +3.3V or fixed +5V output-voltage mode. Using an external resistive divider between OUT and SETOV sets adjustable output voltage from +0.6V to +11V.

Functional Diagrams

Functional Block Diagram

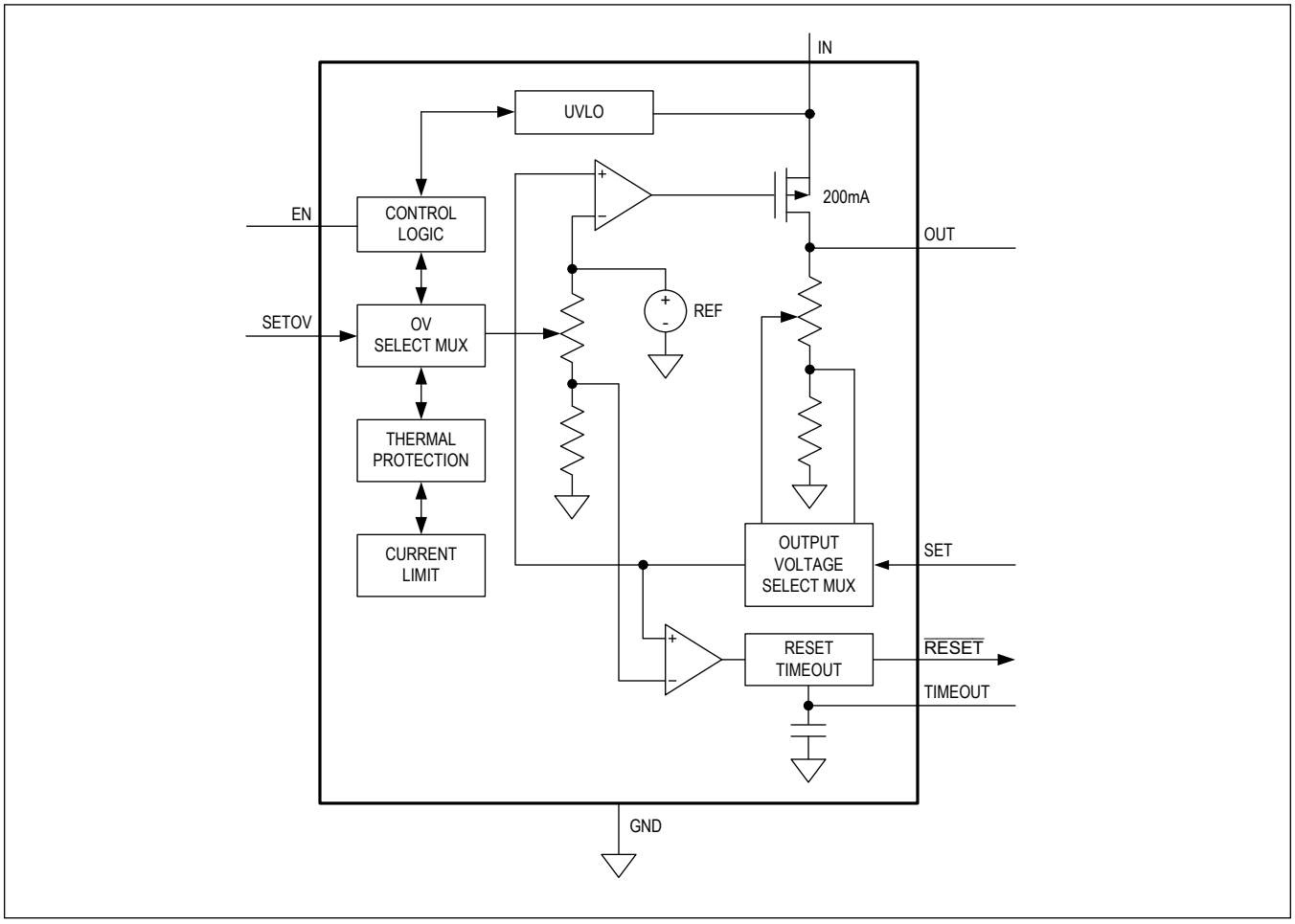

Detailed Description

The MAX25210 low-quiescent-current, high-voltage linear regulator family is ideal for use in automotive and battery-operated systems. The device operates from an input voltage of +3.5V to +36V, delivers up to 300mA of load current, and consumes only 10µA of quiescent current at no load. The input is +42V tolerant and is designed to operate under load-dump conditions. The MAX25210 can be user configured as either a fixed output voltage (+3.3V or +5V) or an adjustable output voltage using an external resistive voltage divider.

The MAX25210 features an open-drain, active-low $\overline{\text{RESET}}$ output with fixed thresholds offered at 93.5% and 87.5% of the output voltage. The $\overline{\text{RESET}}$ output remains low for a delay period of 60µs after the output voltage fault is cleared. The $\overline{\text{RESET}}$ delay can be extended with an external capacitor. The MAX25210 includes an enable input, short-circuit protection and thermal shutdown.

Fixed-Output-Voltage Mode

The SET and SETOV inputs determine the output mode. For the 5V fixed-output-voltage mode (see the 5V fixed-output circuit in *Typical Application Circuits*), connect SET to GND and SETOV to OUT. For the 3.3V fixed-output-voltage mode (see the 3.3V fixed-output circuit in *Typical Application Circuits*), connect SET to GND and SETOV to GND.

Adjustable-Output-Voltage Mode

For the adjustable-output-voltage mode (see the adjustable output circuit in *Typical Application Circuits*), connect SET to IN or a voltage > 2.4V and connect SETOV to a resistive voltage divider R1 and R2 between OUT and GND. An output voltage between 0.6V and 11V can be selected using the following equation:

$V_{OUT} = V_{SETOV} \times (1 + R1/R2)$ where $V_{SETOV} = 0.6V$ and R2 should be less than or equal to 110kΩ.

In order to increase the phase margin in applications with an external resistor-divider, a feed-forward capacitor in parallel with the top resistor-divider is recommended.

Output Short-Circuit Current Limit

The MAX25210 has four current-limit options: 400mA, 330mA, 165mA, and 88mA (typ). The output can be shorted to GND continuously without damage to the device. During a short circuit, the power dissipated across the pass transistor can quickly heat the device. When the die temperature reaches +170°C, the MAX25210 turns off the pass transistor and automatically restarts after the die temperature has cooled by 20°C.

$\overline{\text{RESET}}$ Output

The MAX25210 features an active-low, open-drain reset output. Once the monitored output voltage exceeds the reset threshold voltage, the $\overline{\text{RESET}}$ output goes low as long as the fault persists. After the fault is cleared, $\overline{\text{RESET}}$ remains low for the reset timeout period and then goes high. $\overline{\text{RESET}}$ also asserts low when ENABLE is low and during thermal shutdown. The pullup voltage on the $\overline{\text{RESET}}$ pin must be greater than 1.5V.

Timeout

The MAX25210 includes a reset timeout period adjustable input. The internal capacitance produces a 60µs default delay when TIMEOUT is left unconnected. Connect a capacitor from TIMEOUT to GND to set a higher timeout period than default. Use the following formula to determine the reset timeout capacitor:

$C_{TIMEOUT} = 0.8 \times I_{TO} \times T_{TIMEOUT}$

where $C_{TIMEOUT}$ is in nF, ITO is in µA, and $T_{TIMEOUT}$ is in ms.

For example, if I_{TO} is 1µA, $C_{TIMEOUT}$ must be 8nF to obtain a 10ms delay.

ENABLE

ENABLE is an active-high, logic-level enable input that turns the device on or off. Drive ENABLE high to turn the device on. An internal 0.25µA pulldown current keeps the MAX25210 in shutdown mode when driven by an open-drain driver, or by a three-state driver in high-impedance mode. When in shutdown, the MAX25210 consumes only 2µA (typ). ENABLE withstands voltages up to 42V, allowing it to be driven by high-input level voltages or connected to IN for always-on

operation.

Thermal Protection

The MAX25210 features thermal protection. When the junction temperature exceeds +170°C, an internal thermal sensor turns off the pass transistor and allows the device to cool. The thermal sensor turns on the pass transistor again after the junction temperature cools by 20°C. This results in a cycled output during continuous thermal-overload conditions. Thermal protection protects the MAX25210 in the event of fault conditions. For continuous operation, do not exceed the absolute maximum junction temperature rating of +150°C.

Applications Information

Output-Capacitor Selection and Regulator Stability

For stable operation over the full temperature range, with fixed 3.3V and 5.0V output voltages, use a low-ESR 2.2µF capacitor. For resistor-programmed output voltages, a 10µF low-ESR ceramic capacitor is recommended for stable operation. Use larger output-capacitor values (such as 22µF) to reduce noise while improving load-transient response and power-supply rejection. Some ceramic dielectrics exhibit large capacitance and ESR variations with temperature. To improve power-supply rejection and transient response, use a capacitor larger than the minimum 1µF capacitor between IN and GND.

Exposed Pad

The MAX25210 features an exposed thermal pad on its underside that should be used as a heatsink. This pad lowers the package's thermal resistance by providing a direct heat-conduction path from the die to the PCB. Connect the exposed pad and GND to the system ground using a large pad or ground plane, or multiple vias to the ground plane layer.

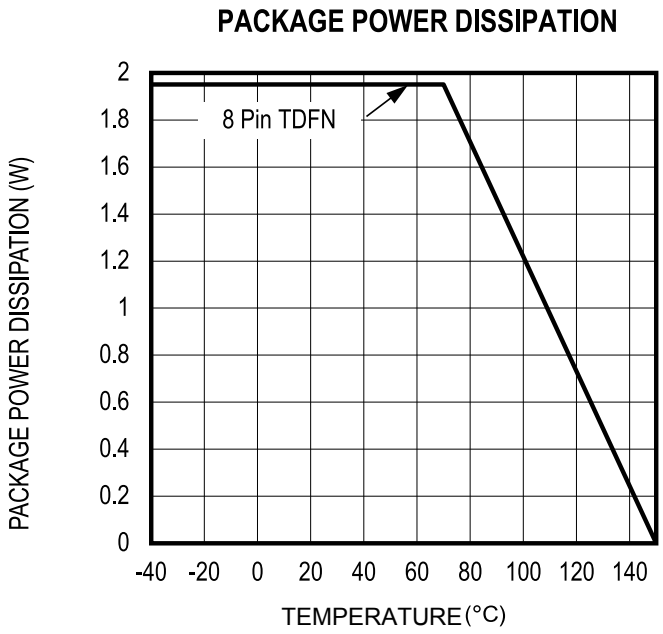

Selecting Timeout Capacitor

The reset timeout period is adjustable to accommodate a variety of microprocessor applications. Adjust the reset timeout period by connecting a capacitor between TIMEOUT and GND.

$t_{RP} = (1.25\times C_{TIMEOUT})/I_{TO}$

where tRP is in ms and CTIMEOUT is in nF. Leave TIMEOUT unconnected to select the internally fixed timeout period. $C_{TIMEOUT}$ must be a low-leakage (< 10nA) type capacitor. Ceramic capacitors are recommended. To avoid the influence of parasitic capacitances, do not use capacitor values lower than 100pF.

Typical Application Circuits

Circuit 1

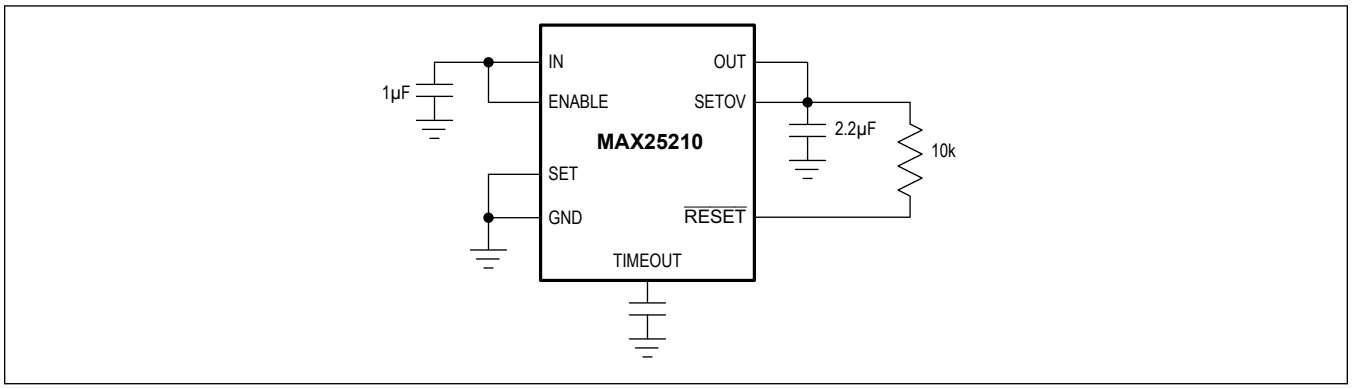

Typical Application Circuits (continued)

Circuit 2

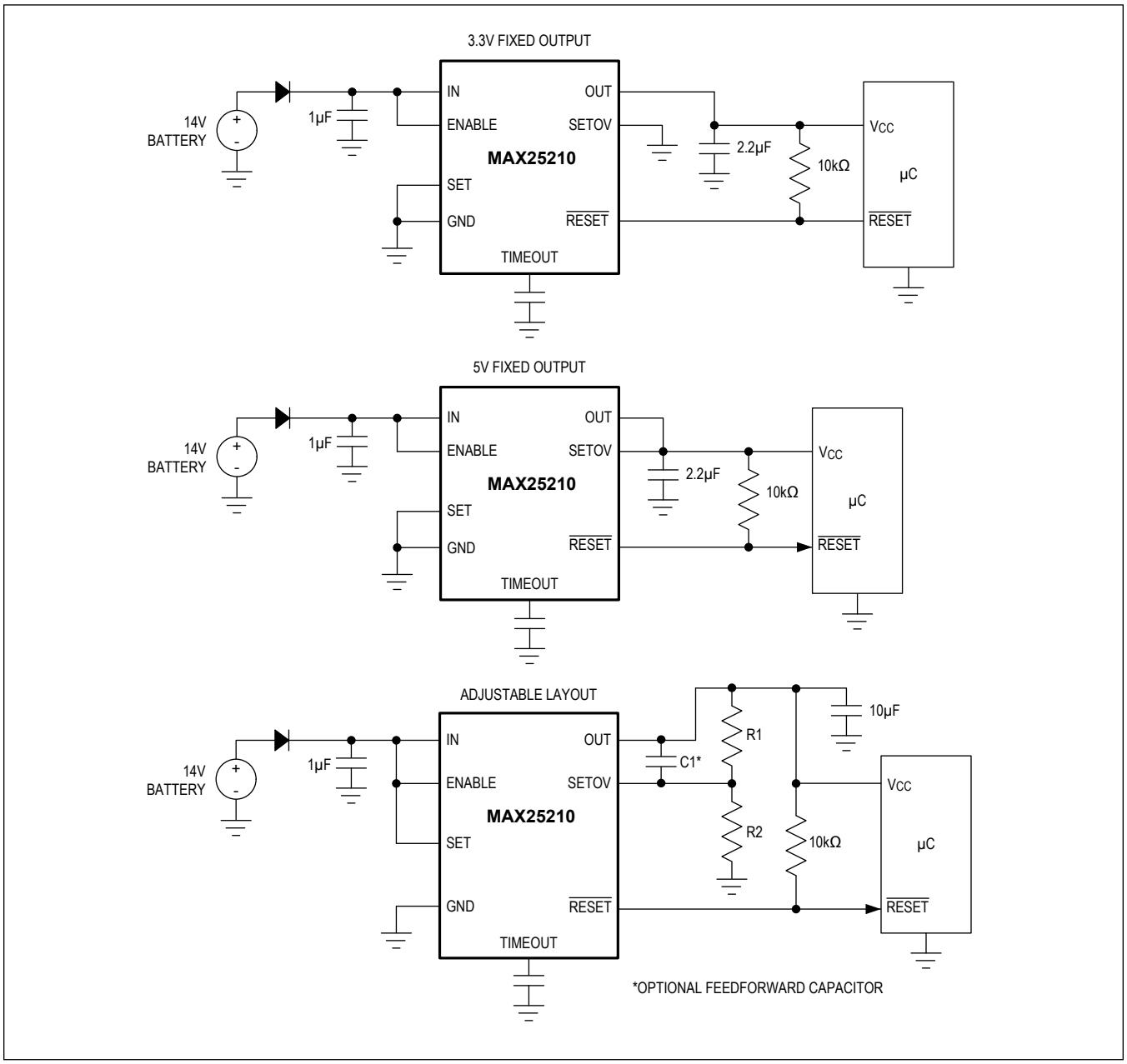

Ordering Information

PART NUMBER	TEMP RANGE (°C)	OUTPUT CURRENT (mA)	RESET THRESHOLD (%)	PIN-PACKAGE	TOP MARKING
MAX25210ATAA8/V+	-40 to +125	300	87.5	8 TDFN-EP* (3mm x 3mm)	BST
MAX25210ATAA9/V+	-40 to +125	300	93.5	8 TDFN-EP* (3mm x 3mm)	BSU
MAX25210ATAB8/V+	-40 to +125	200	87.5	8 TDFN-EP* (3mm x 3mm)	BSV
MAX25210ATAB8U/V+	-40 to +125	200	87.5	8 TDFN-EP* (3mm x 3mm)	BTC
MAX25210ATAB9/V+	-40 to +125	200	93.5	8 TDFN-EP* (3mm x 3mm)	BSW
MAX25210ASAB8/V+**	-40 to +125	200	87.5	8 SO-EP* (5mm x 4mm)	0AAB8/V
MAX25210ASAB9/V+**	-40 to +125	200	93.5	8 SO-EP* (5mm x 4mm)	0AAB9/V
MAX25210ATAC8/V+**	-40 to +125	100	87.5	8 TDFN-EP* (3mm x 3mm)	BSX
MAX25210ATAC9/V+**	-40 to +125	100	93.5	8 TDFN-EP* (3mm x 3mm)	BSY
MAX25210ASAC8/V+**	-40 to +125	100	87.5	8 SO-EP* (5mm x 4mm)	0AAC8/V
MAX25210ASAC9/V+**	-40 to +125	100	93.5	8 SO-EP* (5mm x 4mm)	0AAC9/V
MAX25210ATAD8/V+	-40 to +125	50	87.5	8 TDFN-EP* (3mm x 3mm)	BSZ
MAX25210ATAD9/V+**	-40 to +125	50	93.5	8 TDFN-EP* (3mm x 3mm)	BTA
MAX25210ASAD8/V+**	-40 to +125	50	87.5	8 SO-EP* (5mm x 4mm)	0AAD8/V
MAX25210ASAD9/V+**	-40 to +125	50	93.5	8 SO-EP* (5mm x 4mm)	0AAD9/V

+ Denotes a lead(Pb)-free/RoHS-compliant package.

T Denotes tape-and-reel.

**EP = Exposed pad.*

***Future product—contact factory for availability.*

Revision History

REVISION NUMBER	REVISION DATE	DESCRIPTION	PAGES CHANGED
0	5/20	Initial release	—
1	5/20	Add future-product notation to *Ordering Information*	16
2	8/20	Updated *Electrical Characteristics*, *Typical Application Circuits*, and *Ordering Information*	5, 15, 16
3	2/21	Updated the Top Marking in *Ordering Information*	16, 17
4	10/21	Updated *Electrical Characteristics* and *Ordering Information*	3, 15

ANALOG DEVICES
www.analog.com

Information furnished by Analog Devices is believed to be accurate and reliable. However, no responsibility is assumed by Analog Devices for its use, nor for any infringements of patents or other rights of third parties that may result from its use. Specifications subject to change without notice. No license is granted by implication or otherwise under any patent or patent rights of Analog Devices. Trademarks andregistered trademarks are the property of their respective owners.