MAX31855

Cold-Junction Compensated Thermocouple-to-Digital Converter

General Description

The MAX31855 performs cold-junction compensation and digitizes the signal from a K-, J-, N-, T-, S-, R-, or E-type thermocouple. The data is output in a signed 14-bit, SPI-compatible, read-only format. This converter resolves temperatures to 0.25°C, allows readings as high as +1800°C and as low as -270°C, and exhibits thermocouple accuracy of ±2°C for temperatures ranging from -200°C to +700°C for K-type thermocouples. For full range accuracies and other thermocouple types, see the *Thermal Characteristics* specifications.

Applications

- Industrial
- Appliances
- HVAC

Benefits and Features

- Integration Reduces Design Time and Lowers System Cost
  - 14-Bit, 0.25°C Resolution Converter
  - Integrated Cold-Junction Compensation
  - Versions Available for Most Common Thermocouple Types: K-, J-, N-, T-, S-, R-, and E-Type
  - Detects Thermocouple Shorts to GND or V_{CC}
  - Detects Open Thermocouple
- Interfaces to Most Microcontrollers
  - Simple SPI-Compatible Interface (Read-Only)

***Ordering Information* appears at end of data sheet.**

For related parts and recommended products to use with this part, refer to www.maximintegrated.com/MAX31855.related.

Typical Application Circuit

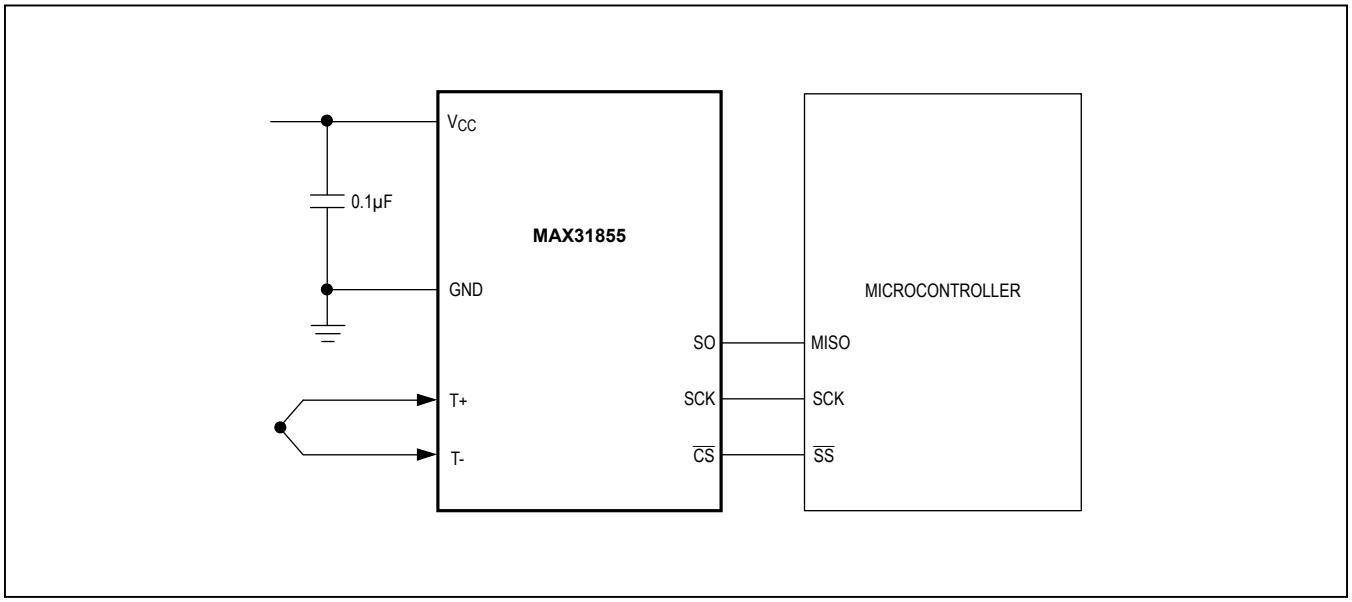

maxim integrated™

Absolute Maximum Ratings

Supply Voltage Range (V_{CC} to GND).....-0.3V to +4.0V
All Other Pins..... -0.3V to (V_{CC} + 0.3V)
Continuous Power Dissipation (T_A = +70°C)
SO (derate 5.9mW/°C above +70°C).....470.6mW
ESD Protection (All Pins, Human Body Model).....±2kV

Operating Temperature Range..... -40°C to +125°C
Junction Temperature.....+150°C
Storage Temperature Range ..... -65°C to +150°C
Lead Temperature (soldering, 10s).....+300°C
Soldering Temperature (reflow) .....+260°C

Stresses beyond those listed under "Absolute Maximum Ratings" may cause permanent damage to the device. These are stress ratings only, and functional operation of the device at these or any other conditions beyond those indicated in the operational sections of the specifications is not implied. Exposure to absolute maximum rating conditions for extended periods may affect device reliability.

Package Thermal Characteristics (Note 1)

SO
Junction-to-Ambient Thermal Resistance (θ_{JA}) .....170°C/W
Junction-to-Case Thermal Resistance (θ_{JC}).....40°C/W

Note 1: Package thermal resistances were obtained using the method described in JEDEC specification JESD51-7, using a four-layer board. For detailed information on package thermal considerations, refer to **www.maximintegrated.com/thermal-tutorial**.

Recommended Operating Conditions

(T_A = -40°C to +125°C, unless otherwise noted.)

PARAMETER	SYMBOL	CONDITIONS	MIN	TYP	MAX	UNITS
Power-Supply Voltage	V_{CC}	(Note 2)	3.0	3.3	3.6	V
Input Logic 0	V_{IL}		-0.3		+0.8	V
Input Logic 1	V_{IH}		2.1		V_{CC} + 0.3	V

DC Electrical Characteristics

(3.0V ≤ V_{CC} P 3.6V, T_A = -40°C to +125°C, unless otherwise noted.)

PARAMETER	SYMBOL	CONDITIONS	MIN	TYP	MAX	UNITS
Power-Supply Current	I_{CC}			900	1500	µA
Thermocouple Input Bias Current		T_A = -40°C to +125°C, 100mV across the thermocouple inputs	-100		+100	nA
Power-Supply Rejection				-0.3		°C/V
Power-On Reset Voltage Threshold	V_{POR}	(Note 3)		2	2.5	V
Power-On Reset Voltage Hysteresis				0.2		V
Output High Voltage	V_{OH}	I_{OUT} = -1.6mA	V_{CC} - 0.4			V
Output Low Voltage	V_{OL}	I_{OUT} = 1.6mA			0.4	V

Thermal Characteristics

(3.0V ≤ V_{CC} P 3.6V, T_A = -40°C to +125°C, unless otherwise noted.) (Note 4)

PARAMETER	SYMBOL	CONDITIONS	MIN	TYP	MAX	UNITS
MAX31855K Thermocouple Temperature Gain and Offset Error (41.276µV/°C nominal sensitivity) (Note 4)		$T_{THERMOCOUPLE}$ = -200°C to +700°C, T_A = -20°C to +85°C (Note 3)	-2		+2	°C
		$T_{THERMOCOUPLE}$ = +700°C to +1350°C, T_A = -20°C to +85°C (Note 3)	-4		+4	
		$T_{THERMOCOUPLE}$ = -270°C to +1372°C, T_A = -40°C to +125°C (Note 3)	-6		+6	
MAX31855J Thermocouple Temperature Gain and Offset Error (57.953µV/°C nominal sensitivity) (Note 4)		$T_{THERMOCOUPLE}$ = -210°C to +750°C, T_A = -20°C to +85°C (Note 3)	-2		+2	°C
		$T_{THERMOCOUPLE}$ = -210°C to +1200°C, T_A = -40°C to +125°C (Note 3)	-4		+4	
MAX31855N Thermocouple Temperature Gain and Offset Error (36.256µV/°C nominal sensitivity) (Note 4)		$T_{THERMOCOUPLE}$ = -200°C to +700°C, T_A = -20°C to +85°C (Note 3)	-2		+2	°C
		$T_{THERMOCOUPLE}$ = +700°C to +1300°C, T_A = -20°C to +85°C (Note 3)	-4		+4	
		$T_{THERMOCOUPLE}$ = -270°C to +1300°C, T_A = -40°C to +125°C (Note 3)	-6		+6	
MAX31855T Thermocouple Temperature Gain and Offset Error (52.18µV/°C nominal sensitivity) (Note 4)		$T_{THERMOCOUPLE}$ = -270°C to +400°C, T_A = -20°C to +85°C (Note 3)	-2		+2	°C
		$T_{THERMOCOUPLE}$ = -270°C to +400°C, T_A = -40°C to +125°C (Note 3)	-4		+4	
MAX31855E Thermocouple Temperature Gain and Offset Error (76.373µV/°C nominal sensitivity) (Note 4)		$T_{THERMOCOUPLE}$ = -200°C to +700°C, T_A = -20°C to +85°C (Note 3)	-2		+2	°C
		$T_{THERMOCOUPLE}$ = +700°C to +1000°C, T_A = -20°C to +85°C (Note 3)	-3		+3	
		$T_{THERMOCOUPLE}$ = -270°C to +1000°C, T_A = -40°C to +125°C (Note 3)	-5		+5	
MAX31855R Thermocouple Temperature Gain and Offset Error (10.506µV/°C nominal sensitivity) (Note 4)		$T_{THERMOCOUPLE}$ = -50°C to +700°C, T_A = -20°C to +85°C (Note 3)	-2		+2	°C
		$T_{THERMOCOUPLE}$ = +700°C to +1768°C, T_A = -20°C to +85°C (Note 3)	-4		+4	
		$T_{THERMOCOUPLE}$ = -50°C to +1768°C, T_A = -40°C to +125°C (Note 3)	-6		+6	
MAX31855S Thermocouple Temperature Gain and Offset Error (9.587µV/°C nominal sensitivity) (Note 4)		$T_{THERMOCOUPLE}$ = -50°C to +700°C, T_A = -20°C to +85°C (Note 3)	-2		+2	°C
		$T_{THERMOCOUPLE}$ = +700°C to +1768°C, T_A = -20°C to +85°C (Note 3)	-4		+4	
		$T_{THERMOCOUPLE}$ = -50°C to +1768°C, T_A = -40°C to +125°C (Note 3)	-6		+6	

Thermal Characteristics (continued)

(3.0V ≤ V_{CC} P 3.6V, T_A = -40°C to +125°C, unless otherwise noted.) (Note 4)

PARAMETER	SYMBOL	CONDITIONS	MIN	TYP	MAX	UNITS
Thermocouple Temperature Data Resolution				0.25		°C
Internal Cold-Junction Temperature Error		T_A = -20°C to +85°C (Note 3)	-2		+2	°C
		T_A = -40°C to +125°C (Note 3)	-3		+3	
Cold-Junction Temperature Data Resolution		T_A = -40°C to +125°C		0.0625		°C
Temperature Conversion Time (Thermocouple, Cold Junction, Fault Detection)	t_{CONV}	(Note 5)		70	100	ms
Thermocouple Conversion Power-Up Time	t_{CONV_PU}	(Note 6)	200			ms

Serial-Interface Timing Characteristics

(See Figure 1 and Figure 2.)

PARAMETER	SYMBOL	CONDITIONS	MIN	TYP	MAX	UNITS
Input Leakage Current	I_{LEAK}	(Note 7)	-1		+1	µA
Input Capacitance	C_{IN}			8		pF
Serial-Clock Frequency	f_{SCL}				5	MHz
SCK Pulse-High Width	t_{CH}		100			ns
SCK Pulse-Low Width	t_{CL}		100			ns
SCK Rise and Fall Time					200	ns
$\overline{CS}$ Fall to SCK Rise	t_{CSS}		100			ns
SCK to $\overline{CS}$ Hold			100			ns
$\overline{CS}$ Fall to Output Enable	t_{DV}				100	ns
$\overline{CS}$ Rise to Output Disable	t_{TR}				40	ns
SCK Fall to Output Data Valid	t_{DO}				40	ns
$\overline{CS}$ Inactive Time		(Note 3)	200			ns

Note 2: All voltages are referenced to GND. Currents entering the IC are specified positive, and currents exiting the IC are negative.
Note 3: Guaranteed by design; not production tested.
Note 4: Not including cold-junction temperature error or thermocouple nonlinearity.
Note 5: Specification is 100% tested at T_A = +25°C. Specification limits over temperature (T_A = T_{MIN} to T_{MAX}) are guaranteed by design and characterization; not production tested.
Note 6: Because the thermocouple temperature conversions begin at V_{POR}, depending on V_{CC} slew rates, the first thermocouple temperature conversion may not produce an accurate result. Therefore, the t_{CONV_PU} specification is required after V_{CC} is greater than V_{CCMIN} to guarantee a valid thermocouple temperature conversion result.
Note 7: For all pins except T+ and T- (see the Thermocouple Input Bias Current parameter in the *DC Electrical Characteristics* table).

Serial-Interface Diagrams

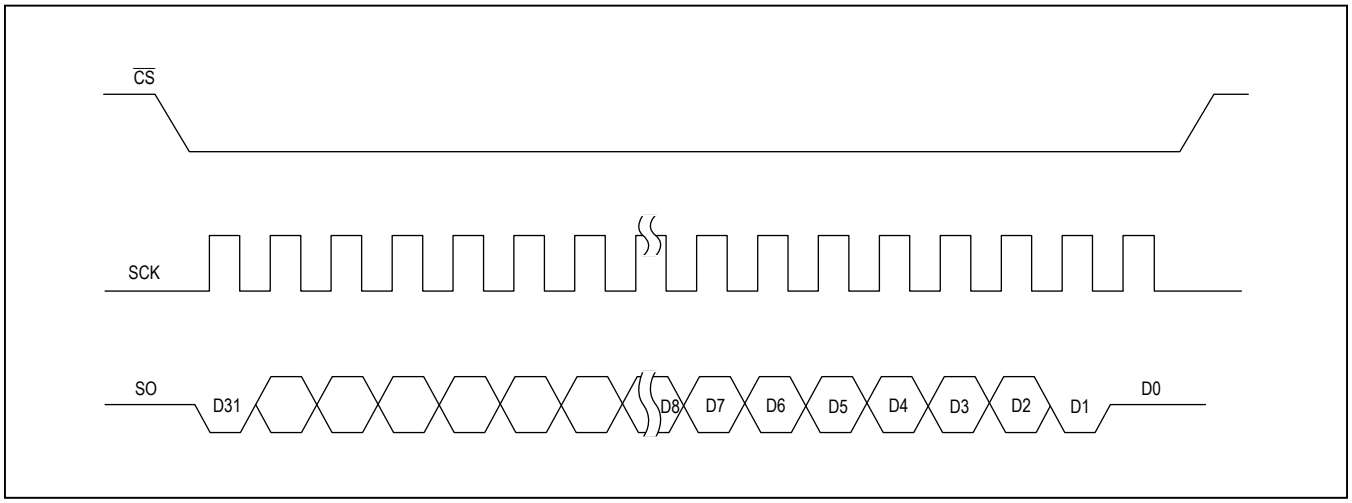

Figure 1. Serial-Interface Protocol

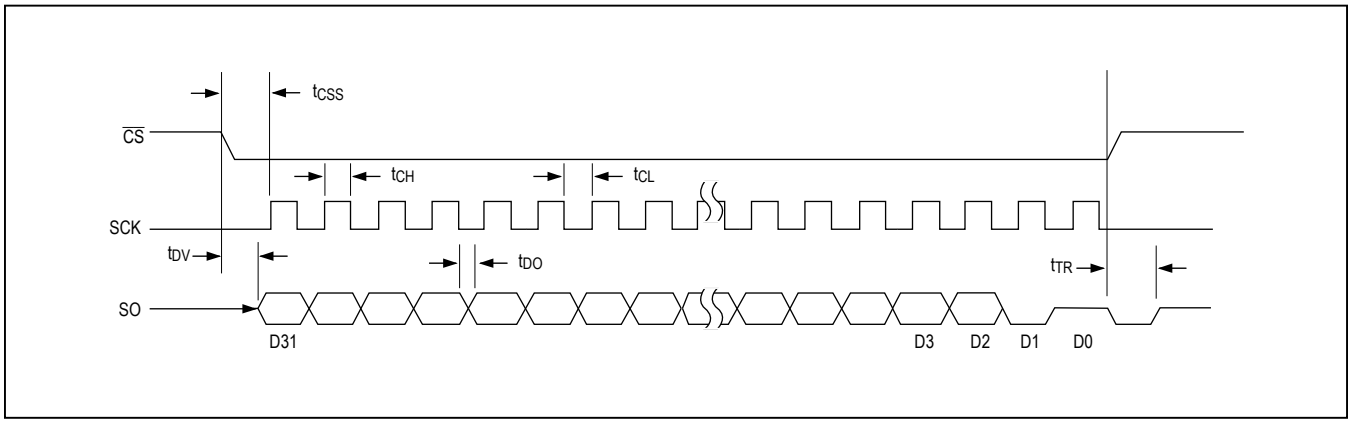

Figure 2. Serial-Interface Timing

Typical Operating Characteristics

(V_{CC} = +3.3V, T_A = +25°C, unless otherwise noted.)

SUPPLY CURRENT vs. TEMPERATURE

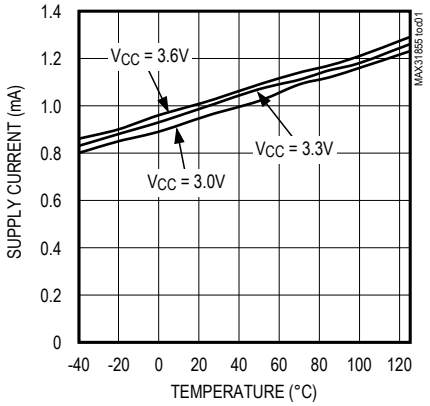

INTERNAL TEMPERATURE SENSOR ACCURACY

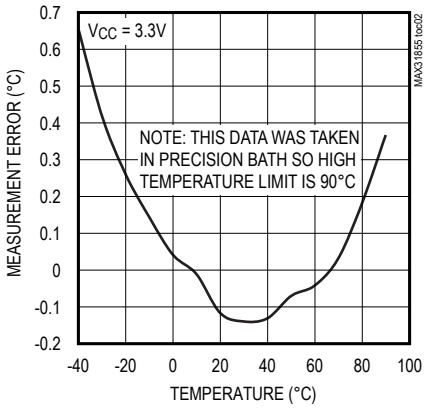

ADC ACCURACY vs. ADC INPUT VOLTAGE ACROSS TEMPERATURE

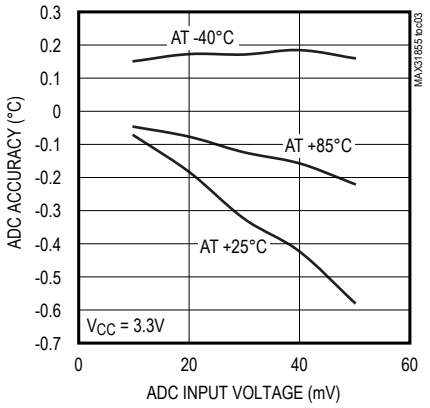

ADC ACCURACY vs. ADC INPUT VOLTAGE ACROSS V_{CC}

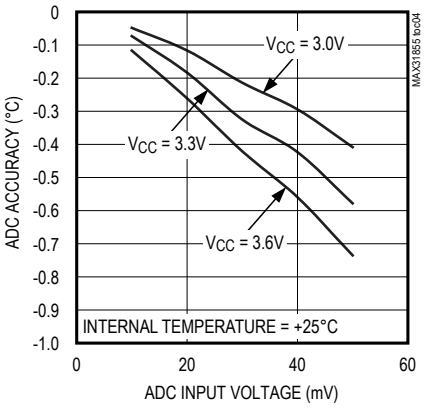

Pin Configuration

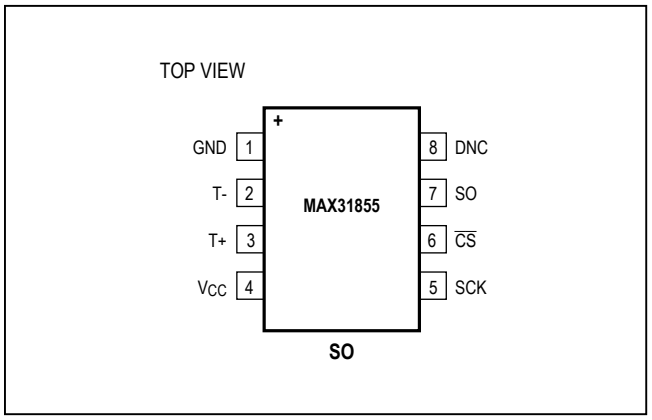

Pin Description

PIN	NAME	FUNCTION
1	GND	Ground
2	T-	Thermocouple Input. See Table 1. Do not connect to GND.
3	T+	Thermocouple Input. See Table 1.
4	V_{CC}	Power-Supply Voltage
5	SCK	Serial-Clock Input
6	$\overline{CS}$	Active-Low Chip Select. Set $\overline{CS}$ low to enable the serial interface.
7	SO	Serial-Data Output
8	DNC	Do Not Connect

Block Diagram

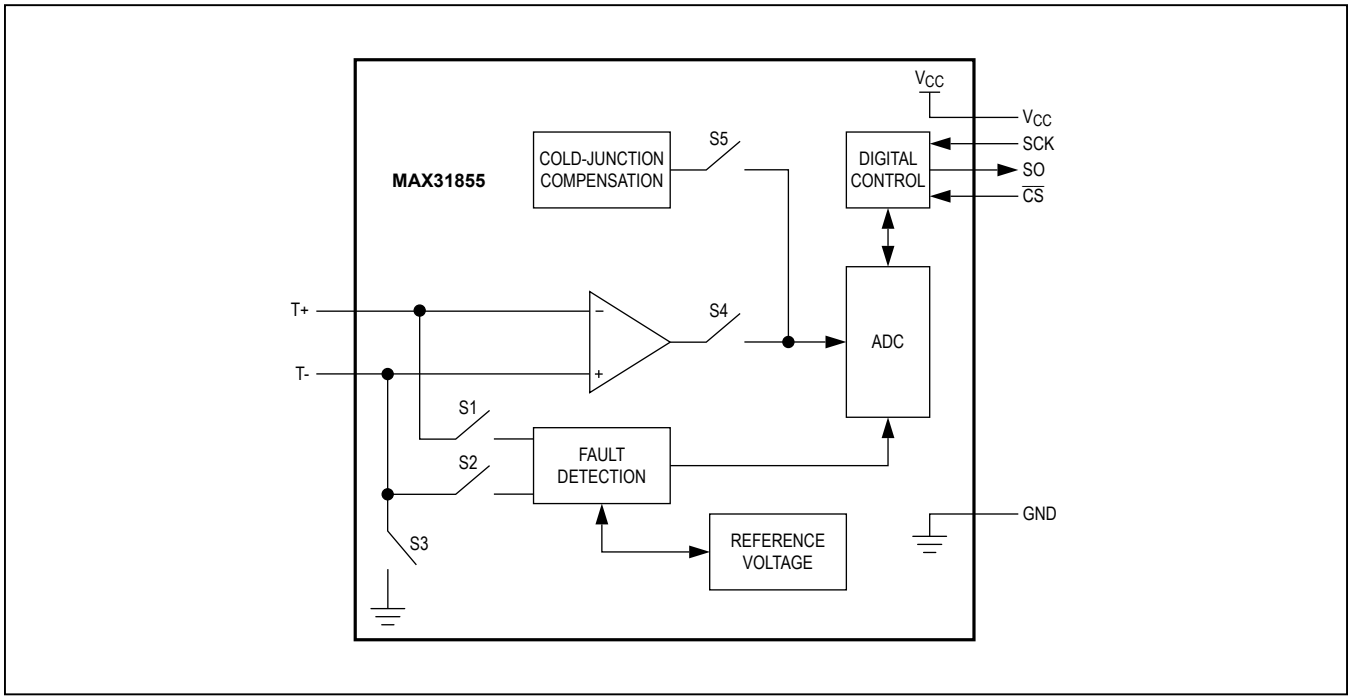

Detailed Description

The MAX31855 is a sophisticated thermocouple-to-digital converter with a built-in 14-bit analog-to-digital converter (ADC). The device also contains cold-junction compensation sensing and correction, a digital controller, an SPI-compatible interface, and associated control logic. The device is designed to work in conjunction with an external microcontroller (µC) in thermostatic, process-control, or monitoring applications. The device is available in several versions, each optimized and trimmed for a specific thermocouple type (K, J, N, T, S, R, or E.). The thermocouple type is indicated in the suffix of the part number (e.g., MAX31855K). See the *Ordering Information* table for all options.

Temperature Conversion

The device includes signal-conditioning hardware to convert the thermocouple's signal into a voltage compatible with the input channels of the ADC. The T+ and T- inputs connect to internal circuitry that reduces the introduction of noise errors from the thermocouple wires.

Before converting the thermoelectric voltages into equivalent temperature values, it is necessary to compensate for the difference between the thermocouple coldjunction side (device ambient temperature) and a 0°C virtual reference. For a K-type thermocouple, the voltage changes by about 41µV/°C, which approximates the thermocouple characteristic with the following linear equation:

$$V_{OUT} = (41.276\mu V/°C) \times (T_R - T_{AMB})$$

where V_{OUT} is the thermocouple output voltage (µV), T_R is the temperature of the remote thermocouple junction (°C), and T_{AMB} is the temperature of the device (°C).

Other thermocouple types use a similar straight-line approximation but with different gain terms. Note that the MAX31855 assumes a linear relationship between temperature and voltage. Because all thermocouples exhibit some level of nonlinearity, apply appropriate correction to the device's output data.

Cold-Junction Compensation

The function of the thermocouple is to sense a difference in temperature between two ends of the thermocouple wires. The thermocouple's "hot" junction can be read across the operating temperature range (Table 1). The reference junction, or "cold" end (which should be at the

Table 1. Thermocouple Wire Connections and Nominal Sensitivities

TYPE	T- WIRE	T+ WIRE	TEMP RANGE (°C)	SENSITIVITY (µV/°C)	COLD-JUNCTION SENSITIVITY (µV/°C) (0°C TO +70°C)
K	Alumel	Chromel	-270 to +1372	41.276 (0°C to +1000°C)	40.73
J	Constantan	Iron	-210 to +1200	57.953 (0°C to +750°C)	52.136
N	Nisil	Nicrosil	-270 to + 1300	36.256 (0°C to +1000°C)	27.171
S	Platinum	Platinum/Rhodium	-50 to +1768	9.587 (0°C to +1000°C)	6.181
T	Constantan	Copper	-270 to +400	52.18 (0°C to +400°C)	41.56
E	Constantan	Chromel	-270 to +1000	76.373 (0°C to +1000°C)	44.123
R	Platinum	Platinum/Rhodium	-50 to +1768	10.506 (0°C to +1000°C)	6.158

same temperature as the board on which the device is mounted) can range from -55°C to +125°C. While the temperature at the cold end fluctuates, the device continues to accurately sense the temperature difference at the opposite end.

The device senses and corrects for the changes in the reference junction temperature with cold-junction compensation. It does this by first measuring its internal die temperature, which should be held at the same temperature as the reference junction. It then measures the voltage from the thermocouple's output at the reference junction and converts this to the noncompensated thermocouple temperature value. This value is then added to the device's die temperature to calculate the thermocouple's "hot junction" temperature. Note that the "hot junction" temperature can be lower than the cold junction (or reference junction) temperature.

Optimal performance from the device is achieved when the thermocouple cold junction and the device are at the same temperature. Avoid placing heat-generating devices or components near the MAX31855 because this could produce cold-junction-related errors.

Conversion Functions

During the conversion time, t_{CONV}, three functions are performed: the temperature conversion of the internal cold-junction temperature, the temperature conversion of the external thermocouple, and the detection of thermocouple faults.

When executing the temperature conversion for the internal cold-junction compensation circuit, the connection to signal from the external thermocouple is opened (switch S4) and the connection to the cold-junction compensation circuit is closed (switch S5). The internal T- reference to ground is still maintained (switch S3 is closed) and the connections to the fault-detection circuit are open (switches S1 and S2).

When executing the temperature conversion of the external thermocouple, the connections to the internal fault-detection circuit are opened (switches S1 and S2 in the *Block Diagram*) and the switch connecting the cold-junction compensation circuit is opened (switch S5). The internal ground reference connection (switch S3) and the connection to the ADC (switch S4) are closed. This allows the ADC to process the voltage detected across the T+ and T- terminals.

During fault detection, the connections from the external thermocouple and cold-junction compensation circuit to the ADC are opened (switches S4 and S5). The internal ground reference on T- is also opened (switch S3). The connections to the internal fault-detection circuit are closed (switch S1 and S2). The fault-detection circuit tests for shorted connections to V_{CC} or GND on the T+ and T- inputs, as well as looking for an open thermocouple condition. Bits D0, D1, and D2 of the output data are normally low. Bit D2 goes high to indicate a thermocouple short to V_{CC}, bit D1 goes high to indicate a thermocouple short to GND, and bit D0 goes high to indicate a thermocouple open circuit. If any of these conditions exists, bit D16 of the SO output data, which is normally low, also goes high to indicate that a fault has occurred.

Serial Interface

The *Typical Application Circuit* shows the device interfaced with a microcontroller. In this example, the device processes the reading from the thermocouple and transmits the data through a serial interface. Drive $\overline{CS}$ low and apply a clock signal at SCK to read the results at SO. Conversions are always being performed in the background. The fault and temperature data are only be updated when $\overline{CS}$ is high.

Drive $\overline{CS}$ low to output the first bit on the SO pin. A complete serial-interface read of the cold-junction compensated thermocouple temperature requires 14 clock cycles. Thirty-two clock cycles are required to read both the thermocouple and reference junction temperatures (Table 2 and Table 3.) The first bit, D31, is the thermocouple temperature sign bit, and is presented to the SO pin within t_{DV} of the falling edge of $\overline{CS}$. Bits D[30:18] contain the converted temperature in the order of MSB to LSB, and are presented to the SO pin within t_{D0} of the falling edge of SCK. Bit D16 is normally low and goes high when the thermocouple input is open or shorted to GND or V_{CC}. The reference junction temperature data begins with D15. $\overline{CS}$ can be taken high at any point while clocking out conversion data. If T+ and T- are unconnected, the thermocouple temperature sign bit (D31) is 0, and the remainder of the thermocouple temperature value (D[30:18]) is 1.

Figure 1 and Figure 2 show the serial-interface timing and order. Table 2 and Table 3 show the SO output bit weights and functions.

Table 2. Memory Map—Bit Weights and Functions

	14-BIT THERMOCOUPLE TEMPERATURE DATA				RES	FAULT BIT	12-BIT INTERNAL TEMPERATURE DATA				RES	SCV BIT	SCG BIT	OC BIT
BIT	D31	D30	…	D18	D17	D16	D15	D14	…	D4	D3	D2	D1	D0
VALUE	Sign	MSB 2^{10} (1024°C)	…	LSB 2^{-2} (0.25°C)	Reserved	1 = Fault	Sign	MSB 2^{6} (64°C)	…	LSB 2^{-4} (0.0625°C)	Reserved	1 = Short to V_{CC}	1 = Short to GND	1 = Open Circuit

Table 3. Memory Map—Descriptions

BIT	NAME	DESCRIPTION
D[31:18]	14-Bit Thermocouple Temperature Data	These bits contain the signed 14-bit thermocouple temperature value. See Table 4.
D17	Reserved	This bit always reads 0.
D16	Fault	This bit reads at 1 when any of the SCV, SCG, or OC faults are active. Default value is 0.
D[15:4]	12-Bit Internal Temperature Data	These bits contain the signed 12-bit value of the reference junction temperature. See Table 5.
D3	Reserved	This bit always reads 0.
D2	SCV Fault	This bit is a 1 when the thermocouple is short-circuited to V_{CC}. Default value is 0.
D1	SCG Fault	This bit is a 1 when the thermocouple is short-circuited to GND. Default value is 0.
D0	OC Fault	This bit is a 1 when the thermocouple is open (no connections). Default value is 0.

Table 4. Thermocouple Temperature Data Format

TEMPERATURE (°C)	DIGITAL OUTPUT (D[31:18])
+1600.00	0110 0100 0000 00
+1000.00	0011 1110 1000 00
+100.75	0000 0110 0100 11
+25.00	0000 0001 1001 00
0.00	0000 0000 0000 00
-0.25	1111 1111 1111 11
-1.00	1111 1111 1111 00
-250.00	1111 0000 0110 00

Note: *The practical temperature ranges vary with the thermocouple type.*

Table 5. Reference Junction Temperature Data Format

TEMPERATURE (°C)	DIGITAL OUTPUT (D[15:4])
+127.0000	0111 1111 0000
+100.5625	0110 0100 1001
+25.0000	0001 1001 0000
0.0000	0000 0000 0000
-0.0625	1111 1111 1111
-1.0000	1111 1111 0000
-20.0000	1110 1100 0000
-55.0000	1100 1001 0000

Applications Information

Noise Considerations

Because of the small signal levels involved, thermocouple temperature measurement is susceptible to powersupply coupled noise. The effects of power-supply noise can be minimized by placing a 0.1µF ceramic bypass capacitor close to the V_{CC} pin of the device and to GND.

The input amplifier is a low-noise amplifier designed to enable high-precision input sensing. Keep the thermocouple and connecting wires away from electrical noise sources. It is strongly recommended to add a 10nF ceramic surface-mount differential capacitor, placed across the T+ and T- pins, in order to filter noise on the thermocouple lines.

Thermal Considerations

Self-heating degrades the device's temperature measurement accuracy in some applications. The magnitude of the temperature errors depends on the thermal conductivity of the device package, the mounting technique, and the effects of airflow. Use a large ground plane to improve the device's temperature measurement accuracy.

The thermocouple system's accuracy can also be improved by following these precautions:

- Use the largest wire possible that does not shunt heat away from the measurement area.
- If a small wire is required, use it only in the region of the measurement, and use extension wire for the region with no temperature gradient.
- Avoid mechanical stress and vibration, which could strain the wires.
- When using long thermocouple wires, use a twisted pair extension wire.
- Avoid steep temperature gradients.
- Try to use the thermocouple wire well within its temperature rating.
- Use the proper sheathing material in hostile environments to protect the thermocouple wire.
- Use extension wire only at low temperatures and only in regions of small gradients.
- Keep an event log and a continuous record of thermocouple resistance.

Ordering Information

PART	THERMOCOUPLE TYPE	MEASURED TEMP RANGE	PIN-PACKAGE
MAX31855KASA+	K	-200°C to +1350°C	8 SO
MAX31855KASA+T	K	-200°C to +1350°C	8 SO
MAX31855JASA+	J	-40°C to +750°C	8 SO
MAX31855JASA+T	J	-40°C to +750°C	8 SO
MAX31855NASA+	N	-200°C to + 1300°C	8 SO
MAX31855NASA+T	N	-200°C to + 1300°C	8 SO
MAX31855SASA+	S	-50°C to +1600°C	8 SO
MAX31855SASA+T	S	-50°C to +1600°C	8 SO
MAX31855TASA+	T	-250°C to +400°C	8 SO
MAX31855TASA+T	T	-250°C to +400°C	8 SO
MAX31855EASA+	E	-40°C to +900°C	8 SO
MAX31855EASA+T	E	-40°C to +900°C	8 SO
MAX31855RASA+	R	-50°C to +1770°C	8 SO
MAX31855RASA+T	R	-50°C to +1770°C	8 SO

Note: *All devices are specified over the -40°C to +125°C operating temperature range.*

+Denotes a lead(Pb)-free/RoHS-compliant package.

T = Tape and reel.

Package Information

For the latest package outline information and land patterns (footprints), go to **www.maximintegrated.com/packages**. Note that a "+", "#", or "-" in the package code indicates RoHS status only. Package drawings may show a different suffix character, but the drawing pertains to the package regardless of RoHS status.

PACKAGE TYPE	PACKAGE CODE	OUTLINE NO.	LAND PATTERN NO.
8 SO	S8+4	**21-0041**	**90-0096**

Revision History

REVISION NUMBER	REVISION DATE	DESCRIPTION	PAGES CHANGED
0	3/11	Initial release	—
1	11/11	Corrected ESD protection value; added “S” and “R” type specifications	1, 2, 3, 8, 12
2	2/12	Corrected the thermocouple temperature conditions in the *Thermal Characteristics* table and Table 1; added clarification to the *Serial Interface* section to help users better understand how to communicate with the device; added a recommendation to add a 10nF differential capacitor to the T+/T- pins in the *Noise Considerations* section	3, 8, 9, 11
3	7/14	Change “S” type thermocouple minimum temperature in Table 1 and *Ordering Information*	8, 12
4	11/14	Removed automotive reference from data sheet	1
5	1/15	Revised *Benefits and Features* section	1

For pricing, delivery, and ordering information, please contact Maxim Direct at 1-888-629-4642, or visit Maxim Integrated’s website at www.maximintegrated.com.

Maxim Integrated cannot assume responsibility for use of any circuitry other than circuitry entirely embodied in a Maxim Integrated product. No circuit patent licenses are implied. Maxim Integrated reserves the right to change the circuitry and specifications without notice at any time. The parametric values (min and max limits) shown in the Electrical Characteristics table are guaranteed. Other parametric values quoted in this data sheet are provided for guidance.

Maxim Integrated and the Maxim Integrated logo are trademarks of Maxim Integrated Products, Inc. © 2015 Maxim Integrated Products, Inc.