Click here for production status of specific part numbers.

MAX3221/MAX3223/ MAX3243

+3V to +5.5V RS-232 Transceivers with AutoShutdown

General Description

The MAX3221/MAX3223/MAX3243 achieve 1µA supply current with Maxim's revolutionary AutoShutdown™ feature. When the MAX3221/MAX3223/MAX3243 do not sense a valid signal level on their receiver inputs, the on-board power supply and drivers shut down. This occurs if the RS-232 cable is disconnected or if the transmitters of the connected peripheral are turned off. The system turns on again when a valid level is applied to any RS-232 receiver input.

The MAX3221/MAX3223/MAX3243 require only 0.1µF capacitors in 3.3V operation, and can operate from input voltages ranging from +3.0V to +5.5V.

A proprietary, high-efficiency, dual charge-pump power supply and a low-dropout transmitter combine to deliver true RS-232 performance from a single +3.0V to +5.5V supply.

The MAX3221 is a 1-driver/1-receiver 16-pin SSOP version of the 20-pin 2-driver/2-receiver MAX3223.

The MAX3243 is a 3-driver/5-receiver with a complementary always-active receiver for external monitoring in a variety of 28 pin packages. See *Order Information* table for package offerings.

Applications

- Battery-Powered Equipment
- Hand-Held Equipment
- Peripherals
- Portable Diagnostics Equipment

Selector Guide

PART	Tx	Rx	V_{CC} RANGE (V)	AutoShutdown
MAX3221	1	1	3.0 to 5.5	Yes
MAX3223	2	2	3.0 to 5.5	Yes
MAX3243	3	5	3.0 to 5.5	Yes

Pin Configurations appear at end of data sheet.

Typical Operating Circuits appear at end of data sheet.

AutoShutdown and UCSP are trademarks of Maxim Integrated Products, Inc.

Benefits and Features

- Integrated Charge Pump Circuitry Simplifies Power Requirements
  - Eliminates the Need for a ±12 Supply
  - Operation From a Single +3.3V or +5V Supply
- 1µA Supply Current in Shutdown Mode Saves Power
  - AutoShutdown Feature is Enabled After No Activity on Receiver Inputs for 30µs
  - Software Control Option for Shutdown

Ordering Information

PART	TEMP RANGE	PIN-PACKAGE
MAX3221CAE	0°C to +70°C	16 SSOP
MAX3221CUE†	0°C to +70°C	16 TSSOP
MAX3221EAE	-40°C to +85°C	16 SSOP
MAX3221EUE†	-40°C to +85°C	16 TSSOP
MAX3223CPP	0°C to +70°C	20 Plastic DIP
MAX3223CAP	0°C to +70°C	20 SSOP
MAX3223CUP	0°C to +70°C	20 TSSOP
MAX3223EPP	-40°C to +85°C	20 Plastic DIP
MAX3223EAP	-40°C to +85°C	20 SSOP
MAX3223EUP	-40°C to +85°C	20 TSSOP
MAX3243CWI	0°C to +70°C	28 Wide SO
MAX3243CAI	0°C to +70°C	28 SSOP
MAX3243CUI	0°C to +70°C	28 TSSOP
MAX3243EWI	-40°C to +85°C	28 Wide SO
MAX3243EAI	-40°C to +85°C	28 SSOP
MAX3243EUI	-40°C to +85°C	28 TSSOP

†*Future product—contact factory for availability.*

maxim integrated™

Absolute Maximum Ratings

V_{CC}.....-0.3V to +6V
V+ (Note 1).....-0.3V to +7V
V- (Note 1).....+0.3V to -7V
V+ + |V-| (Note 1).....+13V
Input Voltages
T_IN, $\overline{FORCEOFF}$, FORCEON, $\overline{EN}$ (MAX3223).. -0.3V to +6V
R_IN.....±25V
Output Voltages
T_OUT.....±13.2V
R_OUT, $\overline{INVALID}$ ..... -0.3V to (V_{CC} + 0.3V)
Short-Circuit Duration
T_OUT.....Continuous
Continuous Power Dissipation (T_A = +70°C)
16-Pin SSOP (derate 7.14mW/°C above +70°C).....571mW
16-Pin TSSOP (derate 6.70mW/°C above +70°C).....533mW
20-Pin Plastic DIP
(derate 11.11mW/°C above +70°C).....889mW
20-Pin SSOP (derate 8.00mW/°C above +70°C).....640mW
20-Pin TSSOP DIP
(derate 7.00mW/°C above +70°C) 559mW
28-Pin Wide SO (derate 12.50mW/°C above +70°C) 1W
28-Pin SSOP (derate 9.52mW/°C above +70°C).....762mW
28-Pin TSSOP (derate 8.70mW/°C above +70°C).....696mW
Operating Temperature Ranges
MAX32_ _C_ _.....0°C to +70°C
MAX32_ _E_ _ ..... -40°C to +85°C
Storage Temperature Range ..... -65°C to +150°C
Lead Temperature (soldering, 10s) .....+300°C

Note 1: V+ and V- can have maximum magnitudes of 7V, but their absolute difference cannot exceed 13V.

Stresses beyond those listed under "Absolute Maximum Ratings" may cause permanent damage to the device. These are stress ratings only, and functional operation of the device at these or any other conditions beyond those indicated in the operational sections of the specifications is not implied. Exposure to absolute maximum rating conditions for extended periods may affect device reliability.

Electrical Characteristics

(V_{CC} = +3.0V to +5.5V, C1–C4 = 0.1µF (Note 2), T_A = T_{MIN} to T_{MAX}, unless otherwise noted. Typical values are at T_A = +25°C.)

PARAMETER	CONDITIONS		MIN	TYP	MAX	UNITS
DC CHARACTERISTICS						
Supply Current, AutoShutdown	V_{CC} = 3.3V or 5.0V, T_A = +25°C	All R_IN open, FORCEON = GND, $\overline{FORCEOFF}$ = V_{CC}		1.0	10	µA
Supply Current, Shutdown		$\overline{FORCEOFF}$ = GND		1.0	10	µA
Supply Current, AutoShutdown Disabled		FORCEON = $\overline{FORCEOFF}$ = V_{CC}, no load		0.3	1.0	mA
LOGIC INPUTS AND RECEIVER OUTPUTS						
Input Logic Threshold Low	T_IN, FORCEON, $\overline{FORCEOFF}$, $\overline{EN}$ (MAX3223)				0.8	V
Input Logic Threshold High	T_IN, EN, FORCEON, $\overline{FORCEOFF}$	V_{CC} = 3.3V	2.0			V
		V_{CC} = 5.0V	2.4			
Input Leakage Current	T_IN, EN, FORCEON, $\overline{FORCEOFF}$			±0.01	±1.0	µA
Output Leakage Current	Receivers disabled			±0.05	±10	µA
Output Voltage Low	I_{OUT} = 1.6mA				0.4	V
Output Voltage High	I_{OUT} = -1.0mA		V_{CC} - 0.6	V_{CC} - 0.1		V
AUTOSHUTDOWN (FORCEON = GND, $\overline{FORCEOFF}$ = V_{CC})						
Receiver Input Thresholds to Transmitters Enabled	Figure 5	Positive threshold			2.7	V
		Negative threshold	-2.7			
Receiver Input Thresholds to Transmitters Disabled	1µA supply current, Figure 5		-0.3		+0.3	V
$\overline{INVALID}$ Output Voltage Low	I_{OUT} = 1.6mA				0.4	V
$\overline{INVALID}$ Output Voltage High	I_{OUT} = 1.0mA		V_{CC} - 0.6			V
Receiver Threshold to Transmitters Enabled (t_{WU})	Figure 5			250		µs

Electrical Characteristics (continued)

(V_{CC} = +3.0V to +5.5V, C1–C4 = 0.1µF (Note 2), T_A = T_{MIN} to T_{MAX}, unless otherwise noted. Typical values are at T_A = +25°C.)

PARAMETER	CONDITIONS		MIN	TYP	MAX	UNITS
Receiver Positive or Negative Threshold to $\overline{INVALID}$ High (t_{INVH})	Figure 5			1		µs
Receiver Positive or Negative Threshold to $\overline{INVALID}$ Low (t_{INVL})	Figure 5			30		µs
RECEIVER INPUTS						
Input Voltage Range			-25		+25	V
Input Threshold Low	T_A = +25°C	V_{CC} = 3.3V	0.6	1.2		V
		V_{CC} = 5.0V	0.8	1.5		
Input Threshold High	T_A = +25°C	V_{CC} = 3.3V		1.5	2.4	V
		V_{CC} = 5.0V		1.8	2.4	
Input Hysteresis				0.3		V
Input Resistance	T_A = +25°C		3	5	7	kΩ
TRANSMITTER OUTPUTS						
Output Voltage Swing	All transmitter outputs loaded with 3kΩ to ground		±5.0	±5.4		V
Output Resistance	V_{CC} = V+ = V- = 0V, transmitter output = ±2V		300	10M		Ω
Output Short-Circuit Current				±35	±60	mA
Output Leakage Current	V_{OUT} = ±12V, V_{CC} = 0V or 3.0V to 5.5V, transmitters disabled				±25	µA
MOUSE DRIVEABILITY (MAX3243)						
Transmitter Output Voltage	T1IN = T2IN = GND, T3IN = V_{CC}, T3OUT loaded with 3kΩ to GND, T1OUT and T2OUT loaded with 2.5mA each		±5			V
TIMING CHARACTERISTICS						
Maximum Data Rate	R_L = 3kΩ, C_L = 1000pF, one transmitter switching		120	235		kbps
Receiver Propagation Delay	Receiver input to receiver output, C_L = 150pF	t_{PHL}		0.3		µs
		t_{PLH}		0.3		
Receiver Output Enable Time	Normal operation			200		ns
Receiver Output Disable Time	Normal operation			200		ns
Transmitter Skew	$\lvert t_{PHL} - t_{PLH} \rvert$	MAX3221/MAX3223		200		ns
		MAX3243		200	1000	
Receiver Skew	$\lvert t_{PHL} - t_{PLH} \rvert$	MAX3221/MAX3223		100		ns
		MAX3243		100	500	
Transition-Region Slew Rate	V_{CC} = 3.3V, R_L = 3kΩ to 7kΩ, T_A = +25°C, measured from +3V to -3V or -3V to +3V	C_L = 200pF to 2500pF	4	8.0	30	V/µs
		C_L = 200pF to 1000pF	6		30	

Note 2: C1–C4 = 0.1µF, tested at 3.3V ±10%. C1 = 0.047µF, C2–C4 = 0.33µF, tested at 5.0V ±10%.

Typical Operating Characteristics

(V_{CC} = +3.3V, 235kbps data rate, 0.1µF capacitors, all transmitters loaded with 3kΩ, T_A = +25°C, unless otherwise noted.)

MAX3221/MAX3223
TRANSMITTER OUTPUT VOLTAGE
vs. LOAD CAPACITANCE

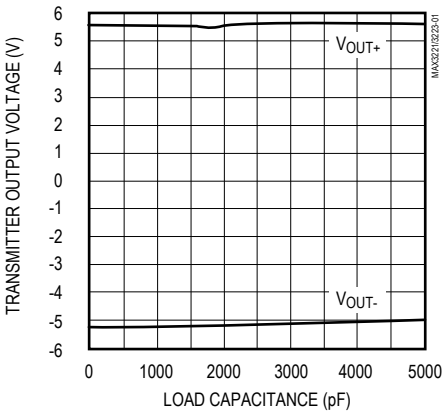

MAX3221/MAX3223
SLEW RATE
vs. LOAD CAPACITANCE

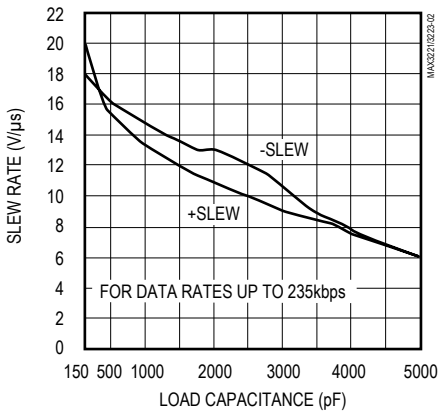

MAX3221/MAX3223
SUPPLY CURRENT vs. LOAD CAPACITANCE
WHEN TRANSMITTING DATA

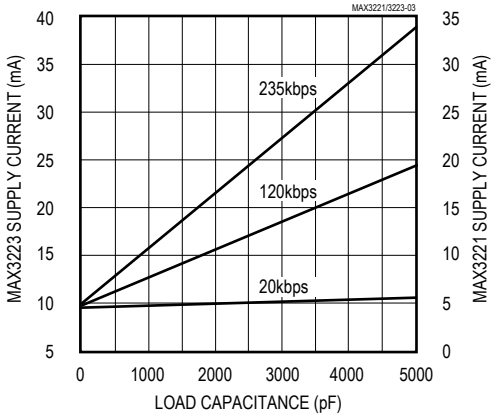

MAX3243
TRANSMITTER OUTPUT VOLTAGE
vs. LOAD CAPACITANCE

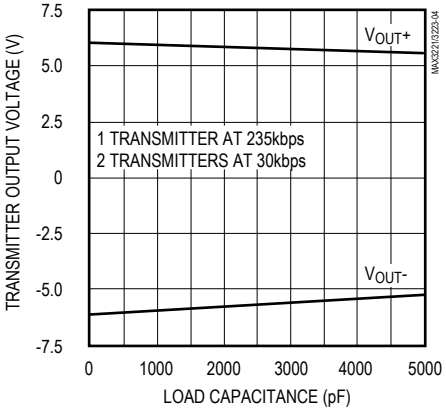

MAX3243
SLEW RATE
vs. LOAD CAPACITANCE

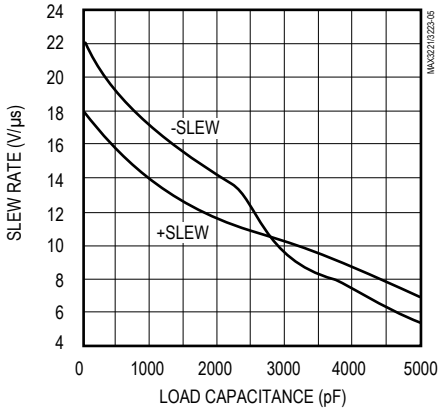

MAX3243
SUPPLY CURRENT vs. LOAD
CAPACITANCE WHEN TRANSMITTING DATA

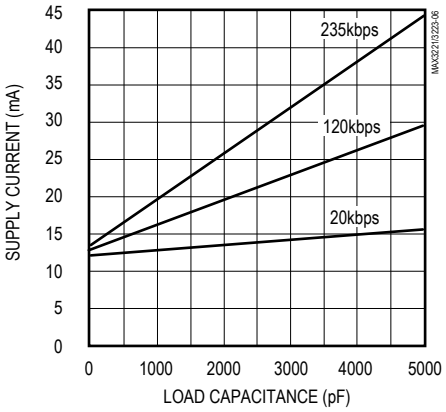

Pin Description

PIN			NAME	FUNCTION
MAX3221	MAX3223	MAX3243		
1	1	—	$\overline{EN}$	Receiver Enable Control. Drive low for normal operation. Drive high to force the receiver outputs into a high-Z state.
5	5	1	C2+	Positive terminal of inverting charge-pump capacitor
6	6	2	C2-	Negative terminal of inverting charge-pump capacitor
7	7	3	V-	-5.5V generated by the charge pump
8	9, 16	4–8	R_IN	RS-232 Receiver Inputs
13	8, 17	9, 10, 11	T_OUT	RS-232 Transmitter Outputs
11	12, 13	12, 13, 14	T_IN	TTL/CMOS Transmitter Inputs
9	10, 15	15–19	R_OUT	TTL/CMOS Receiver Outputs
—	—	20	R2OUTB	Noninverting Receiver Output—active in shutdown
10	11	21	$\overline{INVALID}$	Output of the valid signal detector. Indicates if a valid RS-232 level is present on receiver inputs logic “1”.
16	20	22	$\overline{FORCEOFF}$	Drive low to shut down transmitters and on-board power supply. This overrides all automatic circuitry and FORCEON (Table 1).
12	14	23	FORCEON	Drive high to override automatic circuitry keeping transmitters on ($\overline{FORCEOFF}$ must be high) (Table 1).
4	4	24	C1-	Negative terminal of the voltage doubler charge-pump capacitor
14	18	25	GND	Ground
15	19	26	V_{CC}	+3.0V to +5.5V Supply Voltage
3	3	27	V+	+5.5V generated by the charge pump
2	2	28	C1+	Positive terminal of the voltage doubler charge-pump capacitor

Detailed Description

Dual Charge-Pump Voltage Converter

The MAX3221/MAX3223/MAX3243’s internal power supply consists of a regulated dual charge pump that provides output voltages of +5.5V (doubling charge pump) and -5.5V (inverting charge pump), regardless of the input voltage (V_{CC}) over the +3.0V to +5.5V range. The charge pumps operate in a discontinuous mode: if the output voltages are less than 5.5V, the charge pumps are enabled; if the output voltages exceed 5.5V, the charge pumps are disabled. Each charge pump requires a flying capacitor (C1, C2) and a reservoir capacitor (C3, C4) to generate the V+ and V- supplies.

RS-232 Transmitters

The transmitters are inverting level translators that convert CMOS-logic levels to 5.0V EIA/TIA-232 levels. They guarantee a 120kbps data rate with worst-case loads of 3kΩ in parallel with 1000pF, providing compatibility with PC-to-PC communication software (such as Laplink™). Typically, the MAX3221/MAX3223/MAX3243 can operate at data rates of 235kbps. Transmitters can be paralleled to drive multiple receivers or mice (MAX3243). Figure 1 shows a complete system connection.

When $\overline{FORCEOFF}$ is driven to ground, or the auto-shutdown circuitry senses invalid voltage levels at all receiver inputs, the transmitters are disabled and the outputs are forced into a high-impedance state.

LapLink is a trademark of Traveling Software.

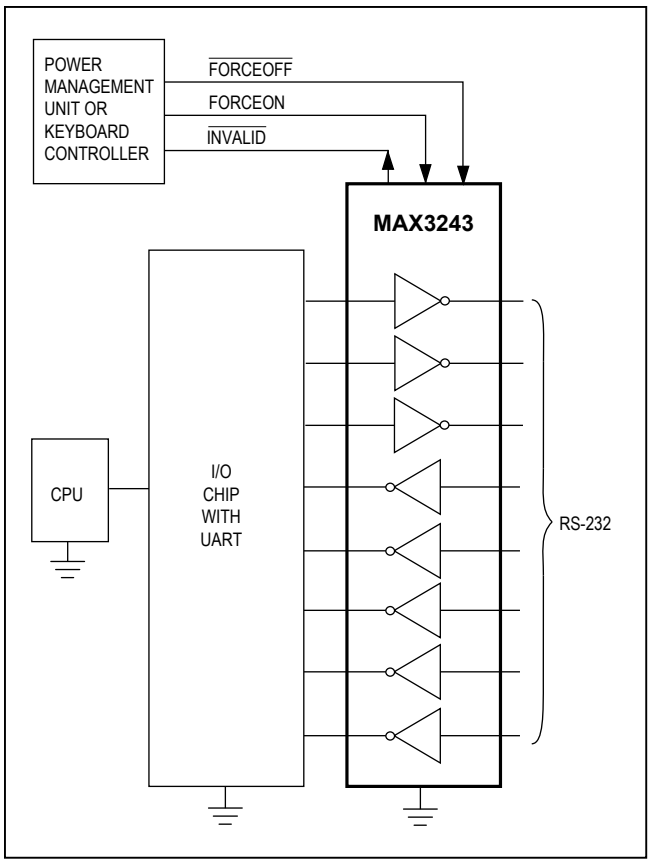

Figure 1. Interface Under Control of PMU

RS-232 Receivers

The MAX3221/MAX3223/MAX3243's receivers convert RS-232 signals to CMOS-logic output levels. All receivers have one inverting three-state output. In shutdown ($\overline{FORCEOFF}$ = low) or in AutoShutdown, the MAX3221/MAX3223's receivers are active (Table 1). Driving $\overline{EN}$ high places the receiver(s) in a high-impedance state. The MAX3243's receivers are high impedance when the part is shut down.

The MAX3243 has an always-active complementary output (R2OUTB). R2OUTB is an extra output that monitors receiver activity while the other receivers are high impedance. This allows Ring Indicator to be monitored without forward biasing other devices connected to the receiver outputs. This is ideal for systems where V_{CC} is set to 0V in shutdown to accommodate peripherals, such as UARTs (Figure 2).

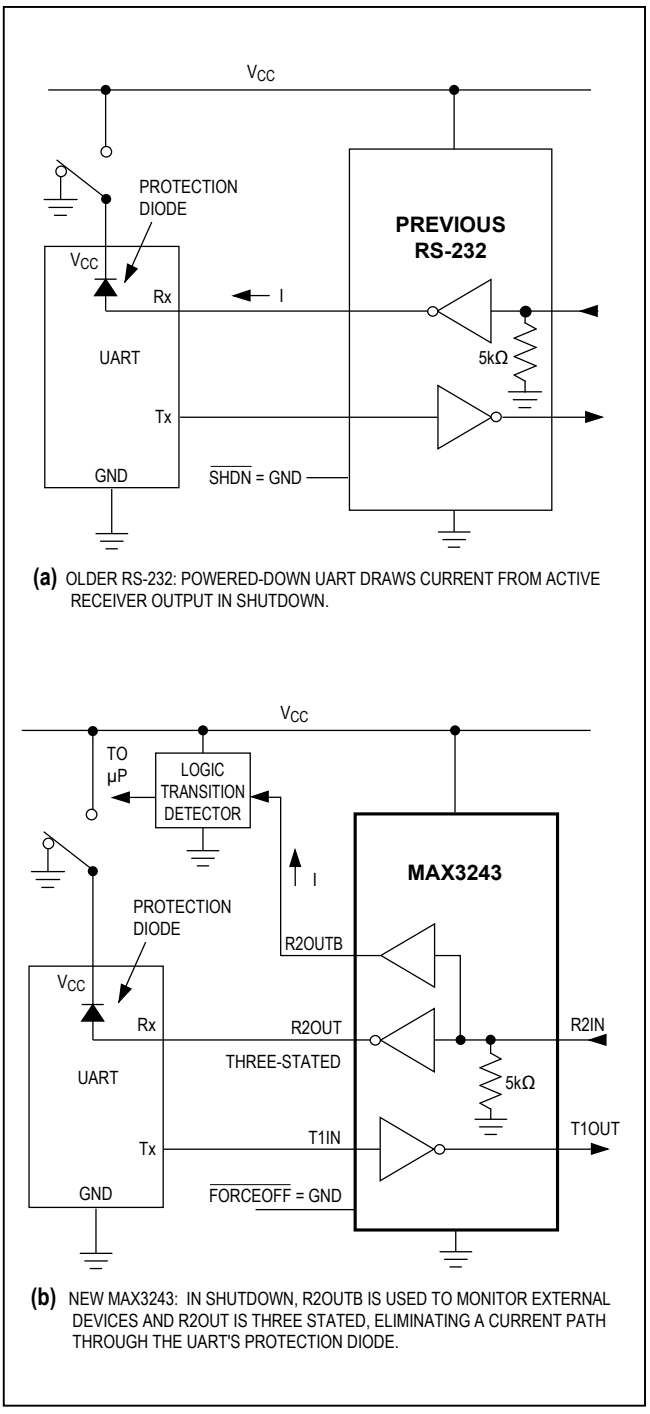

Figure 2. The MAX3243 Detects RS-232 Activity When the UART and Interface Are Shut Down.

Table 1a. MAX3221/MAX3223 $\overline{\text{FORCEOFF}}$ and Enable Control Truth Table

$\overline{\text{FORCEOFF}}$	$\overline{\text{EN}}$	T_OUT	R_OUT
0	0	High-Z	Active
0	1	High-Z	High-Z
1	0	Active*	Active
1	1	Active*	High-Z

Table 1b. MAX3243 $\overline{\text{FORCEOFF}}$ Control Truth Table

$\overline{\text{FORCEOFF}}$	T_OUT	R_OUT	R2OUTB
0	High-Z	High-Z	Active
1	Active*	Active*	Active

***Note:** *If the part is in AutoShutdown mode ($\overline{\text{FORCEOFF}}$ = V_{CC}, FORCEON = GND), it is shut down if no valid RS-232 levels are present on all receiver inputs.*

AutoShutdown

A 1µA supply current is achieved with Maxim's new AutoShutdown feature, which operates when FORCEON is low and $\overline{\text{FORCEOFF}}$ is high. When the MAX3221/MAX3223/MAX3243 sense no valid signal levels on all receiver inputs for 30µs, the on-board power supply and drivers are shut off, reducing supply current to 1µA. This occurs if the RS-232 cable is disconnected or the connected peripheral transmitters are turned off. The system turns on again when a valid level is applied to any RS-232 receiver input. As a result, the system saves power without changes to the existing BIOS or operating system. When using AutoShutdown, the $\overline{\text{INVALID}}$ output is high when the device is on and low when the device is shut down. Because $\overline{\text{INVALID}}$ indicates the receiver inputs' condition, it can be used in any mode (Figure 3).

Table 2 and Figure 3c summarize the MAX3221/MAX3223/MAX3243 operating modes. FORCEON and $\overline{\text{FORCEOFF}}$ override the automatic circuitry and force the transceiver into its normal operating state or into its low-power standby state. When neither control is asserted, the IC selects between these states automatically based on receiver input levels. Figures 3a, 3b, and 5a depict valid and invalid RS-232 receiver levels.

A mouse or other system with AutoShutdown may need time to wake up. Figure 4 shows a circuit that forces the transmitters on for 100ms, allowing enough time for the other system to realize that the MAX3221/MAX3223/

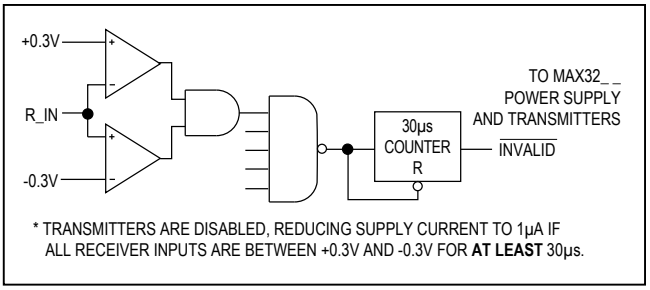

Figure 3a. MAX32_ _ Entering 1µA Supply Mode Through AutoShutdown

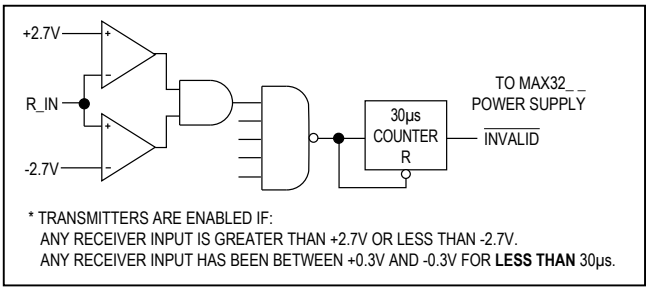

Figure 3b. MAX32_ _ with Transmitters Enabled Using AutoShutdown

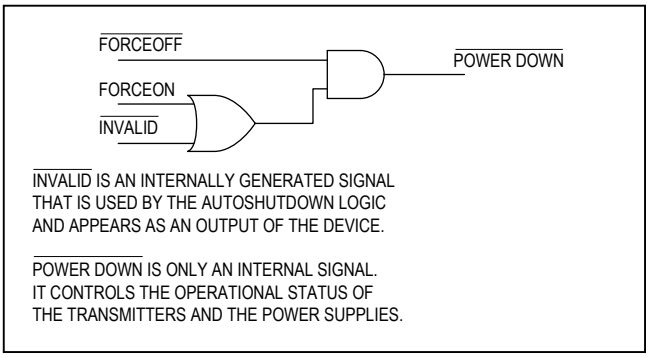

Figure 3c. AutoShutdown Logic

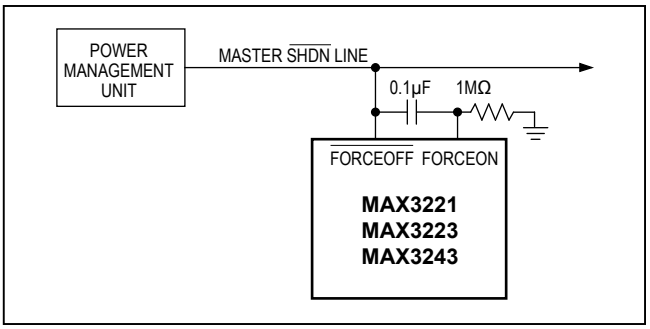

Figure 4. AutoShutdown with Initial Turn-On to Wake Up a Mouse or Another System

Table 2. AutoShutdown Logic

RS-232 SIGNAL PRESENT AT RECEIVER INPUT	$\overline{\text{FORCEOFF}}$ INPUT	FORCEON INPUT	$\overline{\text{INVALID}}$ INPUT	TRANSCEIVER STATUS
Yes	H	X	H	Normal Operation
No	H	H	L	Normal Operation (Forced On)
No	H	L	L	Shutdown (AutoShutdown)
Yes	L	X	H	Shutdown (Forced Off)
No	L	X	L	Shutdown (Forced Off)

MAX3243 is awake. If the other system outputs valid RS-232 signals within that time, the RS-232 ports on both systems remain enabled.

When shut down, the device's charge pumps are turned off, V+ decays to V_{CC}, V- decays to ground, and the transmitter outputs are disabled (high impedance). The time required to exit shutdown is typically 100µs (Figure 5b).

Software-Controlled Shutdown

If direct software control is desired, $\overline{\text{INVALID}}$ can be used to indicate DTR or Ring Indicator signal. Tie FORCEOFF and $\overline{\text{FORCEON}}$ together to bypass AutoShutdown so the line acts like a $\overline{\text{SHDN}}$ input.

Applications Information

Capacitor Selection

The capacitor type used for C1–C4 is not critical for proper operation; either polarized or nonpolarized capacitors may be used. The charge pump requires 0.1µF capacitors for 3.3V operation. For other supply voltages, refer to Table 3 for required capacitor values. Do not use values smaller than those listed in Table 3. Increasing the capacitor values (e.g., by a factor of 2) reduces ripple on the transmitter outputs and slightly reduces power consumption. C2, C3, and C4 can be increased without changing C1's value. **However, do not increase C1 without also increasing the values of C2, C3, and C4 to maintain the proper ratios (C1 to the other capacitors).**

When using the minimum required capacitor values, make sure the capacitor value does not degrade excessively with temperature. If in doubt, use capacitors with a larger nominal value. The capacitor's equivalent series resistance (ESR) usually rises at low temperatures and influences the amount of ripple on V+ and V-.

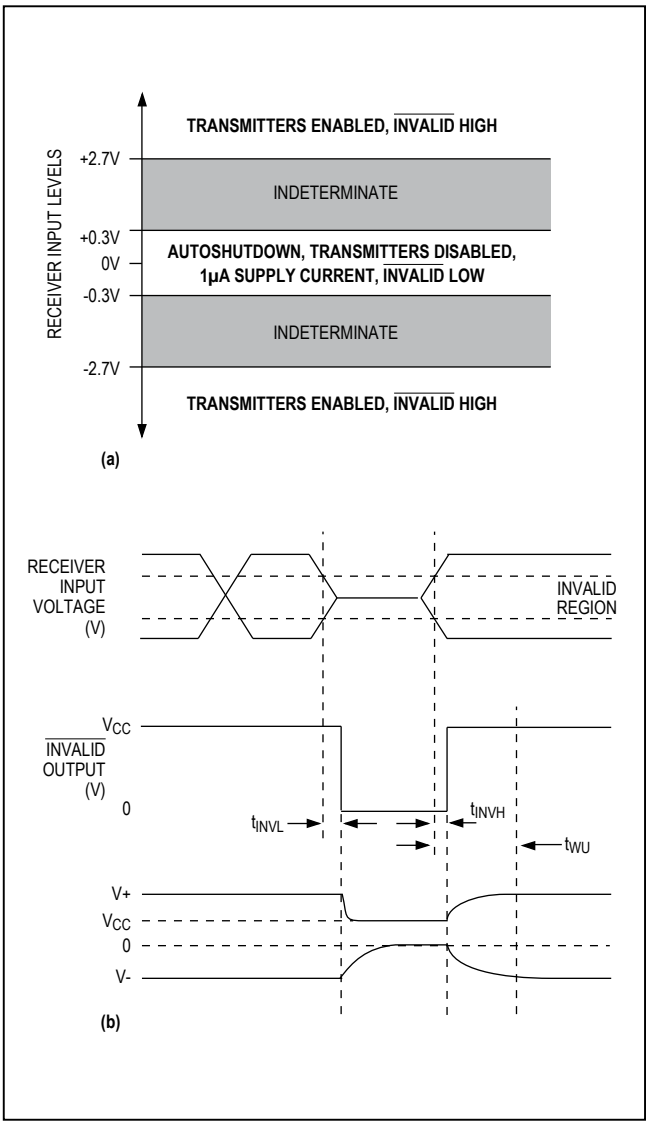

Figure 5. AutoShutdown Trip Levels

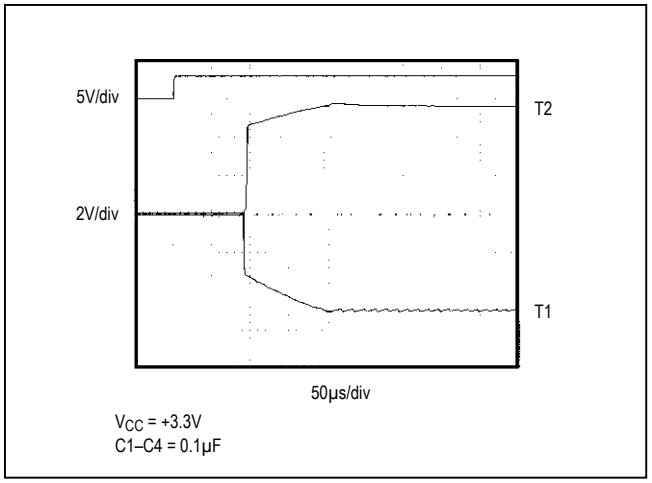

Figure 6. Transmitter Outputs When Exiting Shutdown or Powering Up

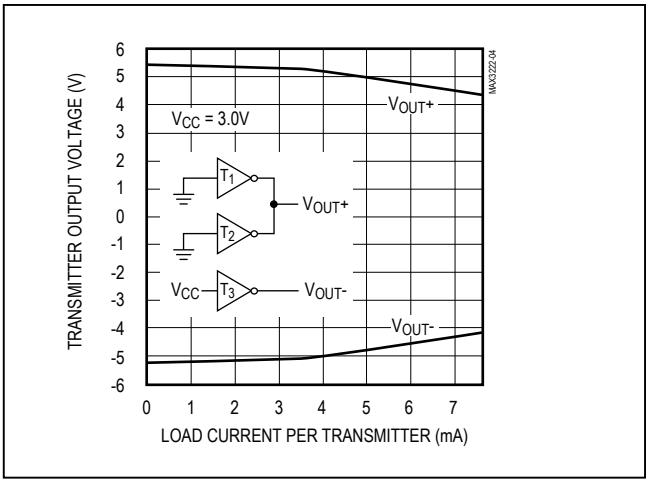

Figure 7a. MAX3243 Transmitter Output Voltage vs. Load Current per Transmitter

Power-Supply Decoupling

In most circumstances a 0.1µF bypass capacitor is adequate. In applications that are sensitive to power-supply noise, decouple V_{CC} to ground with a capacitor of the same value as the charge-pump capacitor C1. Connect bypass capacitors as close to the IC as possible.

Transmitter Outputs when Exiting Shutdown

Figure 6 shows two transmitter outputs when exiting shutdown mode. As they become active, the two transmitter outputs are shown going to opposite RS-232 levels. Each transmitter is loaded with 3kΩ in parallel with 2500pF. The transmitter outputs display no ringing or undesirable transients as they come out of shutdown. Note that the transmitters are enabled only when the magnitude of V- exceeds approximately 3V. Figure 7a shows the MAX3243's transmitter output voltage vs. current per transmitter. Figure 7b is a mouse driver test circuit.

Mouse Driveability (MAX3243)

The MAX3243 has been specifically designed to power serial mice while operating from low-voltage power supplies. It has been tested with samples of ten major mouse models from six manufacturers including the leading three: Logitech (5 models), Mouse Systems, and Microsoft. The MAX3243 successfully drove all serial mice and met their respective current and voltage requirements. Figure 7a shows the transmitter outputs under increasing load current. The MAX3243's switching regulator ensures the transmitters will supply at least ±5V during worst-case conditions. The AutoShutdown feature does not work with a mouse, so $\overline{\text{FORCEOFF}}$ and FORCEON should be connected to V_{CC}.

High Data Rates

The MAX3221/MAX3223/MAX3243 maintain the RS-232 ±5.0V minimum transmitter output voltage even at high data rates. Figure 8 shows a transmitter loopback test circuit. Figure 9 shows a loopback test result at 120kbps, and Figure 10 shows the same test at 235kbps. For Figure 9, all three transmitters were driv-en simultaneously at 120kbps into RS-232 loads in parallel with 1000pF. For Figure 10, a single transmitter was driven at 235kbps, but all three transmitters were loaded with an RS-232 receiver in parallel with 1000pF.

Interconnection with 3V and 5V Logic

The MAX3221/MAX3223/MAX3243 can directly interface with various 5V logic families, including ACT and HCT CMOS. See Table 4 for more information on possible combinations of interconnections.

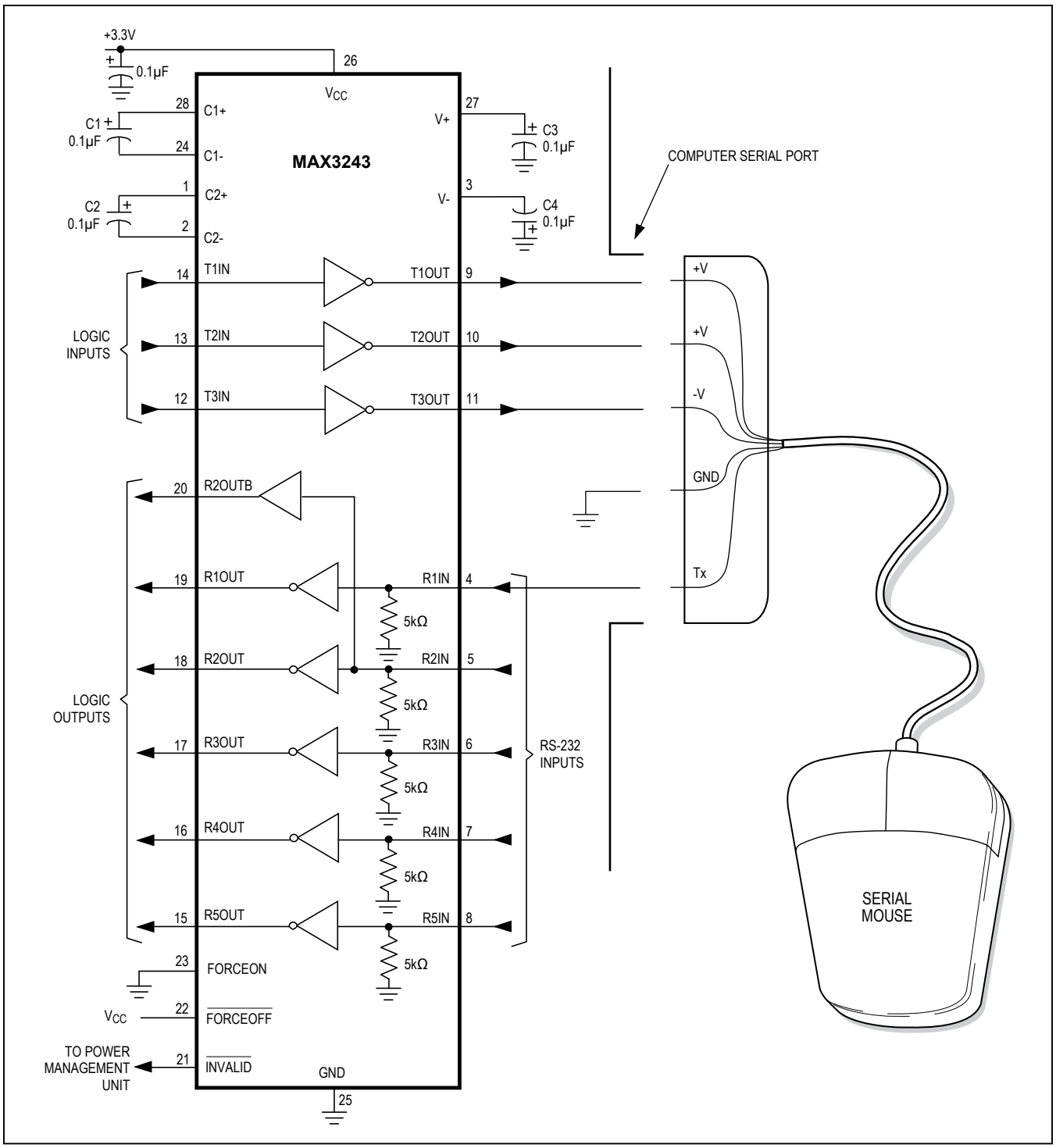

Figure 7b. Mouse Driver Test Circuit

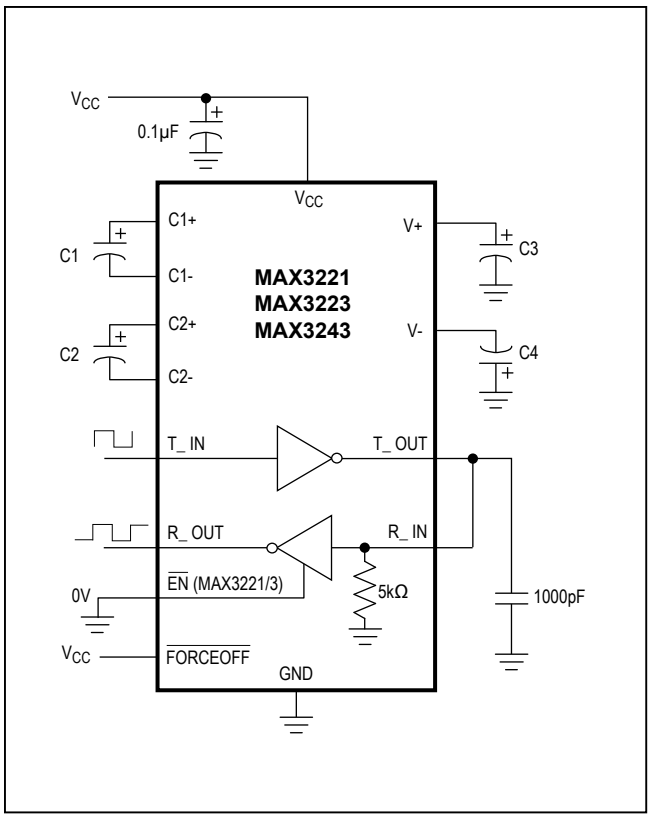

Figure 8. Loopback Test Circuit

Table 3. Required Capacitor Values

V_{CC} (V)	C1 (µF)	C2, C3, C4 (µF)
3.0 to 3.6	0.1	0.1
4.5 to 5.5	0.047	0.33
3.0 to 5.5	0.1	0.47

Table 4. Logic Family Compatibility with Various Supply Voltages

SYSTEM POWER-SUPPLY VOLTAGE (V)	V_{CC} SUPPLY VOLTAGE (V)	COMPATIBILITY
3.3	3.3	Compatible with all CMOS families.
5	5	Compatible with all TTL and CMOS-logic families.
5	3.3	Compatible with ACT and HCT CMOS, and with TTL. Incompatible with AC, HC, or CD4000 CMOS.

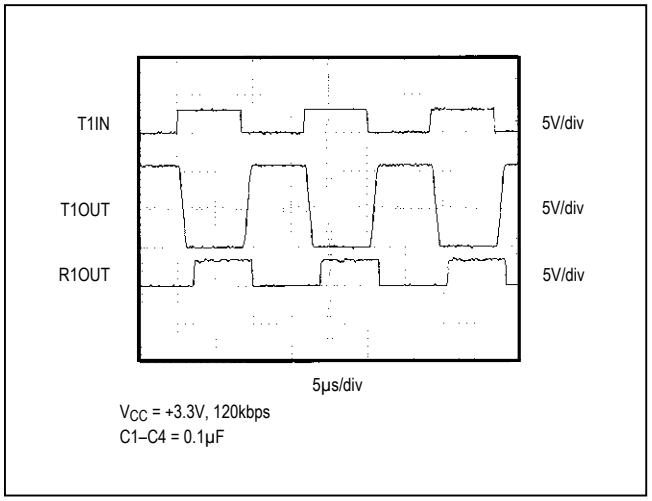

Figure 9. Loopback Test Result at 120kbps

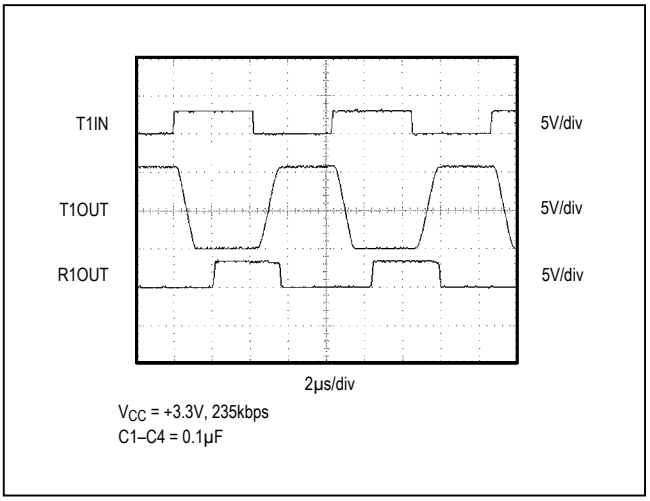

Figure 10. Loopback Test Result at 235kbps

Typical Operating Circuits

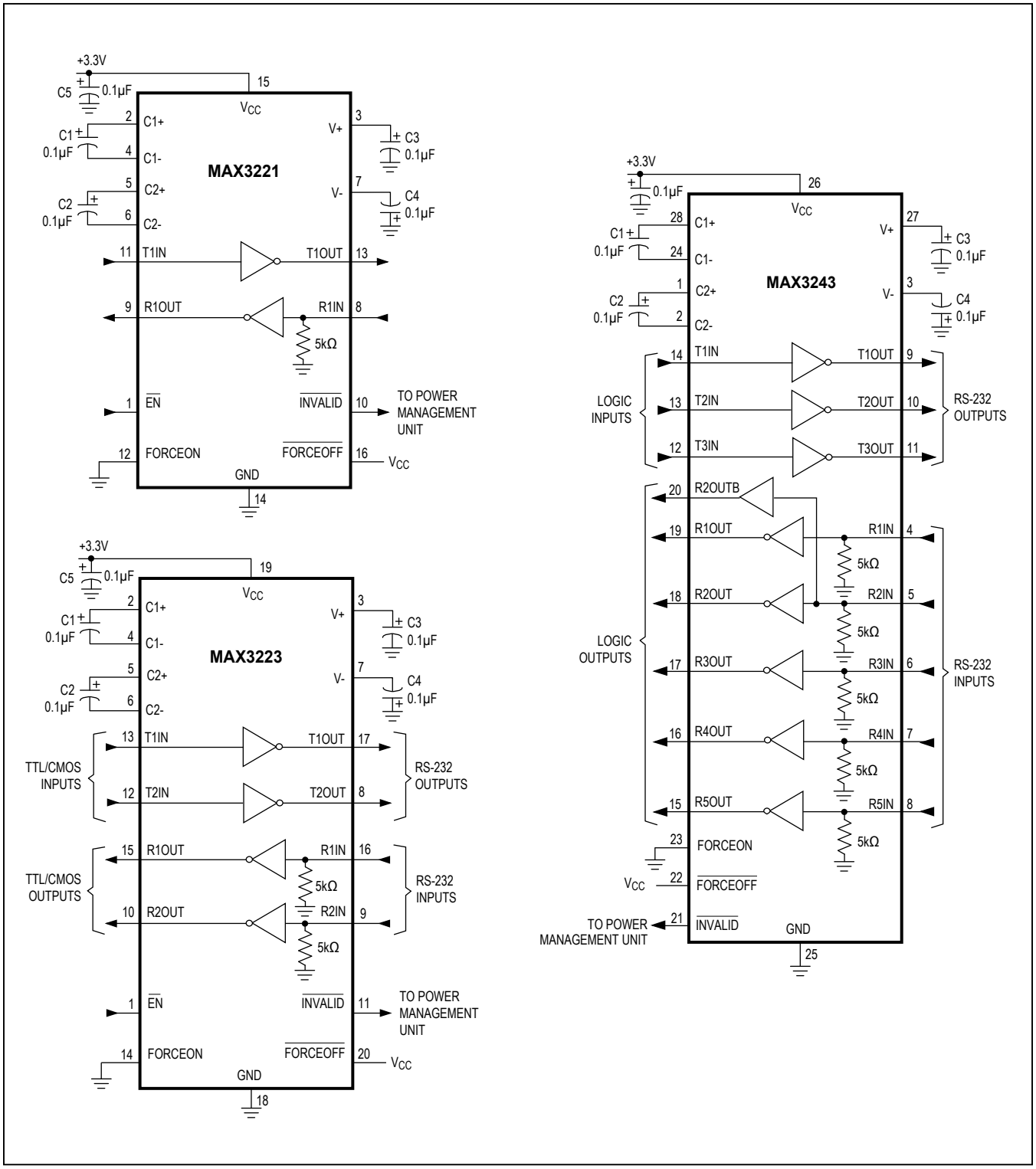

3V-Powered EIA/TIA-232 and EIA/TIA-562 Transceivers from Maxim

PART	POWER-SUPPLY VOLTAGE (V)	NUMBER OF TRANSMITTERS/ RECEIVERS	NUMBER OF RECEIVERS ACTIVE IN SHUTDOWN	GUARANTEED DATA RATE (kbps)	EIA/ TIA-232 OR 562	FEATURES
MAX212	3.0 to 3.6	3/5	5	120	232	Drives mice
MAX218	1.8 to 4.25	2/2	2	120	232	Operates directly from batteries without a voltage regulator
MAX562	2.7 to 5.25	3/5	5	230	562	230kbps guaranteed data rate
MAX563	3.0 to 3.6	2/2	2	120	562	0.1µF capacitors
MAX3212	2.7 to 3.6	3/5	5	235	232	AutoShutdown, complementary receiver, drives mice, transient detection
MAX3221	3.0 to 5.5	1/1	1	120	232	0.1µF capacitors, 16-pin SSOP
MAX3222	3.0 to 5.5	2/2	2	120	232	0.1µF capacitors, MAX242 pinout
MAX3223	3.0 to 5.5	2/2	2	120	232	0.1µF capacitors, AutoShutdown
MAX3232	3.0 to 5.5	2/2	N/A	120	232	0.1µF capacitors, MAX232 pinout
MAX3241	3.0 to 5.5	3/5	5	120	232	0.1µF capacitors, 2 complementary receivers, drives mice
MAX3243	3.0 to 5.5	3/5	1	120	232	0.1µF capacitors, AutoShutdown complementary receiver, drives mice

Pin Configurations

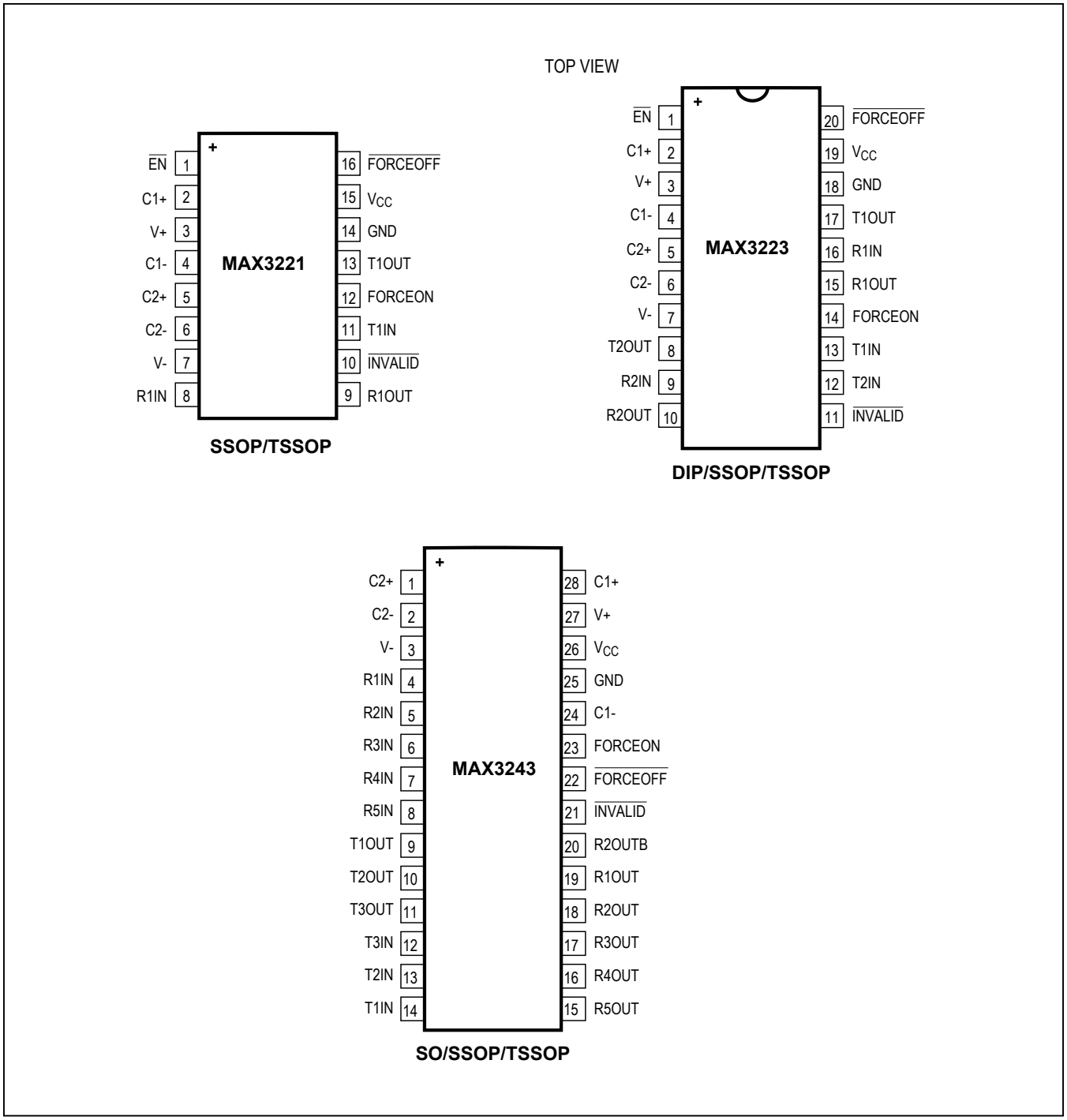

Package Information

For the latest package outline information and land patterns (footprints), go to **www.maximintegrated.com/packages**. Note that a "+", "#", or "-" in the package code indicates RoHS status only. Package drawings may show a different suffix character, but the drawing pertains to the package regardless of RoHS status.

PACKAGE TYPE	PACKAGE CODE	OUTLINE NO.	LAND PATTERN NO.	THERMAL RESISTANCE (SINGLE LAYER BOARD)		THERMAL RESISTANCE (MULTI LAYER BOARD)	
				θ_{JA} (°C/W)	θ_{JC} (°C/W)	θ_{JA} (°C/W)	θ_{JC} (°C/W)
16 SSOP	A16+2	21-0056	90-0106	140	34	86	33
16 TSSOP	U16+1	21-0066	90-0117	106	27	90	27
20 Plastic DIP	P20+2	21-0043	—	90	30	NA	NA
20 SSOP	A20+1	21-0056	90-0094	125	33	84	32
20 TSSOP	U20+2	21-0066	90-0116	91	20	73.8	20
28 Wide SO	W28+1	21-0042	90-0109	80	18	59	18
28 SSOP	A28+1	21-0056	90-0095	110	25	67.1	25
28 TSSOP	U28+2	21-0066	90-0171	78	13	71.6	13

REVISION NUMBER	REVISION DATE	DESCRIPTION	PAGES CHANGED
9	1/15	Updated *General Description* and *Benefits and Features* sections	1
10	5/2019	Added *Package Information* table	15

For pricing, delivery, and ordering information, please visit Maxim Integrated's online storefront at https://www.maximintegrated.com/en/storefront/storefront.html.

Maxim Integrated cannot assume responsibility for use of any circuitry other than circuitry entirely embodied in a Maxim Integrated product. No circuit patent licenses are implied. Maxim Integrated reserves the right to change the circuitry and specifications without notice at any time. The parametric values (min and max limits) shown in the Electrical Characteristics table are guaranteed. Other parametric values quoted in this data sheet are provided for guidance.

Maxim Integrated and the Maxim Integrated logo are trademarks of Maxim Integrated Products, Inc. © 2019 Maxim Integrated Products, Inc.