19-3015; Rev 3; 2/07

622Mbps, Low-Noise, High-Gain Transimpedance Preamplifier

General Description

The MAX3658 is a transimpedance preamplifier for receivers operating up to 622Mbps. Low noise, high gain, and low power dissipation make it ideal for fiber access and small form-factor transceivers.

The MAX3658 features 45nA input-referred noise, 18kΩ transimpedance gain, 580MHz bandwidth, and 2mA$_{P-P}$ input overload. Operating from a +3.3V supply, the MAX3658 consumes only 66mW. An integrated filter resistor provides positive bias for the photodiode. These features, combined with a small die size, allow easy assembly into a TO-46 header with a photodiode. The MAX3658 also includes an average photocurrent monitor.

The MAX3658 has typical optical sensitivity of -33dBm (0.9A/W), which exceeds the class-B APON requirements. Typical optical overload is 1dBm. The MAX3658 is available in die form with both output polarities (MAX3658A and MAX3658B). The MAX3658A is also available in a 3mm x 3mm 8-pin TDFN package.

Applications

Optical Receivers (Up to 622Mbps Operation)

Passive Optical Networks

SFF/SFP Transceivers

FTTx Transceivers

Pin Configuration appears at end of data sheet.

Features

- **45nA$_{RMS}$ Noise, -33dBm Sensitivity**
- **18.3kΩ Transimpedance Gain**
- **580MHz Bandwidth**
- **2mA$_{P-P}$ Input Overload, 1dBm Overload**
- **66mW Power Dissipation**
- **3.3V Operation**
- **Average Photocurrent Monitor**

Ordering Information

PART	TEMP RANGE	PIN-PACKAGE	PKG CODE
MAX3658AETA	-40°C to +85°C	8 TDFN (3mm x 3mm)	T833-3
MAX3658AETA+	-40°C to +85°C	8 TDFN (3mm x 3mm)	T833-3
MAX3658AE/D	—	Dice*	—
MAX3658BE/D	—	Dice*	—

+Denotes lead-free package.

**Dice are designed to operate over a -40°C to +100°C junction temperature (T_J) range, but are tested and guaranteed at T_A = +25°C.*

Typical Operating Circuit

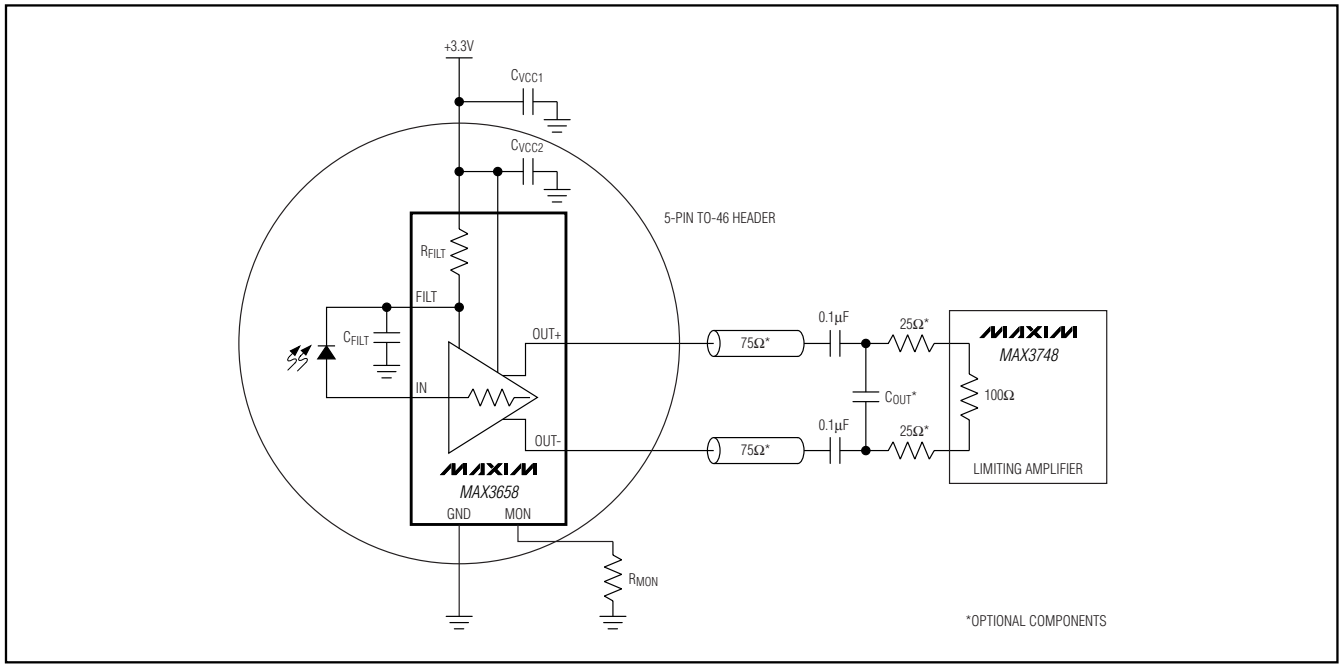

For pricing, delivery, and ordering information, please contact Maxim/Dallas Direct! at 1-888-629-4642, or visit Maxim's website at www.maxim-ic.com.

622Mbps, Low-Noise, High-Gain Transimpedance Preamplifier

ABSOLUTE MAXIMUM RATINGS

Supply Voltage (V_{CC}) .....-0.5V to +4.2V
Current into IN .....+5mA
Voltage at OUT+, OUT- .....(V_{CC} - 1.2V) to (V_{CC} + 0.5V)
Voltage FILT, MON .....-0.5V to (V_{CC} + 0.5V)
Continuous Power Dissipation (T_A = +85°C)
8-Lead TDFN (derate 24.4mW/°C above +85°C) 1951.2mW
Operating Temperature Range .....-40°C to +85°C
Operating Junction Temperature Range (die) ....-40°C to +150°C
Storage Temperature Range .....-55°C to +150°C
Die Attach Temperature .....+400°C
Lead Temperature (soldering, 10s) .....+300°C

Stresses beyond those listed under "Absolute Maximum Ratings" may cause permanent damage to the device. These are stress ratings only, and functional operation of the device at these or any other conditions beyond those indicated in the operational sections of the specifications is not implied. Exposure to absolute maximum rating conditions for extended periods may affect device reliability.

DC ELECTRICAL CHARACTERISTICS

(V_{CC} = +2.97V to +3.63V, 150Ω load between OUT+ and OUT-, T_j = -40°C to +100°C. Typical values are at V_{CC} = +3.3V and T_A = +25°C, unless otherwise noted.)

PARAMETER	SYMBOL	CONDITIONS	MIN	TYP	MAX	UNITS
Supply Current	I_{CC}			20	26	mA
Input Bias Voltage	V_{IN}	I_{IN} = 1µA		0.83	1.0	V
Transimpedance Linear Range		0.95 < linearity < 1.05	4			$µA_{P-P}$
Small-Signal Transimpedance	Z_{21}	I_{IN} < $2µA_{P-P}$	15.7	18.3	20.9	kΩ
Output Common-Mode Voltage		AC-coupled output		V_{CC} - 0.125		V
Differential Output Offset	ΔV_{OUT}	I_{IN} = 1.3mA		±2		mV
Output Impedance	Z_{OUT}	Single ended	60	75	90	Ω
Maximum Output Voltage	$V_{OUT(MAX)}$	I_{IN} = $2mA_{P-P}$	150	240	400	mV_{P-P}
Filter Resistor	R_{FILT}	I_{IN} = 4µA	15	20	25	kΩ
		I_{IN} = 1.3mA	300	500	700	Ω
Offset-Correction Disable Threshold		Voltage applied at FILT		0.4		V
Input Resistance		FILT = 0V		400		Ω
Nominal MON Current Gain	G_{MON}	I_{MON} / I_{IN} (I_{IN} = 1mA, 3.3V, +25°C)	0.8	1	1.2	A/A
MON Output Voltage Range	V_{MON}		0		2.2	V
MON Accuracy (Note 1)		1µA ≤ I_{IN} < 2µA	-2.5		+2.5	dB
		2µA ≤ I_{IN} < 5µA	-2		+2	
		5µA ≤ I_{IN} < 1mA	-1.5		+1.5	

Note 1: Accuracy is defined as $10_{log}(I_{MON} / I_{IN})$.

AC ELECTRICAL CHARACTERISTICS

(V_{CC} = +2.97V to +3.63V, 150Ω load between OUT+ and OUT-, C_{IN} = 0.5pF total, C_{FILT} = 400pF, C_{VCC2} = 1nF, T_j = -40°C to +100°C, T_A = -40°C to +85°C. Typical values are at V_{CC} = +3.3V and T_A = +25°C, unless otherwise noted. AC characteristics are guaranteed by design and characterization.)

PARAMETER	SYMBOL	CONDITIONS	MIN	TYP	MAX	UNITS
Bandwidth	BW	(Note 2)	435	580		MHz
Input-Referred Noise	i_n	BW = 467MHz		45	55	nA_{RMS}
Noise Density		BW = 467MHz		2.1		$pA/\sqrt{Hz}$
Low-Frequency Cutoff		I_{IN} = 1µA			30	kHz
Deterministic Jitter (Note 3)	DJ	$2\mu A_{P-P} \le I_{IN} < 10\mu A_{P-P}$			150	ps_{P-P}
		$10\mu A_{P-P} \le I_{IN} < 2mA_{P-P}$			260	
Optical Overload	PIN(MAX)	1.0A/W photodiode at 622 Mbps		+1		dBm
		1.0A/W photodiode at 155 Mbps		-7.2		
Optical Sensitivity	PIN(MIN)	0.9A/W photodiode		-33		dBm

Note 2: -3dB bandwidth is measured relative to the gain at 10MHz.

Note 3: Measured using a pattern equivalent to 2^{23} - 1 PRBS with 72 CIDs at 622Mbps.

Typical Operating Characteristics

(V_{CC} = +3.3V, C_{IN} = 0.5pF, T_A = +25°C, unless otherwise noted.)

SMALL-SIGNAL TRANSIMPEDANCE vs. TEMPERATURE

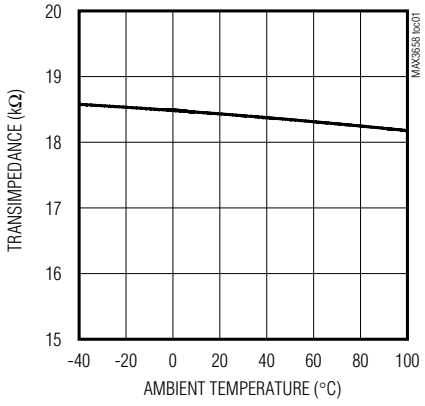

SUPPLY CURRENT vs. TEMPERATURE

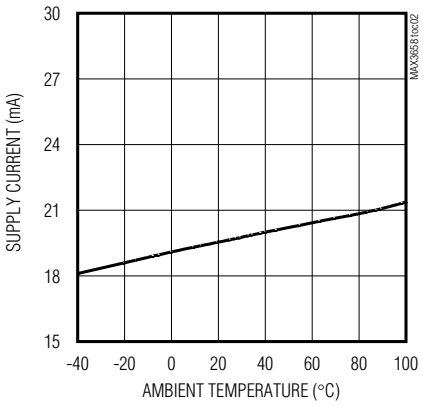

MONITOR CURRENT vs. DC INPUT CURRENT

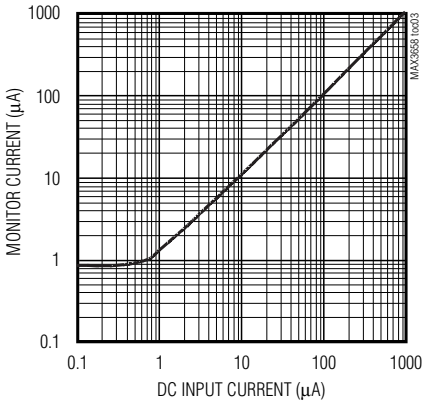

622Mbps, Low-Noise, High-Gain Transimpedance Preamplifier

Typical Operating Characteristics (continued)

(V_{CC} = +3.3V, C_{IN} = 0.5pF, T_A = +25°C, unless otherwise noted.)

FILTER VOLTAGE vs. DC INPUT CURRENT

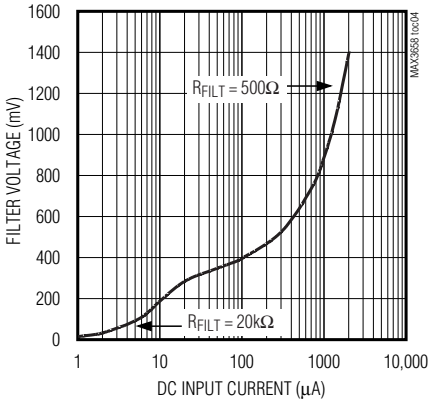

DETERMINISTIC JITTER vs. INPUT CURRENT AMPLITUDE

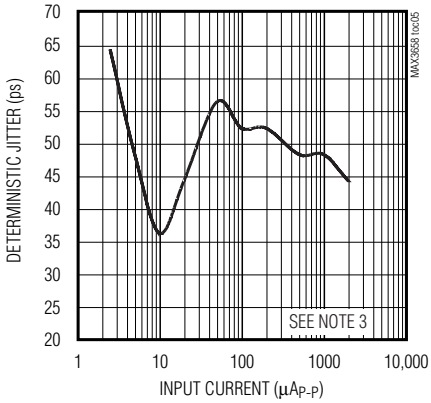

SMALL-SIGNAL LOW-FREQUENCY CUTOFF vs. DC INPUT CURRENT

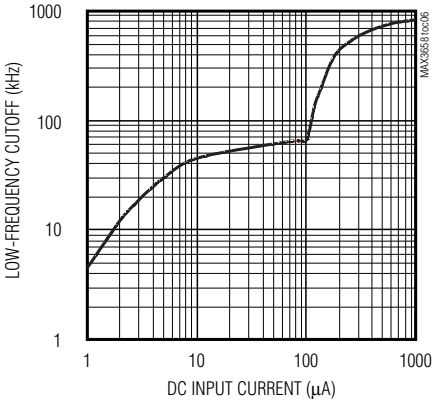

DIFFERENTIAL OUTPUT VOLTAGE vs. INPUT CURRENT

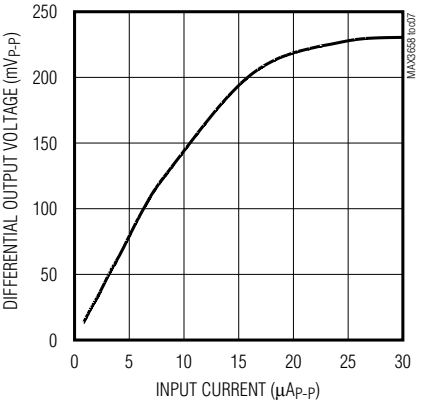

FREQUENCY RESPONSE

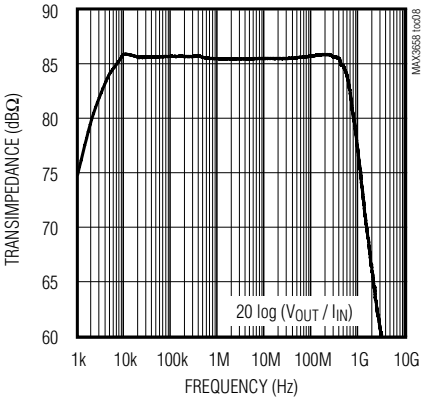

BANDWIDTH vs. INPUT CAPACITANCE

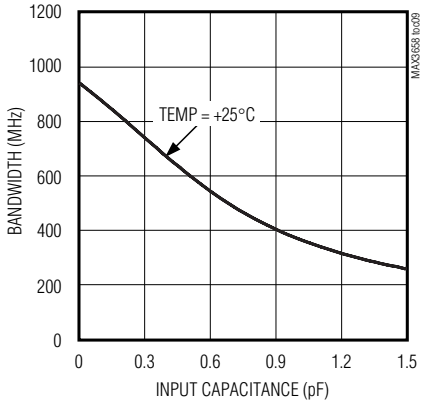

INPUT-REFERRED RMS NOISE vs. INPUT CAPACITANCE

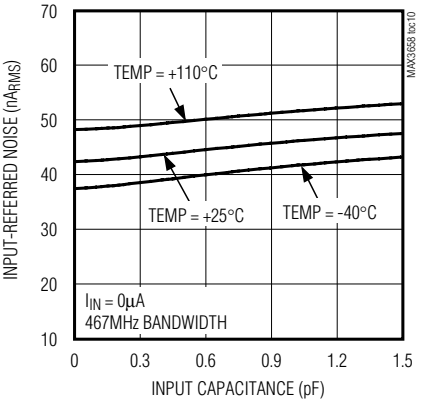

INPUT-REFERRED RMS NOISE vs. DC INPUT CURRENT

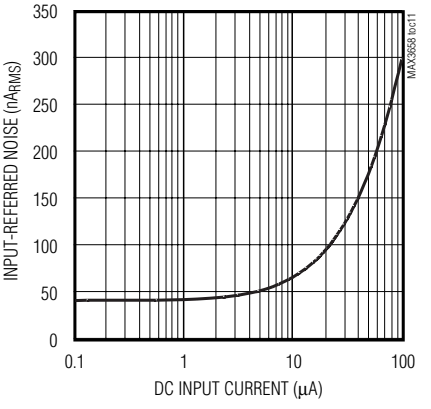

OUTPUT EYE DIAGRAM (2µA ELECTRICAL INPUT)

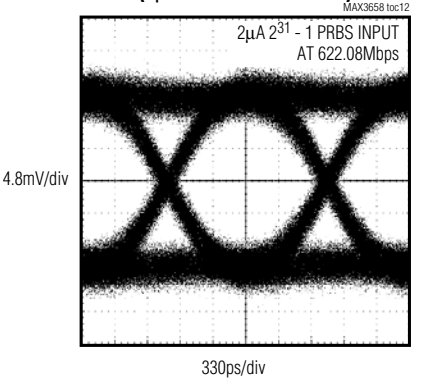

Typical Operating Characteristics (continued)

(V_{CC} = +3.3V, C_{IN} = 0.5pF, T_A = +25°C, unless otherwise noted.)

OUTPUT EYE DIAGRAM (-28dBm OPTICAL INPUT)

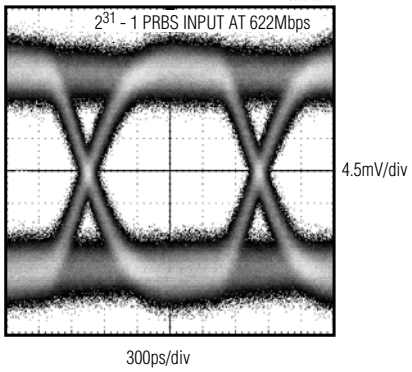

OUTPUT EYE DIAGRAM (0dBm OPTICAL INPUT)

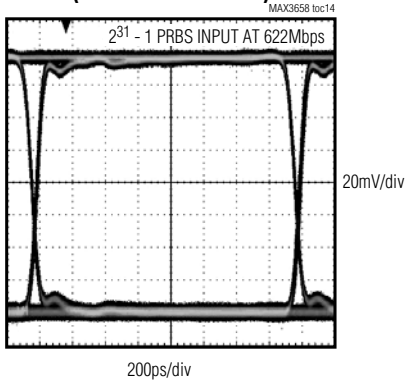

Pin Description

PIN	NAME	FUNCTION
1	V_{CC}	+3.3V Supply Voltage
2	IN	Signal Input. Connect to photodiode anode.
3	FILT	Optional Filter Connection. Use to bias the photodiode cathode. An internal on-chip resistive network is connected between this pin and V_{CC}; an external decoupling capacitor connected to this pin forms a filter (see the *Design Procedure* section). Leave this pin open if a filter is not required.
4	MON	Optional Photocurrent Monitor. This is a current output. Connect a resistor between MON and ground to monitor the average photocurrent. Leave this pin open if a monitor is not required.
5, 8	GND	Circuit Ground
6	OUT+	Positive 75Ω Data Output. Increasing input current causes OUT+ to increase.
7	OUT-	Negative 75Ω Data Output. Increasing input current causes OUT- to decrease.

622Mbps, Low-Noise, High-Gain Transimpedance Preamplifier

Functional Diagram

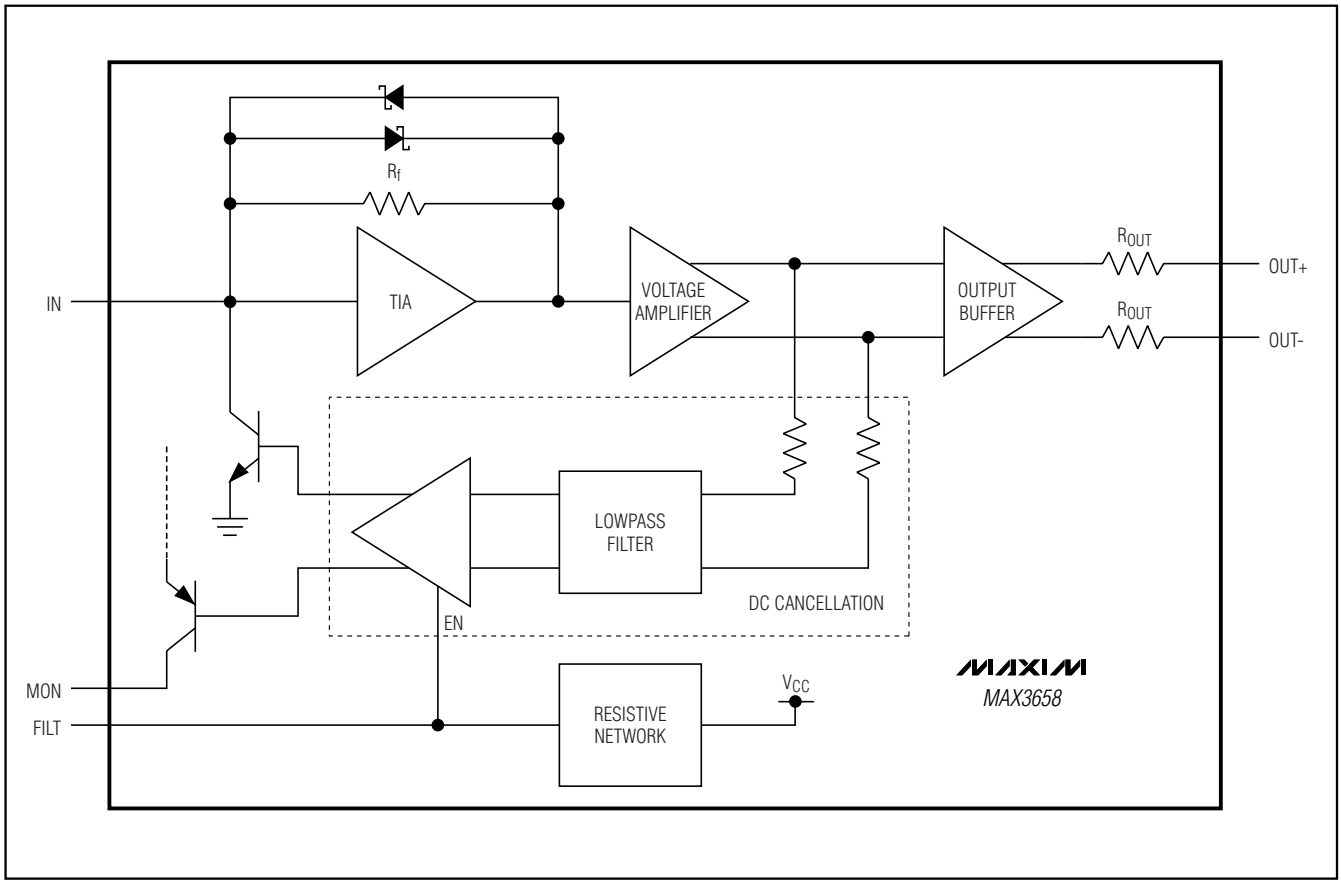

Detailed Description

The MAX3658 transimpedance amplifier is designed for 622Mbps fiber optic applications. The MAX3658 is comprised of a transimpedance amplifier, a voltage amplifier, an output buffer, a DC cancellation circuit, and a photocurrent monitor.

Transimpedance Amplifier

The signal current at the input flows into the summing node of a high-gain amplifier. Shunt feedback through resistor R_F converts this current into a voltage. Schottky diodes clamp the output signal for large input currents (Figure 1).

Voltage Amplifier

The voltage amplifier provides additional gain and converts the transimpedance amplifier single-ended output into a differential signal.

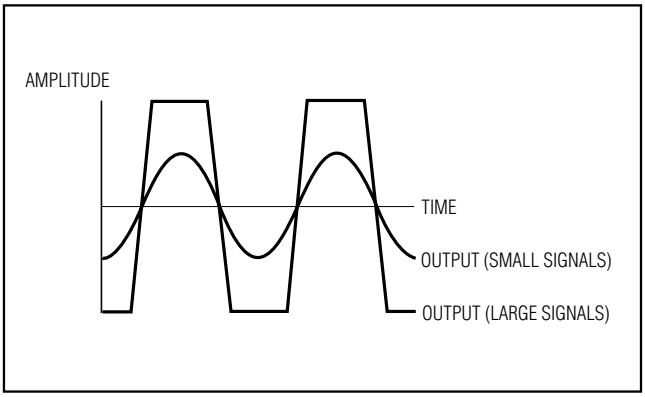

Figure 1. MAX3658 Limited Output

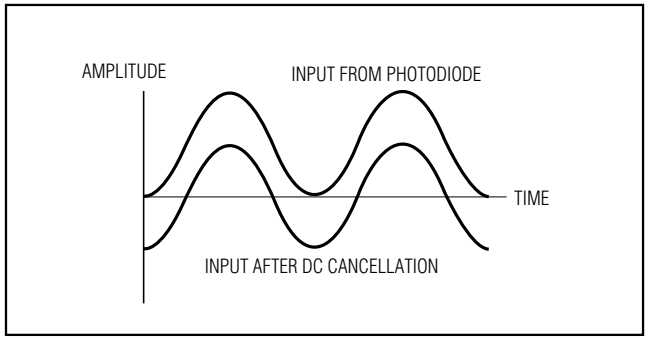

Figure 2. DC Cancellation Effect on Input

Output Buffer

The output buffer is designed to drive a 150Ω differential load between OUT+ and OUT-. For optimum supply noise rejection, the MAX3658 should be terminated with a differential load. The MAX3658 single-ended outputs do not drive a DC-coupled grounded load. The outputs should be AC-coupled or terminated to V_{CC}. If a single-ended output is required, both the used and the unused outputs should be terminated in a similar manner (see the *Interface Schematics* section).

DC Cancellation Circuit

The DC cancellation circuit uses low-frequency feedback to remove the DC component of the input signal (Figure 2). This feature centers the input signal within the transimpedance amplifier's linear range, thereby reducing pulse-width distortion.

The DC cancellation circuit is internally compensated and does not require external capacitors. This circuit minimizes pulse-width distortion for data sequences that exhibit a 50% mark density. A mark density significantly different from 50% causes the MAX3658 to generate pulse-width distortion. Grounding the FILT pin disables the DC cancellation circuit. For normal operation, the DC cancellation circuit must be enabled.

The DC cancellation current is drawn from the input and creates noise. For low-level signals with little or no DC component, the added noise is insignificant. However, amplifier noise increases for signals with significant DC component (see the *Typical Operating Characteristics*).

Photocurrent Monitor

The MAX3658 includes an average photocurrent monitor. The current sourced from MON to ground is approximately equal to the DC current at IN.

Design Procedure

Select Photodiode

Noise performance and bandwidth are adversely affected by capacitance on the TIA input node. Select a low-capacitance photodiode to minimize the total input capacitance on this pin. The MAX3658 is optimized for 0.5pF of capacitance on the input. Assembling the MAX3658 in die form using chip and wire technology provides the lowest capacitance input and the best possible performance.

Select C_{FILT}

Supply voltage noise at the cathode of the photodiode produces a current $i = C_{PD}\ dv/dt$, which reduces the receiver sensitivity (C_{PD} is the photodiode capacitance). The filter resistor of the MAX3658 combined with an external capacitor, can be used to reduce the effect of supply noise on performance (see the *Typical Operating Circuit*). Current generated by supply noise voltage is divided between C_{FILT} and C_{PD}. To obtain a good optical sensitivity select $C_{FILT} \approx 400pF$.

Select Supply Filter

Sensitive optical receivers require wide-band power-supply decoupling. Power-supply bypassing should provide low impedance between V_{CC} and ground for frequencies between 10kHz and 700MHz. Isolate the MAX3658 from noise sources with LC supply filters and shielding. Place a supply filter (C_{VCC2}) as close to the MAX3658 as possible.

Select R_{MON}

If photocurrent monitoring is desired, connect a resistor between MON and ground to monitor the average photocurrent. Select R_{MON} as large as possible:

$$R_{MON} = \frac{2.2V}{I_{MONMAX}}$$

where I_{MONMAX} is the largest average input current observed. An ammeter can also monitor the current out of the MON pin.

Select Coupling Capacitors

A receiver built with the MAX3658 will have a bandpass frequency response. The low-frequency cutoff due to the coupling capacitors and load resistors is:

$$LFC_{TERM} = \frac{1}{2\pi \times R_{LOAD} \times C_{COUPLE}}$$

622Mbps, Low-Noise, High-Gain Transimpedance Preamplifier

Select C_{COUPLE} so the low-frequency cutoff due to the load resistors and coupling capacitors is much lower than the low-frequency cutoff of the MAX3658. The coupling capacitor should be 0.1µF or larger for SONET data. For lowest jitter, 1.0µF is recommended. Refer to application note HFAN-01.1: *Choosing AC-Coupling Capacitors* for a more detailed discussion on choosing AC-coupling capacitors.

Select Output Filter

Input sensitivity is improved by adding a filter between TIA and the quantizer/limiting amplifier, with 0.5pF input capacitance. Typical bandwidth of the MAX3658 is 580MHz; the highest expected bandwidth is 730MHz.

Layout Considerations

Figure 3 shows suggested layouts for 4- and 5-pin TO headers.

Wire Bonding

For high-current density and reliable operation, the MAX3658 uses gold metalization. For best results, use gold-wire ball-bonding techniques. Use caution when wedge bonding. Die-size is 52 mils x 29 mils, (1.32mm x 0.736mm) and die thickness is 15 mils (380µm). The bond-pad passivation opening is 75µm and bond-pad metal thickness is 5µm. Refer to Maxim application note HFAN-08.0.1: *Understanding Bonding Coordinates and Physical Die Size* for additional information on bond-pad coordinates.

Applications Information

Optical Power Relations

Many of the MAX3658 specifications relate to the input signal amplitude. When working with optical receivers, the input is sometimes expressed in terms of average optical power and extinction ratio. Figure 4 and Table 1 show relations that are helpful for converting optical power to input signal when designing with the MAX3658.

Optical Sensitivity Calculation

The input-referred RMS noise current (i_n) of the MAX3658 generally determines the receiver sensitivity. To obtain a system bit-error rate (BER) of 1E-10, the signal-to-noise ratio must always exceed 12.7. The input sensitivity, expressed in average power, can be estimated as:

$$SENSITIVITY = 10\log\left(\frac{12.7 \times i_n \times (r_e + 1)}{2 \times \rho \times (r_e - 1)} \times 1000\right) dBm$$

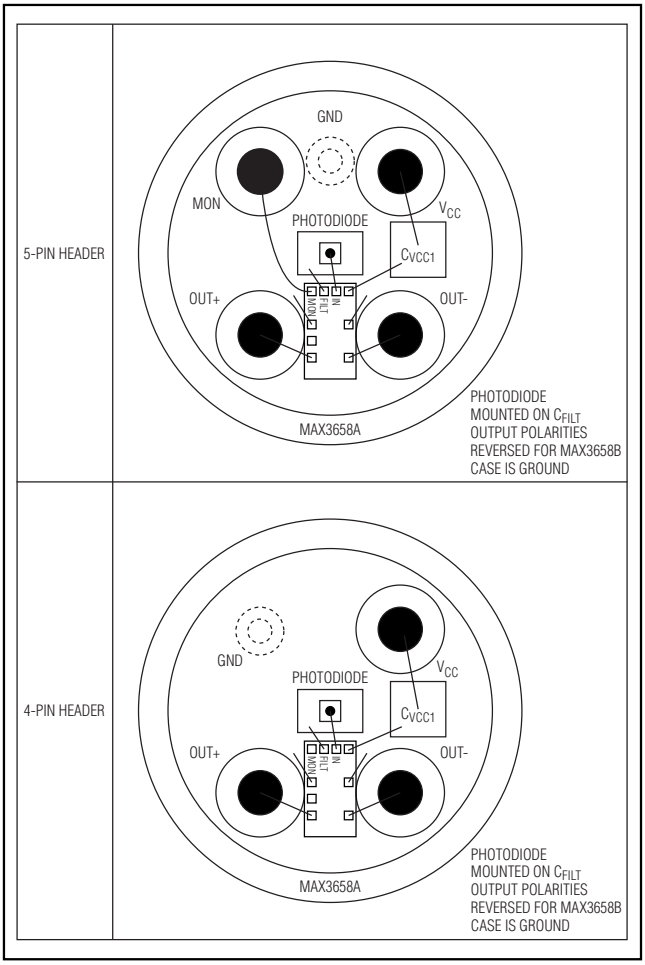

Figure 3. Suggested TO Header Layouts

Table 1. Optical Power Relations*

PARAMETER	SYMBOL	RELATION
Average Power	P_{AVG}	$P_{AVG} = \frac{P0 + P1}{2}$
Extinction Ratio	r_e	$r_e = \frac{P1}{P0}$
Optical Power of a 1	P1	$P1 = 2P_{AVG}\frac{r_e}{r_e + 1}$
Optical Power of a 0	P0	$P0 = \frac{2P_{AVG}}{r_e + 1}$
Optical Modulation Amplitude	P_{IN}	$P_{IN} = P1 - P0 = 2P_{AVG}\frac{r_e - 1}{r_e + 1}$

**Assuming a 50% average mark density.*

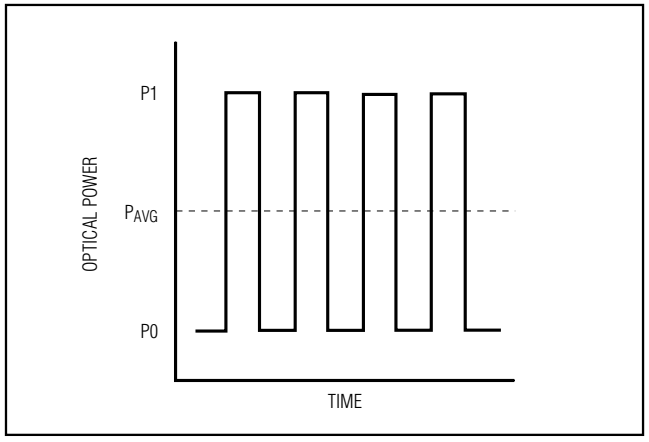

Figure 4. Optical Power Relations

where ρ is the photodiode responsivity in A/W and i_n is the RMS noise current in amps. For example, with photodiode responsivity of 0.9A/W, an extinction ratio of 10 and 45nA input-referred noise, the sensitivity of the MAX3658 is:

$$\text{SENSITIVITY} = 10\log\left(\frac{12.7 \times 45\text{nA} \times 11}{2 \times 0.9\text{A/W} \times 9} \times 1000\right)\text{dBm}$$
$$= -34\text{dBm}$$

Actual results may vary depending on supply noise, output filter, limiting amplifier sensitivity, and other factors (refer to application note HFAN-03.0.0: *Accurately Estimating Optical Receiver Sensitivity*).

Maxim obtains -33dBm typ sensitivity combined with the MAX3748.

Input Optical Overload

Overload is the largest input that the MAX3658 accepts while meeting the pulse-width distortion specification. Optical overload can be estimated in terms of average power with the following equation:

$$\text{OVERLOAD} = 10\log\left(\frac{2\text{mA}}{2 \times \rho} \times 1000\right)\text{dBm}$$

For example, if photodiode responsivity is 1.0A/W, the input overload is 0dBm.

Optical Linear Range

The MAX3658 has high gain, which limits the output for large input signals. The MAX3658 operates in a linear range for inputs not exceeding:

$$\text{LINEAR RANGE} = 10\log\left(\frac{4\mu\text{A} \times (r_e + 1)}{2 \times \rho \times (r_e - 1)} \times 1000\right)\text{dBm}$$

For example, with photodiode responsivity of 0.9A/W and an extinction ratio of 10, the linear range is:

$$\text{LINEARRANGE} = 10\log\left(\frac{4\mu\text{A} \times 11}{2 \times 0.9 \times 9} \times 1000\right)\text{dBm}$$
$$= -25\text{dBm}$$

Interface Schematics

Equivalent Output Interface

The MAX3658 has a differential output structure with 75Ω termination (150Ω differential). Figure 5 is a simplified diagram of the output interface. Common test equipment is designed with a 50Ω single-ended termination (100Ω differential). Figures 6a and 6b show alternate interface schemes for the MAX3658.

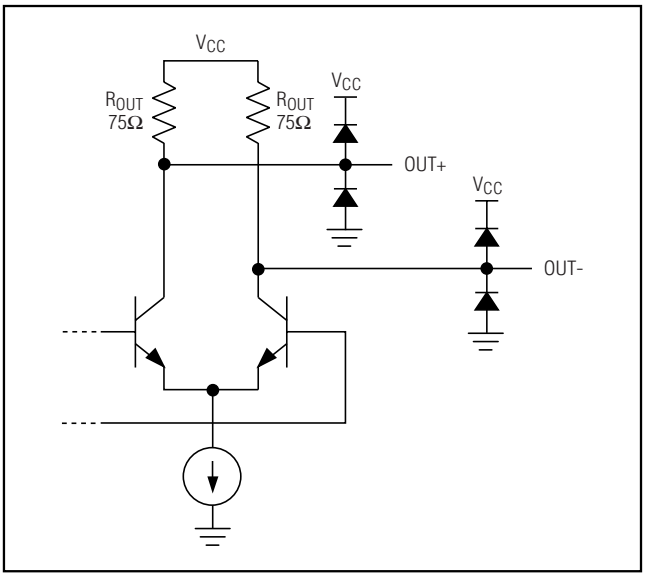

Figure 5. Equivalent Output Interface

622Mbps, Low-Noise, High-Gain Transimpedance Preamplifier

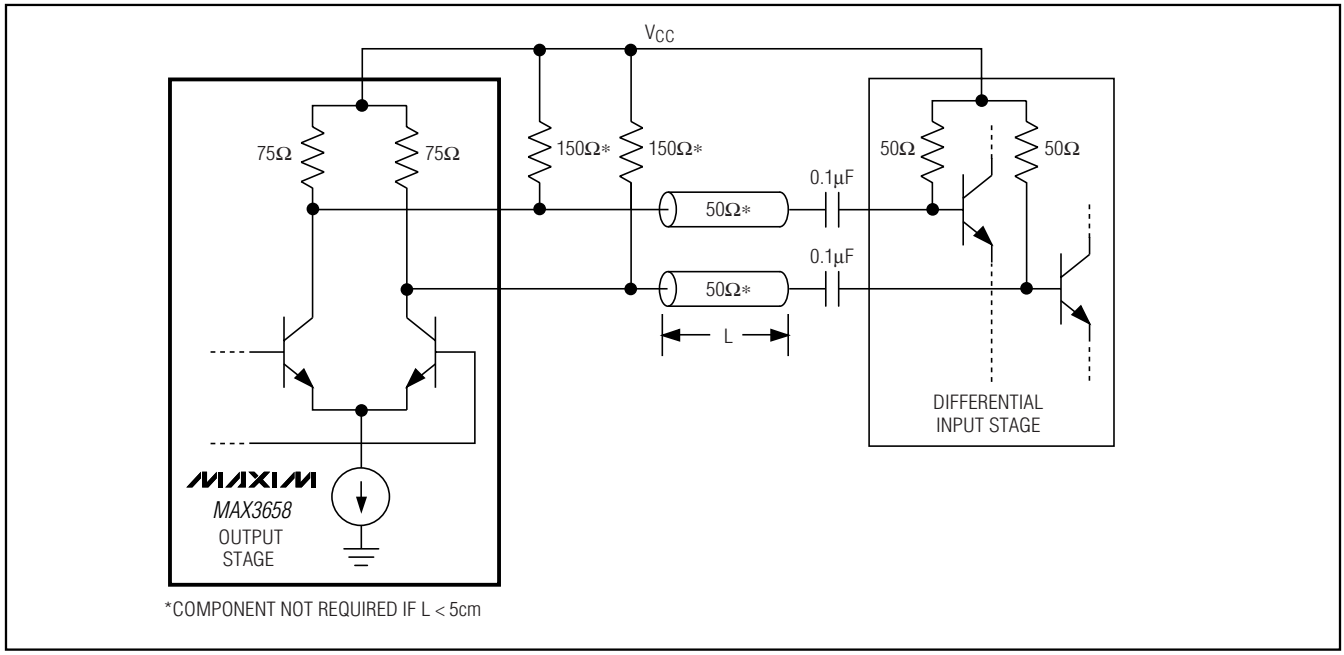

Figure 6a. 50Ω AC-Coupled Interface

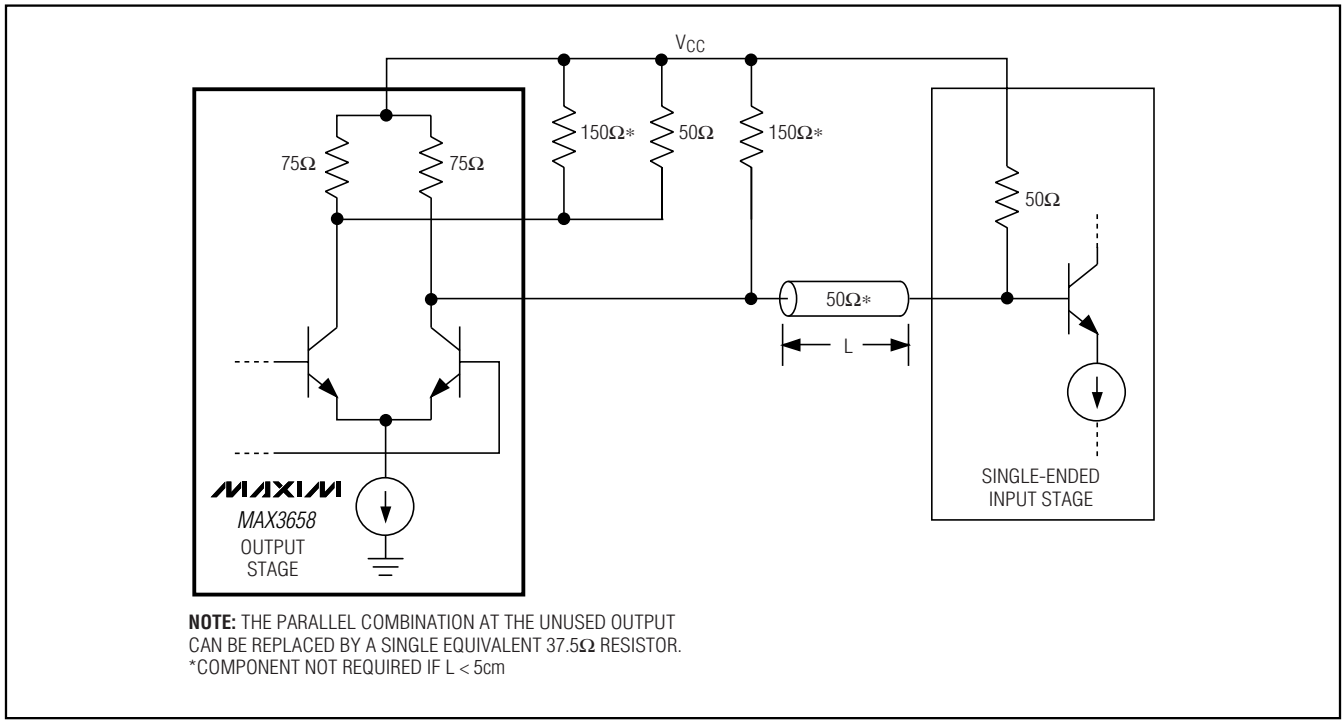

Figure 6b. 50Ω DC-Coupled Single-Ended Output Interface

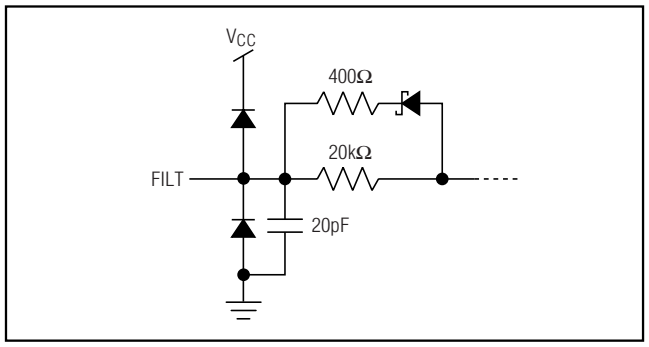

Figure 7. FILT Interface

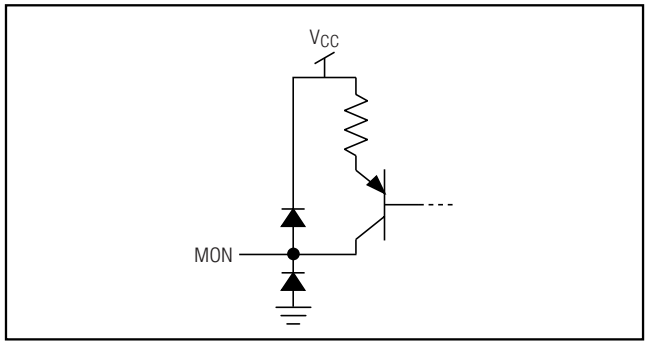

Figure 8. MON Interface

Pin Configuration

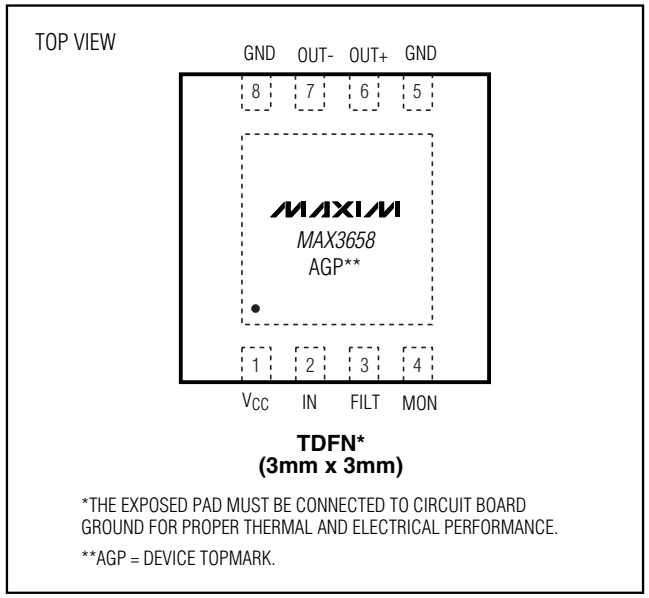

TDFN*
(3mm x 3mm)

*THE EXPOSED PAD MUST BE CONNECTED TO CIRCUIT BOARD GROUND FOR PROPER THERMAL AND ELECTRICAL PERFORMANCE.

**AGP = DEVICE TOPMARK.

Pad Coordinates

Table 2 gives center pad coordinates for the MAX3658 bond pads. Refer to application note HFAN-08.0.1: *Understanding Bonding Coordinates and Physical Die Size* for more information on bond-pad coordinates.

Table 2. Bond-Pad Information

PAD	NAME		COORDINATES (µm)	
	MAX3658A	MAX3658B	X	Y
BP1	MON	MON	16.6	818.6
BP2	GND	GND	18.0	543.4
BP3	N.C.	N.C.	18.0	425.8
BP4	OUT+	OUT-	16.6	39.4
BP5	OUT-	OUT+	445.0	39.4
BP6	N.C.	N.C.	456.2	155.6
BP7	GND	GND	455.0	565.8
BP8	VCC	VCC	455.0	818.6
BP9	IN	IN	254.6	818.6
BP10	FILT	FILT	135.6	818.6

Chip Information

TRANSISTOR COUNT: 833

PROCESS: GST-4

622Mbps, Low-Noise, High-Gain Transimpedance Preamplifier

Chip Topographies

Topography for MAX3658A

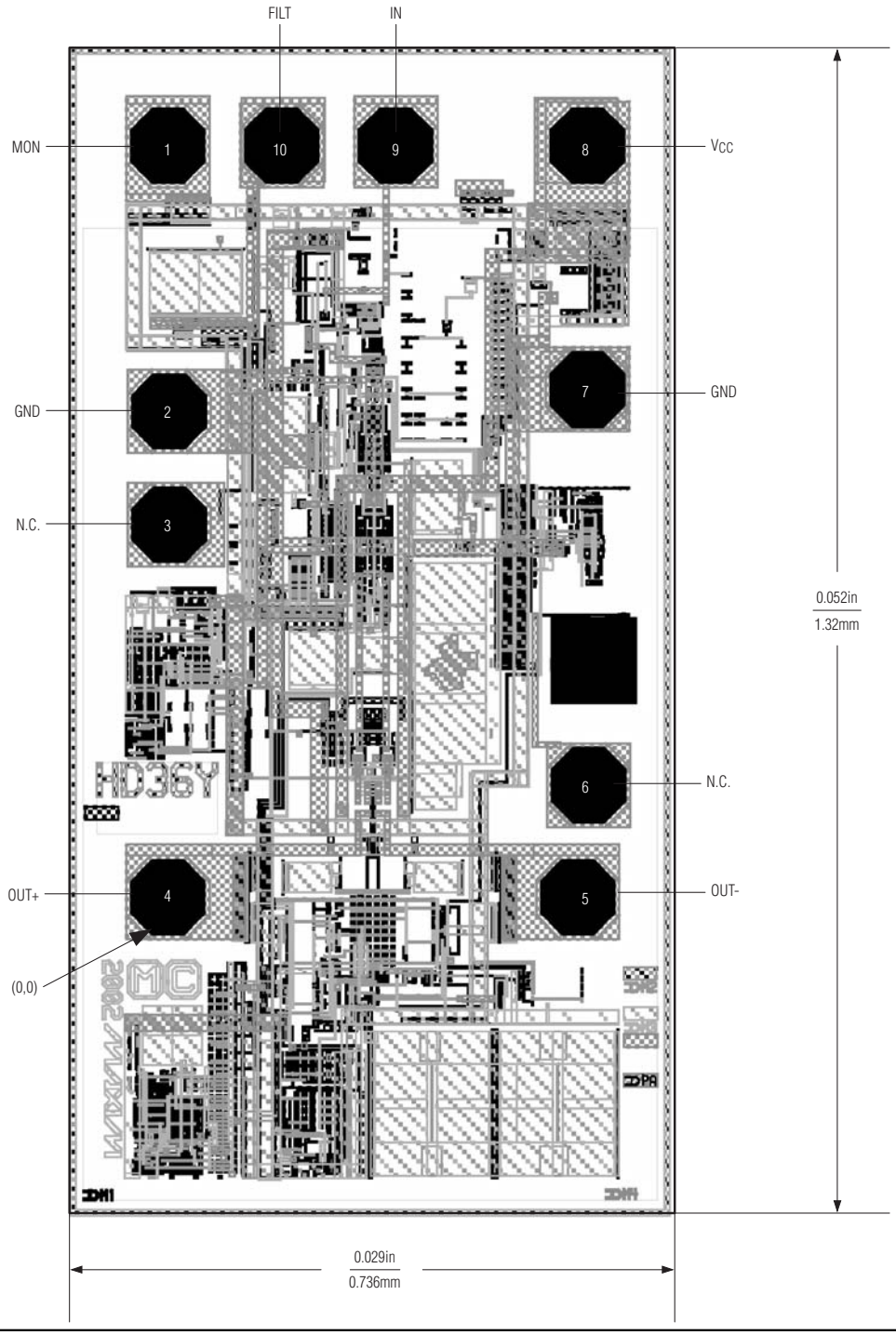

Chip Topographies (continued)

Topography for MAX3658B

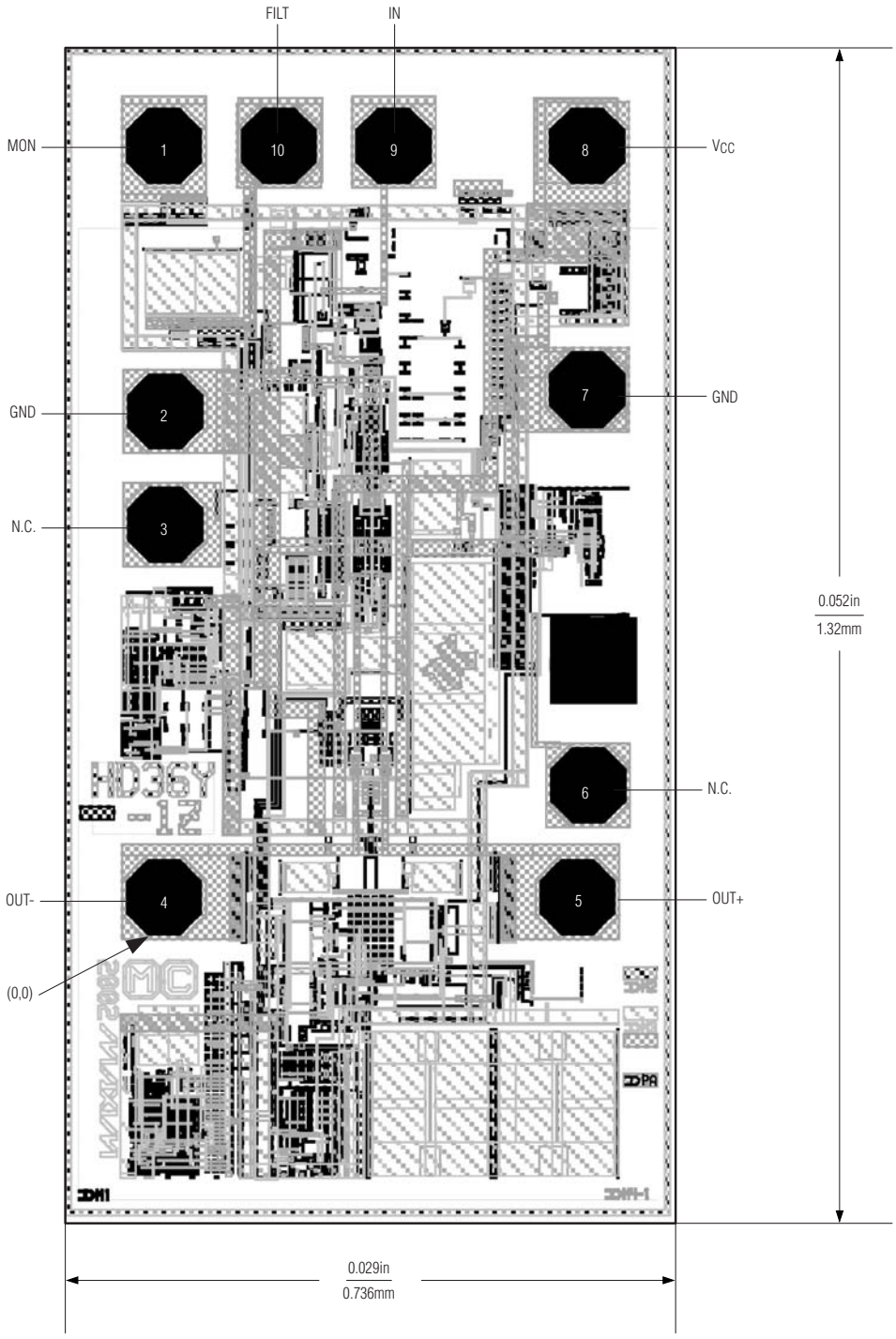

622Mbps, Low-Noise, High-Gain Transimpedance Preamplifier

Package Information

(The package drawing(s) in this data sheet may not reflect the most current specifications. For the latest package outline information, go to **www.maxim-ic.com/packages**.)

6, 8, &10L, DFN THIN.EPS

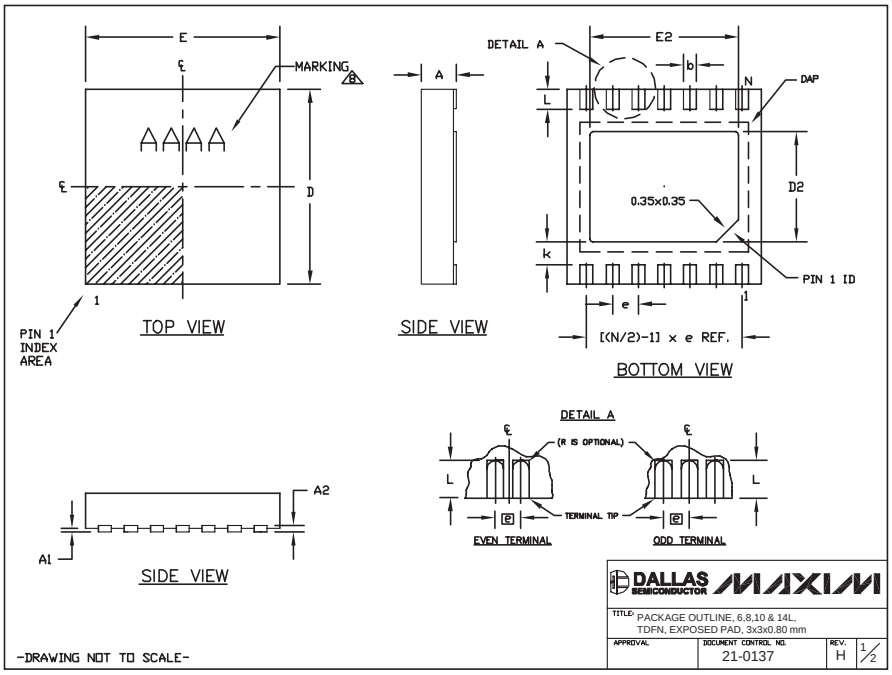

COMMON DIMENSIONS		
SYMBOL	MIN.	MAX.
A	0.70	0.80
D	2.90	3.10
E	2.90	3.10
A1	0.00	0.05
L	0.20	0.40
k	0.25 MIN.	
A2	0.20 REF.	

PACKAGE VARIATIONS							
PKG. CODE	N	D2	E2	e	JEDEC SPEC	b	[(N/2)-1] x e
T633-1	6	1.50±0.10	2.30±0.10	0.95 BSC	MO229 / WEEA	0.40±0.05	1.90 REF
T633-2	6	1.50±0.10	2.30±0.10	0.95 BSC	MO229 / WEEA	0.40±0.05	1.90 REF
T833-1	8	1.50±0.10	2.30±0.10	0.65 BSC	MO229 / WEEC	0.30±0.05	1.95 REF
T833-2	8	1.50±0.10	2.30±0.10	0.65 BSC	MO229 / WEEC	0.30±0.05	1.95 REF
T833-3	8	1.50±0.10	2.30±0.10	0.65 BSC	MO229 / WEEC	0.30±0.05	1.95 REF
T1033-1	10	1.50±0.10	2.30±0.10	0.50 BSC	MO229 / WEED-3	0.25±0.05	2.00 REF
T1033-2	10	1.50±0.10	2.30±0.10	0.50 BSC	MO229 / WEED-3	0.25±0.05	2.00 REF
T1433-1	14	1.70±0.10	2.30±0.10	0.40 BSC	- - - -	0.20±0.05	2.40 REF
T1433-2	14	1.70±0.10	2.30±0.10	0.40 BSC	- - - -	0.20±0.05	2.40 REF

NOTES:
1. ALL DIMENSIONS ARE IN mm. ANGLES IN DEGREES.
2. COPLANARITY SHALL NOT EXCEED 0.08 mm.
3. WARPAGE SHALL NOT EXCEED 0.10 mm.
4. PACKAGE LENGTH/PACKAGE WIDTH ARE CONSIDERED AS SPECIAL CHARACTERISTIC(S).
5. DRAWING CONFORMS TO JEDEC MO229, EXCEPT DIMENSIONS "D2" AND "E2", AND T1433-1 & T1433-2.
6. "N" IS THE TOTAL NUMBER OF LEADS.
7. NUMBER OF LEADS SHOWN ARE FOR REFERENCE ONLY.
8. MARKING IS FOR PACKAGE ORIENTATION REFERENCE ONLY.

-DRAWING NOT TO SCALE-

DALLAS SEMICONDUCTOR MAXIM
TITLE: PACKAGE OUTLINE, 6,8,10 & 14L, TDFN, EXPOSED PAD, 3x3x0.80 mm
APPROVAL
DOCUMENT CONTROL NO. 21-0137
REV. H
2/2

Revision History

Rev 0;	10/03:	Initial data sheet release.
Rev 1;	5/04:	Added line to EC table regarding Optical Overload at 155MHz (page 3).
Rev 2;	11/05:	Changed TO layout in Figure 3 (page 8).
Rev 3;	2/07:	Added lead-free package to Ordering Information table (page 1).

Maxim cannot assume responsibility for use of any circuitry other than circuitry entirely embodied in a Maxim product. No circuit patent licenses are implied. Maxim reserves the right to change the circuitry and specifications without notice at any time.

© 2007 Maxim Integrated Products MAXIM is a registered trademark of Maxim Integrated Products, Inc.