19-1570; Rev 4; 1/05

EVALUATION KIT AVAILABLE

+3.3V, 2.5Gbps SDH/SONET Laser Driver with Current Monitors and APC

General Description

The MAX3869 is a complete, single +3.3V laser driver for SDH/SONET applications up to 2.5Gbps. The device accepts differential PECL data and clock inputs and provides bias and modulation currents for driving a laser. A synchronizing input latch can be used (if a clock signal is available) to reduce jitter.

An automatic power control (APC) feedback loop is incorporated to maintain a constant average optical power over temperature and lifetime. The wide modulation current range of 5mA to 60mA and bias current of 1mA to 100mA are easy to program, making this product ideal for use in various SDH/SONET applications.

The MAX3869 also provides enable control, two current monitors that are directly proportional to the laser bias and modulation currents, and a failure-monitor output to indicate when the APC loop is unable to maintain the average optical power. The MAX3869 is available in 32-pin TQFP and small 32-pin QFN packages as well as dice.

Applications

SONET/SDH Transmission Systems

Add/Drop Multiplexers

Digital Cross-Connects

Section Regenerators

2.5Gbps Optical Transmitters

Pin Configuration appears at end of data sheet.

Features

- **Single +3.3V or +5V Power Supply**
- **64mA Supply Current at +3.3V**
- **Programmable Bias Current from 1mA to 100mA**
- **Programmable Modulation Current from 5mA to 60mA**
- **Bias Current and Modulation Current Monitors**
- **87ps Rise/Fall Time**
- **Automatic Average Power Control with Failure Monitor**
- **Complies with ANSI, ITU, and Bellcore SDH/SONET Specifications**
- **Enable Control**

Ordering Information

PART	TEMP RANGE	PIN-PACKAGE
MAX3869EHJ	-40°C to +85°C	32 TQFP-EP*
MAX3869EHJ+	-40°C to +85°C	32 TQFP-EP*
MAX3869EGJ	-40°C to +85°C	32 QFN**
MAX3869E/D	-40°C to +85°C	Dice***

**Exposed pad.*

***Package Code: G3255-1*

****Dice are designed to operate over this range, but are tested and guaranteed at T_A = +25°C only. Contact factory for availability.*

+Denotes lead-free package.

Typical Application Circuit

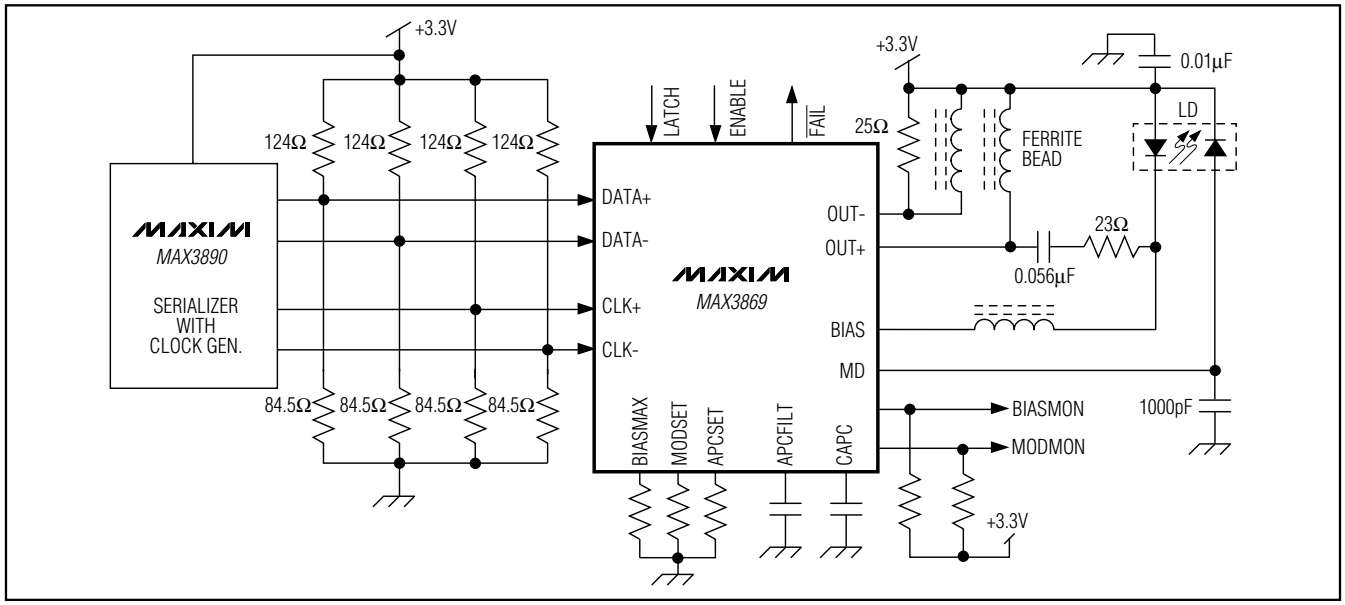

For pricing, delivery, and ordering information, please contact Maxim/Dallas Direct! at 1-888-629-4642, or visit Maxim's website at www.maxim-ic.com.

+3.3V, 2.5Gbps SDH/SONET Laser Driver with Current Monitors and APC

ABSOLUTE MAXIMUM RATINGS

Supply Voltage, V_{CC} ..... -0.5V to +7.0V
Current into BIAS .....-20mA to +150mA
Current into OUT+, OUT- .....-20mA to +100mA
Current into MD .....-5mA to +5mA
Voltage at DATA+, DATA-, CLK+, CLK-, ENABLE, LATCH, $\overline{FAIL}$, BIASMON, MODMON .....-0.5V to (V_{CC} + 0.5V)
Voltage at APCFILT, CAPC, MODSET, BIASMAX, APCSET .....-0.5V to +3.0V
Voltage at OUT+, OUT- .....+1.5V to (V_{CC} + 1.5V)
Voltage at BIAS .....+1.0V to (V_{CC} + 0.5V)
Continuous Power Dissipation (T_A = +85°C)
32-Pin TQFP-EP (derate 22.2mW/°C above +85°C) ..1444mW
32-Pin QFN (derate 20.84mW/°C above +85°C) 1667mW
Storage Temperature Range .....-65°C to +165°C
Operating Junction Temperature Range .....-55°C to +150°C
Processing Temperature (die) .....+400°C
Lead Temperature (soldering, 10s) .....+300°C

Stresses beyond those listed under "Absolute Maximum Ratings" may cause permanent damage to the device. These are stress ratings only, and functional operation of the device at these or any other conditions beyond those indicated in the operational sections of the specifications is not implied. Exposure to absolute maximum rating conditions for extended periods may affect device reliability.

DC ELECTRICAL CHARACTERISTICS

(V_{CC} = +3.14V to +5.5V, T_A = -40°C to +85°C. Typical values are at V_{CC} = +3.3V, I_{MOD} = 30mA, I_{BIAS} = 60mA, T_A = +25°C, unless otherwise noted.) (Note 1)

PARAMETER	SYMBOL	CONDITIONS		MIN	TYP	MAX	UNITS
Supply Current	I_{CC}	(Note 2)			64	112	mA
Bias Current Range	I_{BIAS}	(Note 3)		1		100	mA
Bias Off-Current	$I_{BIAS-OFF}$	ENABLE = low (Note 4)				100	µA
Bias-Current Stability		APC open loop	I_{BIAS} = 100mA		230		ppm/°C
			I_{BIAS} = 1mA		900		
Bias-Current Absolute Accuracy	(Note 5)	APC open loop		-15		15	%
Differential Input Voltage	V_{ID}	Figure 1		200		1600	mVp-p
Common-Mode Input Voltage	V_{ICM}	PECL compatible		V_{CC} - 1.49	V_{CC} - 1.32	V_{CC} - V_{ID}/4	V
Clock and Data Input Current	I_{IN}			-1		10	µA
TTL Input High Voltage		ENABLE, LATCH		2.0			V
TTL Input Low Voltage		ENABLE, LATCH				0.8	V
TTL Output High Voltage $\overline{FAIL}$		Sourcing 50µA		2.4	V_{CC} - 0.3	V_{CC}	V
TTL Output Low Voltage $\overline{FAIL}$		Sinking 100µA		0.1		0.44	V
Monitor-Diode Reverse Bias Voltage				1.5			V
Monitor-Diode DC Current Range	I_{MD}			18		1000	µA
Monitor-Diode Bias Setpoint Stability		(Note 6)	I_{MD} = 1mA	-480	50	480	ppm/°C
			I_{MD} = 18µA		90		
Monitor-Diode Bias Absolute Accuracy		(Note 5)		-15		15	%
BIASMON to I_{BIAS} Gain	A_{BIAS}	$I_{BIAS}/I_{BIASMON}$			37		A/A
MODMON to I_{MOD} Gain	A_{MOD}	I_{MOD}/I_{MODMON}			29		A/A

AC ELECTRICAL CHARACTERISTICS

(V_{CC} = +3.14V to +5.5V, load as shown in Figure 2, T_A = -40°C to +85°C. Typical values are at V_{CC} = +3.3V, I_{MOD} = 30mA, T_A = +25°C.) (Note 7)

PARAMETER	SYMBOL	CONDITIONS		MIN	TYP	MAX	UNITS
Input Latch Setup Time	t_{SU}	LATCH = high, Figure 3		100			ps
Input Latch Hold Time	t_H	LATCH = high, Figure 3		100			ps
Modulation-Current Range	I_{MOD}			5		60	mA
Modulation-Off Current	$I_{MOD-OFF}$	ENABLE = low (Note 4)				200	µA
Modulation-Current Stability		I_{MOD} = 60mA		-480	-8	480	ppm/°C
		I_{MOD} = 5mA			300		
Modulation-Current Absolute Accuracy		(Note 5)		-15		15	%
Output Rise-Time	t_R	20% to 80% (Note 8)	MAX3869EHJ		78		ps
			MAX3869E/D		69		
Output Fall- Time	t_F	20% to 80% (Note 8)	MAX3869EHJ		87	(Note 10)	ps
			MAX3869E/D		79		
Output Aberrations		(Note 8)			±15		%
Enable and Start-Up Delay					250		ns
Maximum Consecutive Identical Digits				80			bits
Pulse-Width Distortion	PWD	(Notes 8, 9)			14	50	ps
Jitter Generation		Jitter BW = 12kHz to 20MHz, 0-1 pattern			7	20	ps_{p-p}

Note 1: Dice are tested at T_A = +25°C only.
Note 2: Tested at R_{MODSET} = 2.49kΩ, $R_{BIASMAX}$ = 1.69kΩ, excluding I_{BIAS} and I_{MOD}.
Note 3: Voltage on BIAS pin is (V_{CC} - 1.6V).
Note 4: Both the bias and modulation currents will be switched off if any of the current set pins are grounded.
Note 5: Accuracy refers to part-to-part variation.
Note 6: Assuming that the laser to monitor-diode transfer function does not change with temperature. Guaranteed by design and characterization.
Note 7: AC characteristics are guaranteed by design and characterization.
Note 8: Measured with 622Mbps 0-1 pattern, LATCH = high.
Note 9: PWD = (wider pulse - narrower pulse) / 2.
Note 10: See *Typical Operating Characteristics* for worst-case distribution.

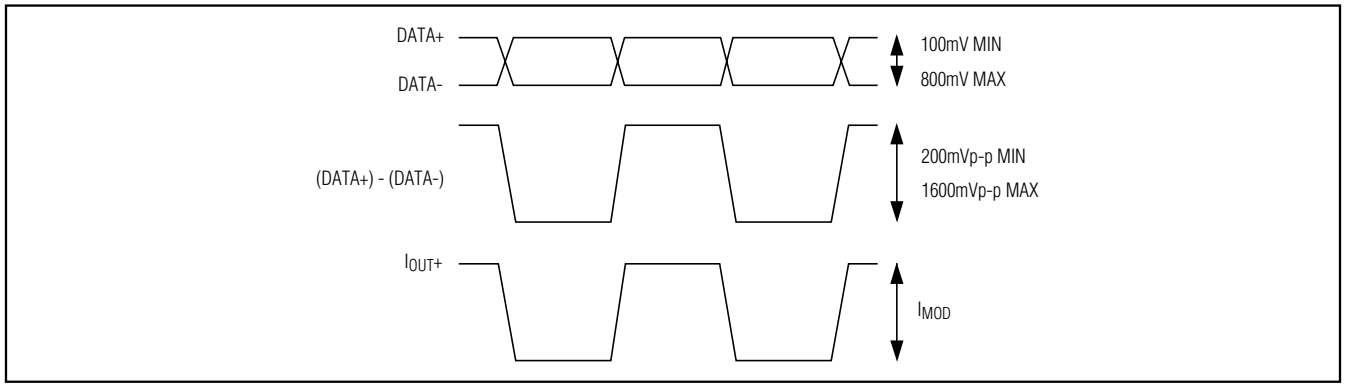

Figure 1. Required Input Signal and Output Polarity

+3.3V, 2.5Gbps SDH/SONET Laser Driver with Current Monitors and APC

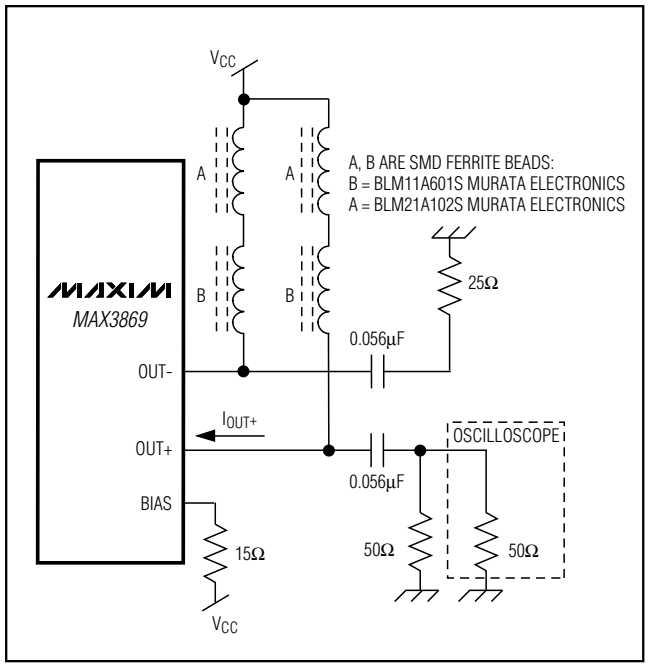

Figure 2. Output Termination for Characterization

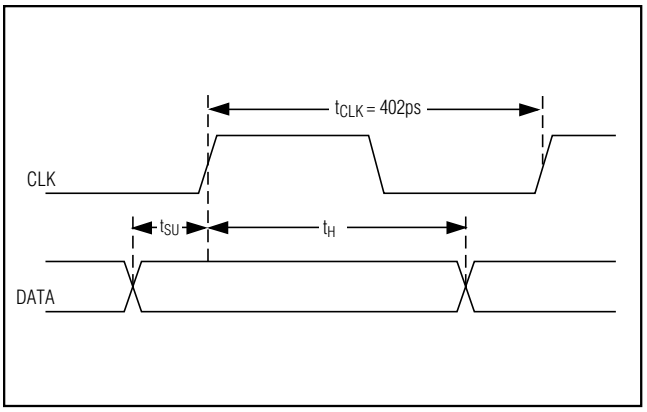

Figure 3. Setup/Hold Time Definition

Typical Operating Characteristics

(V_{CC} = +3.3V, load as shown in Figure 2, T_A = +25°C, unless otherwise noted.)

EYE DIAGRAM (2.488Gbps, 1300nm FP LASER, 1.87GHz FILTER, 32 TQFP-EP)

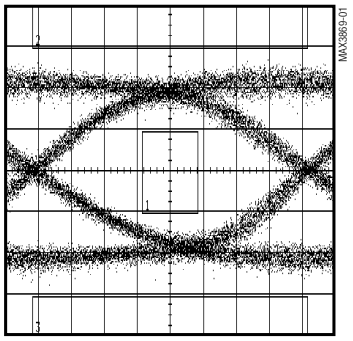

MITSUBISHI ML725C8F LASER DIODE

TYPICAL DISTRIBUTION OF FALL TIME

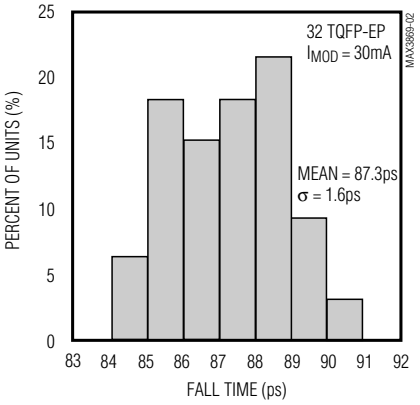

DISTRIBUTION OF FALL TIME (WORST-CASE CONDITIONS)

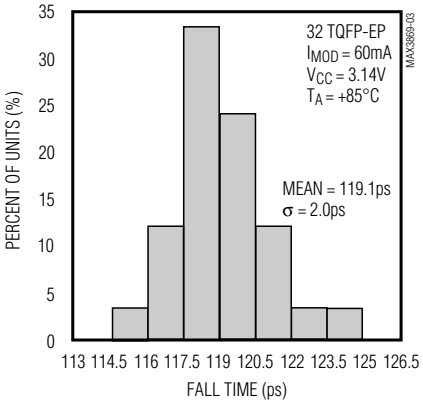

+3.3V, 2.5Gbps SDH/SONET Laser Driver with Current Monitors and APC

Typical Operating Characteristics (continued)

(V_{CC} = +3.3V, load as shown in Figure 2, T_A = +25°C, unless otherwise noted.)

ELECTRICAL EYE DIAGRAM (I_{MOD} = 30mA, 2^{13}-1 +80 CID, 32 TQFP-EP)

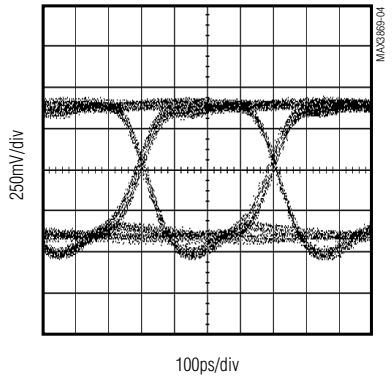

ELECTRICAL EYE DIAGRAM (I_{MOD} = 60mA, 2^{13}-1 +80 CID, 32 TQFP-EP)

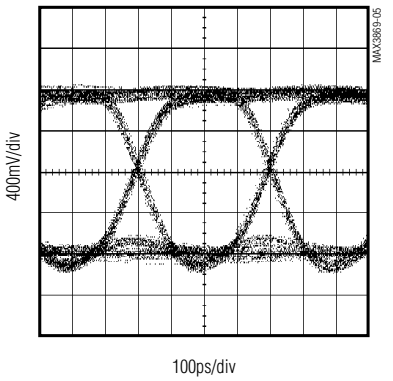

RANDOM JITTER vs. I_{MOD}

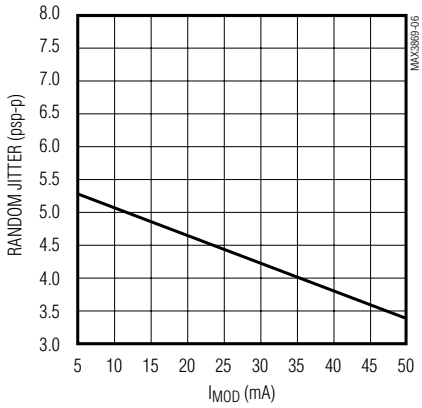

$I_{BIASMAX}$ vs. $R_{BIASMAX}$

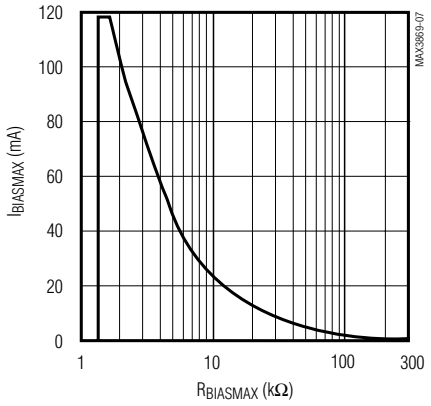

I_{MOD} vs. R_{MODSET}

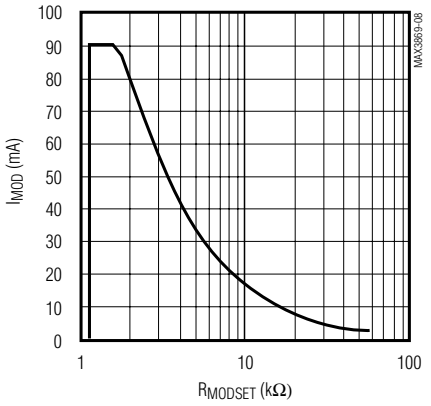

I_{MD} vs. R_{APCSET}

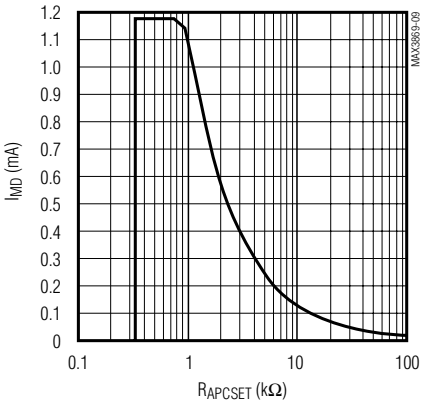

SUPPLY CURRENT vs. TEMPERATURE (EXCLUDE I_{BIAS}, I_{MOD}, 25Ω LOAD)

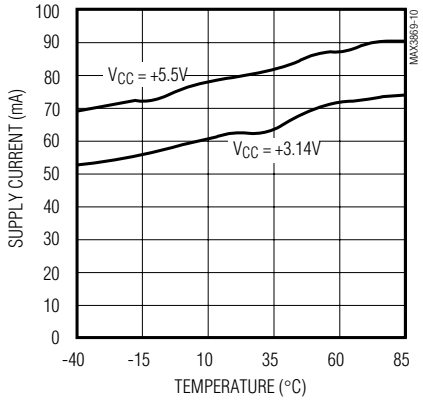

BIAS-CURRENT MONITOR GAIN vs. TEMPERATURE

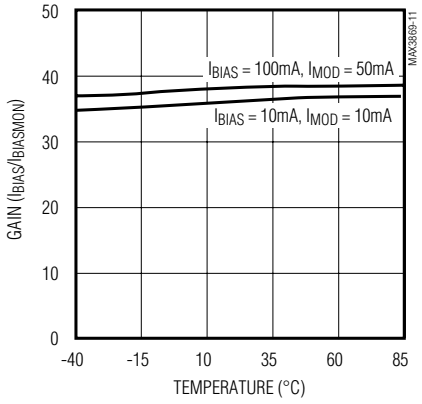

+3.3V, 2.5Gbps SDH/SONET Laser Driver with Current Monitors and APC

Typical Operating Characteristics (continued)

(V_{CC} = +3.3V, load as shown in Figure 2, T_A = +25°C, unless otherwise noted.)

MODULATION-CURRENT MONITOR GAIN vs. TEMPERATURE

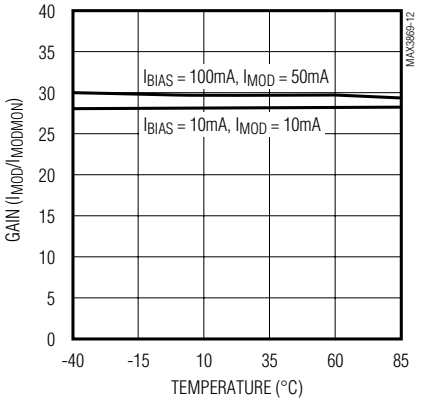

PULSE-WIDTH DISTORTION vs. I_{MOD}

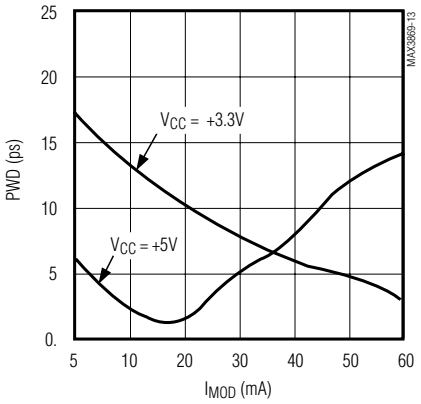

Pin Description

PIN	NAME	FUNCTION
1, 4, 7	$V_{CC}1$	Power Supply for Digital Circuits
2	DATA+	Noninverting PECL Input
3	DATA-	Inverting PECL Input
5	CLK+	Positive PECL Clock Input. Connect to V_{CC} if latch function is not used.
6	CLK-	Negative PECL Clock Input. Leave unconnected if latch function is not used.
8	LATCH	TTL/CMOS Latch Input. High for latched data, low for direct data. Internal 100kΩ pull-up to V_{CC}.
9	ENABLE	TTL/CMOS Enable Input. High for normal operation, low to disable laser bias and modulation current. Internal 100kΩ pull-up to V_{CC}.
10, 15	GND1	Ground for Digital Circuits
11	BIASMON	Bias Current Monitor. Sink current source that is proportional to the laser bias current.
12	MODMON	Modulation Current Monitor. Sink current source that is proportional to the laser modulation current.
13	$\overline{FAIL}$	TTL/CMOS Failure Output. Indicates APC failure when low.
14	APCFILT	Connect a capacitor ($C_{APCFILT}$ = 0.1µF) from this pad to ground to filter the APC noise.
16, 18, 21	$V_{CC}4$	Power Supply for Output Circuitry
17	BIAS	Laser Bias Current Output
19	OUT+	Positive Modulation-Current Output. I_{MOD} flows through this pad when input data is high.

Pin Description (continued)

PIN	NAME	FUNCTION
20	OUT-	Negative Modulation-Current Output. I_{MOD} flows through this pad when input data is low.
22	GND4	Ground for Output Circuitry
23	GND3	Ground for APC
24	MD	Monitor Diode Input. Connect this pad to a monitor photodiode anode. A capacitor to ground is required to filter high-speed AC monitor photocurrent.
25	V_{CC3}	Power Supply for APC
26	CAPC	A capacitor connected from this pad to ground controls the dominant pole of the APC feedback loop (C_{APC} = 0.1µF).
27	GND2	Ground for Internal Reference
28	N.C.	No Connection. Leave unconnected.
29	APCSET	A resistor connected from this pad to ground sets the desired average optical power. Connect 100kΩ from this pad to ground if APC is not used.
30	MODSET	A resistor connected from this pad to ground sets the desired modulation current.
31	BIASMAX	A resistor connected from this pad to ground sets the maximum bias current. The APC function can subtract from this maximum value, but cannot add to it.
32	V_{CC2}	Power Supply for Internal Reference

Detailed Description

The MAX3869 laser driver consists of two main parts: a high-speed modulation driver and a laser-biasing block with automatic power control (APC). The circuit design is optimized for both high-speed and low-voltage (+3.3V) operation. To minimize the pattern-dependent jitter of the input signal at speeds as high as 2.5Gbps, the device accepts a differential PECL clock signal for data retiming. When LATCH is high, the input data is synchronized by the clock signal. When LATCH is low, the input data is directly applied to the output stage.

The output stage is composed of a high-speed differential pair and a programmable modulation current source. Since the modulation output drives a maximum current of 60mA into the laser with an edge speed of 100ps, large transient voltage spikes can be generated (due to the parasitic inductance). These transients and the laser forward voltage leave insufficient headroom for the proper operation of the laser driver if the modulation output is DC-coupled to the laser diode. To solve this problem, the MAX3869's modulation output is designed to be AC-coupled to the cathode of a laser diode. An external pull-up inductor is necessary to DC-bias the modulation output at V_{CC}. Such a configuration isolates laser forward voltage from the output circuitry and allows the output at OUT+ to swing above and below the supply voltage V_{CC}. A simplified functional diagram is shown in Figure 4.

The MAX3869 modulation output is optimized for driving a 25Ω load; the minimum required voltage at OUT+ is 2.0V. Modulation current swings of 80mA are possible, but due to minimum power-supply and jitter requirements at 2.5Gbps, the specified maximum modulation current is limited to 60mA. To interface with the laser diode, a damping resistor (R_D) is required for impedance matching. An RC shunt network may also be necessary to compensate for the laser-diode parasitic inductance, thereby improving the optical output aberrations and duty-cycle distortion.

At the data rate of 2.5Gbps, any capacitive load at the cathode of a laser diode will degrade the optical output performance. Since the BIAS output is directly connected to the laser cathode, minimize the parasitic capacitance associated with this pin by using an inductor to isolate the BIAS pin from the laser cathode.

Automatic Power Control

To maintain constant average optical power, the MAX3869 incorporates an APC loop to compensate for the changes in laser threshold current over temperature and lifetime. A back-facet photodiode mounted in the

+3.3V, 2.5Gbps SDH/SONET Laser Driver with Current Monitors and APC

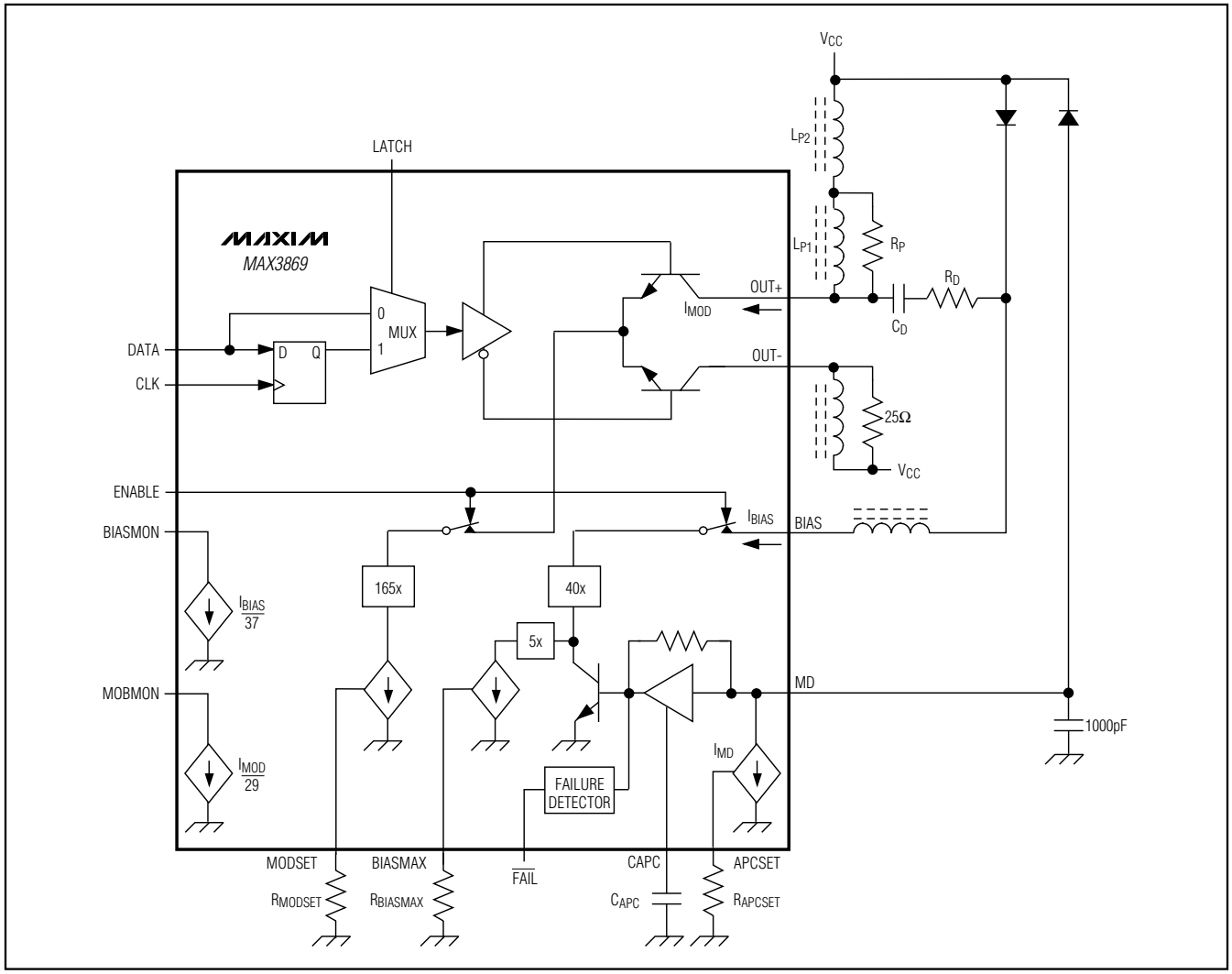

Figure 4. Functional Diagram

laser package is used to convert the optical power into a photocurrent. The APC loop adjusts the laser bias current so that the monitor current is matched to a reference current set by R_{APCSET}. The time constant of the APC loop is determined by an external capacitor (C_{APC}). To eliminate the pattern-dependent jitter associated with the APC loop-time constant, and to guarantee loop stability, the recommended value for C_{APC} is 0.1µF.

When the APC loop is functioning, the maximum allowable bias current is set by an external resistor, $R_{BIASMAX}$. An APC failure flag ($\overline{FAIL}$) is set low when the bias current can no longer be adjusted to achieve the desired average optical power. To filter out the APC loop noise, use an external capacitor at APCFILT with a recommended value of 0.1µF.

APC closed-loop operation requires the user to set three currents with external resistors connected between ground and BIASMAX, MODSET, and APCSET. Detailed guidelines for these resistor settings are described in the *Design Procedure* section.

Open-Loop Operation

If necessary, the MAX3869 is fully operational without APC. In this case, the laser current is directly set by two external resistors connected from ground to BIASMAX and MODSET. See the *Design Procedure* section for more details on open-loop operation.

Optional Data Input Latch

To minimize input data pattern-dependent jitter, the differential clock signal should be connected to the data input latch, which is selected by an external LATCH control. If LATCH is high, the input data is retimed by the rising edge of CLK+. If LATCH is low, the input data is directly connected to the output stage. When this latch function is not used, connect CLK+ to V_{CC} and leave CLK- unconnected.

Enable Control

The MAX3869 incorporates a laser driver enable function. When ENABLE is low, both the bias and modulation currents are off. The typical laser enable time is 250ns, and the typical disable time is 25ns.

Current Monitors

The MAX3869 features bias- and modulation-current monitor outputs. The BIASMON output sinks a current equal to 1/37 of the laser bias current (I_{BIAS} / 37). The MODMON output sinks a current equal to 1/29 of the laser modulation current (I_{MOD} / 29). BIASMON and MODMON should be connected through a pull-up resistor to V_{CC}. Choose a pull-up resistor value that ensures a voltage at BIASMON greater than V_{CC} - 1.6V and a voltage at MODMON greater than V_{CC} - 1.0V.

Slow-Start

For laser safety reasons, the MAX3869 incorporates a slow-start circuit that provides a delay of 250ns for enabling a laser diode.

APC Failure Monitor

The MAX3869 provides an APC failure monitor (TTL/CMOS) to indicate an APC loop tracking failure. $\overline{FAIL}$ is set low when the APC loop can no longer adjust the bias current to maintain the desired monitor current.

Short-Circuit Protection

The MAX3869 provides short-circuit protection for the modulation, bias, and monitor current sources. If either BIASMAX, MODSET, or APCSET is shorted to ground, the bias and modulation output will be turned off.

Design Procedure

When designing a laser transmitter, the optical output is usually expressed in terms of average power and extinction ratio. Table 1 gives the relationships that are helpful in converting between the optical average power and the modulation current. These relationships are valid if the mark density and duty cycle of the optical waveform are 50%.

Programming the Modulation Current

For a given laser power P_{AVG}, slope efficiency (η), and extinction ration (r_e), the modulation current can be calculated using Table 1. See the I_{MOD} vs. R_{MODSET} graph in the *Typical Operating Characteristics* and select the value of R_{MODSET} that corresponds to the required current at +25°C.

Programming the Bias Current

When using the MAX3869 in open-loop operation, the bias current is determined by the $R_{BIASMAX}$ resistor. To select this resistor, determine the required bias current at +25°C. See the $I_{BIASMAX}$ vs. $R_{BIASMAX}$ graph in the *Typical Operating Characteristics* and select the value of $R_{BIASMAX}$ that corresponds to the required current at +25°C.

When using the MAX3869 in closed-loop operation, the $R_{BIASMAX}$ resistor sets the maximum bias current available to the laser diode over temperature and life. The APC loop can subtract from this maximum value but cannot add to it. See the $I_{BIASMAX}$ vs. $R_{BIASMAX}$ graph in the *Typical Operating Characteristics* and select the value of $R_{BIASMAX}$ that corresponds to the end-of-life bias current at +85°C.

Programming the APC Loop

When the MAX3869's APC feature is used, program the average optical power by adjusting the APCSET resistor. To select this resistor, determine the desired monitor current to be maintained over temperature and life. See the I_{MD} vs. R_{APCSET} graph in the *Typical Operating Characteristics* and select the value of R_{APCSET} that corresponds to the required current.

Interfacing with Laser Diodes

To minimize optical output aberrations caused by signal reflections at the electrical interface to the laser diode, a series damping resistor (R_D) is required (Figure 4). Additionally, the MAX3869 outputs are optimized for a 25Ω load. Therefore, the series combination of R_D and R_L (where R_L represents the laser-diode resistance)

Table 1. Optical Power Definition

PARAMETER	SYMBOL	RELATION
Average Power	P_{AVG}	$P_{AVG} = (P_0 + P_1) / 2$
Extinction Ratio	r_e	$r_e = P_1 / P_0$
Optical Power High	P_1	$P_1 = 2P_{AVG} \cdot r_e / (r_e + 1)$
Optical Power Low	P_0	$P_0 = 2P_{AVG} / (r_e + 1)$
Optical Amplitude	Pp-p	Pp-p $= 2P_{AVG} (r_e - 1) / (r_e + 1)$
Laser Slope Efficiency	η	$\eta = Pp\text{-}p / I_{MOD}$
Modulation Current	I_{MOD}	$I_{MOD} = Pp\text{-}p / \eta$

+3.3V, 2.5Gbps SDH/SONET Laser Driver with Current Monitors and APC

should equal 25Ω. Typical values for R_D are 18Ω to 23Ω. For best performance, a bypass capacitor (0.01µF typical) should be placed as close as possible to the anode of the laser diode. Depending on the exact characteristics of the laser diode and PC board layout, a resistor (R_P) of 20Ω to 70Ω in parallel with pull-up inductor L_{P1} can be useful in damping overshoot and ringing in the optical output.

In some applications (depending on laser-diode parasitic inductance characteristics), an RC shunt network between the laser cathode and ground will help minimize optical output aberrations. Starting values for most coaxial lasers are R = 75Ω in series with C = 3.3pF. These values should be experimentally adjusted until the optical output waveform is optimized.

Pattern-Dependent Jitter

When transmitting NRZ data with long strings of consecutive identical digits (CIDs), LF droop can occur and contribute to pattern-dependent jitter (PDJ). To minimize this PDJ, three external components must be properly chosen: capacitor C_{APC}, which dominates the APC loop time constant; pull-up inductor L_P; and AC-coupling capacitor C_D.

To filter out noise effects and guarantee loop stability, the recommended value for C_{APC} is 0.1µF. This results in an APC loop bandwidth of 10kHz or a time constant of 16µs. As a result, the PDJ associated with an APC loop time constant can be ignored.

The time constant associated with the output pull-up inductor ($L_P \approx L_{P2}$), and the AC-coupling capacitor (C_D) will also impact the PDJ. For such a second-order network, the PDJ due to the low frequency cutoff will be dominated by L_P. For a data rate of 2.5Gbps, the recommended value for C_D is 0.056µF. During the maximum CID period, it is recommended to limit the peak voltage droop to less than 12% of the average (6% of the amplitude). The time constant can be estimated by:

$$12\% = 1 - e^{-t/\tau_{LP}}$$

$$\tau_{LP} = 7.8t$$

If $\tau_{LP} = L_P / 25\Omega$, and t = 100UI = 40ns, then L_P = 7.8µH. To reduce the physical size of this element (L_P), use of SMD ferrite beads is recommended (Figure 2).

Input Termination Requirement

The MAX3869 data and clock inputs are PECL compatible. However, it is not necessary to drive the MAX3869 with a standard PECL signal. As long as the specified common-mode voltage and the differential voltage swings are met, the MAX3869 will operate properly.

Calculating Power Consumption

The junction temperature of the MAX3869 dice must be kept below +150°C at all times. The total power dissipation of the MAX3869 can be estimated by the following:

$$P = V_{CC} \times I_{CC} + (V_{CC} - V_f) \times I_{BIAS} + I_{MOD} (V_{CC} - 25\Omega \times I_{MOD} / 2)$$

where I_{BIAS} is the maximum bias current set by $R_{BIAS-MAX}$, I_{MOD} is the modulation current, and V_f is the typical laser forward voltage.

$$\text{Junction Temperature} = P(W) \times 45\ (°C/W)$$

Applications Information

An example of how to set up the MAX3869 follows.

Select Laser

A communication-grade laser should be selected for 2.488Gbps applications. Assume the laser output average power is P_{AVG} = 0dBm, minimum extinction ratio is r_e = 6.6 (8.2dB), the operating temperature is -40°C to +85°C, and the laser diode has the following characteristics:

Wavelength:	λ = 1.3µm
Threshold Current:	I_{TH} = 22mA at +25°C
Threshold Temperature Coefficient:	β_{TH} = 1.3%/°C
Laser to Monitor Transfer:	ρ_{MON} = 0.2A/W
Laser Slope Efficiency:	η = 0.05mW/mA at +25°C

Determine R_{APCSET}

The desired monitor diode current is estimated by $I_{MD} = P_{AVG} \cdot \rho_{MON}$ = 200µA. The I_{MD} vs. R_{APCSET} graph in the *Typical Operating Characteristics* shows that R_{APCSET} should be 6.0kΩ.

Determine R_{MODSET}

To achieve a minimum extinction ratio (r_e) of 6.6 over temperature and lifetime, calculate the required extinction ratio at +25°C. Assuming r_e = 20, the peak-to-peak optical power P_{p-p} = 1.81mW, according to Table 1. The required modulation current is 1.81(mW) / 0.05(mW/mA) = 36.2mA. The I_{MOD} vs. R_{MODSET} graph in the *Typical Operating Characteristics* shows that R_{MODSET} should be 4.8kΩ.

Determine $R_{BIASMAX}$

Calculate the maximum threshold current ($I_{TH(MAX)}$) at T_A = +85°C and end of life. Assuming $I_{TH(MAX)}$ = 50mA, the maximum bias current should be:

$$I_{BIASMAX} = I_{TH(MAX)} + I_{MOD}/2$$

In this example, $I_{BIASMAX}$ = 68.1mA. The $I_{BIASMAX}$ vs. $R_{BIASMAX}$ graph in the *Typical Operating Characteristics* shows that $R_{BIASMAX}$ should be 3.2kΩ.

Modulation Currents Exceeding 60mA

With a +5V power supply, the headroom voltage for the MAX3869 is significantly improved. In this case, it is possible to achieve a modulation current of more than 60mA with AC-coupling, if the junction temperature is kept below 150°C. The MAX3869 can also be DC-coupled to a laser diode when operating with a +5V supply; the voltage at OUT+ should be ≥2.0V for proper operation.

Wire Bonding Die

For high current density and reliable operation, the MAX3869 uses gold metalization. Make connections to the die with gold wire only, using ball-bonding techniques. Wedge bonding is not recommended. Die-pad size is 4 mils (100µm) square, and die thickness is 12 mils (300µm) square.

Layout Considerations

To minimize inductance, keep the connections between the MAX3869 output pins and LD as close as possible. Optimize the laser diode performance by placing a bypass capacitor as close as possible to the laser anode. Use good high-frequency layout techniques and multilayer boards with uninterrupted ground planes to minimize EMI and crosstalk.

Laser Safety and IEC 825

Using the MAX3869 laser driver alone does not ensure that a transmitter design is compliant with IEC 825. The entire transmitter circuit and component selections must be considered. Each customer must determine the level of fault tolerance required by their application, recognizing that Maxim products are not designed or authorized for use as components in systems intended for surgical implant into the body, for applications intended to support or sustain life, or for any other application where the failure of a Maxim product could create a situation where personal injury or death may occur.

Chip Information

TRANSISTOR COUNT: 1561

SUBSTRATE CONNECTED TO GND

+3.3V, 2.5Gbps SDH/SONET Laser Driver with Current Monitors and APC

Pin Configurations

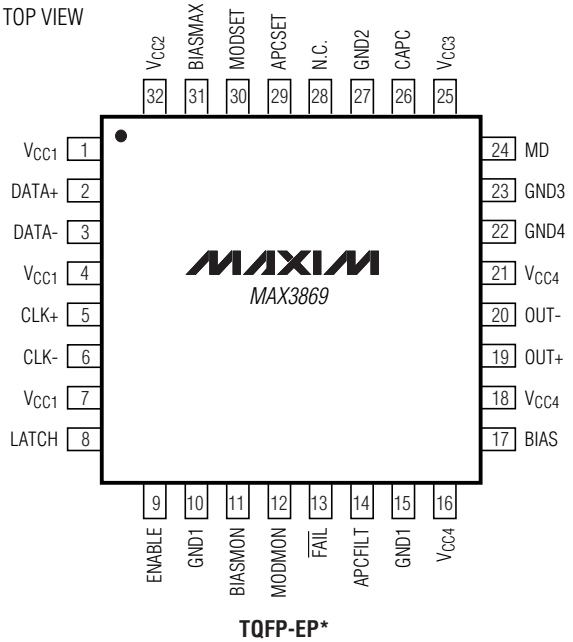

TQFP-EP*

*EXPOSED PAD IS CONNECTED TO GND.

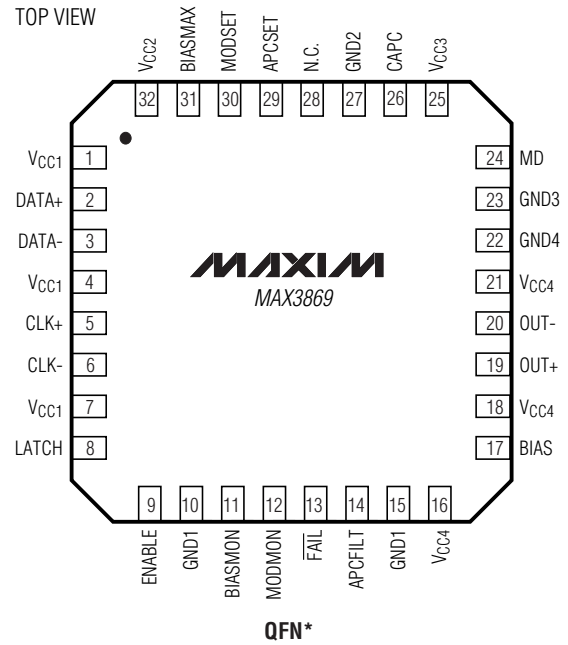

QFN*

*EXPOSED PAD IS CONNECTED TO GND.

Chip Topography

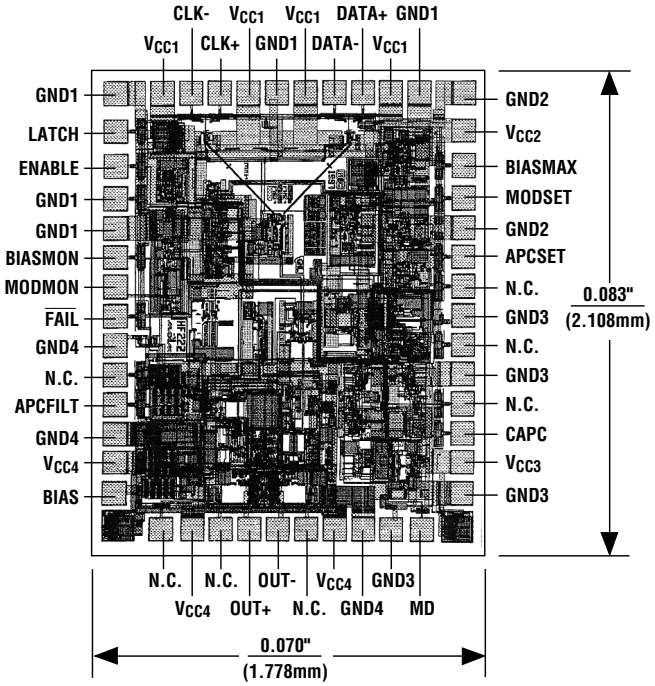

Package Information

(The package drawing(s) in this data sheet may not reflect the most current specifications. For the latest package outline information, go to **www.maxim-ic.com/packages**.)

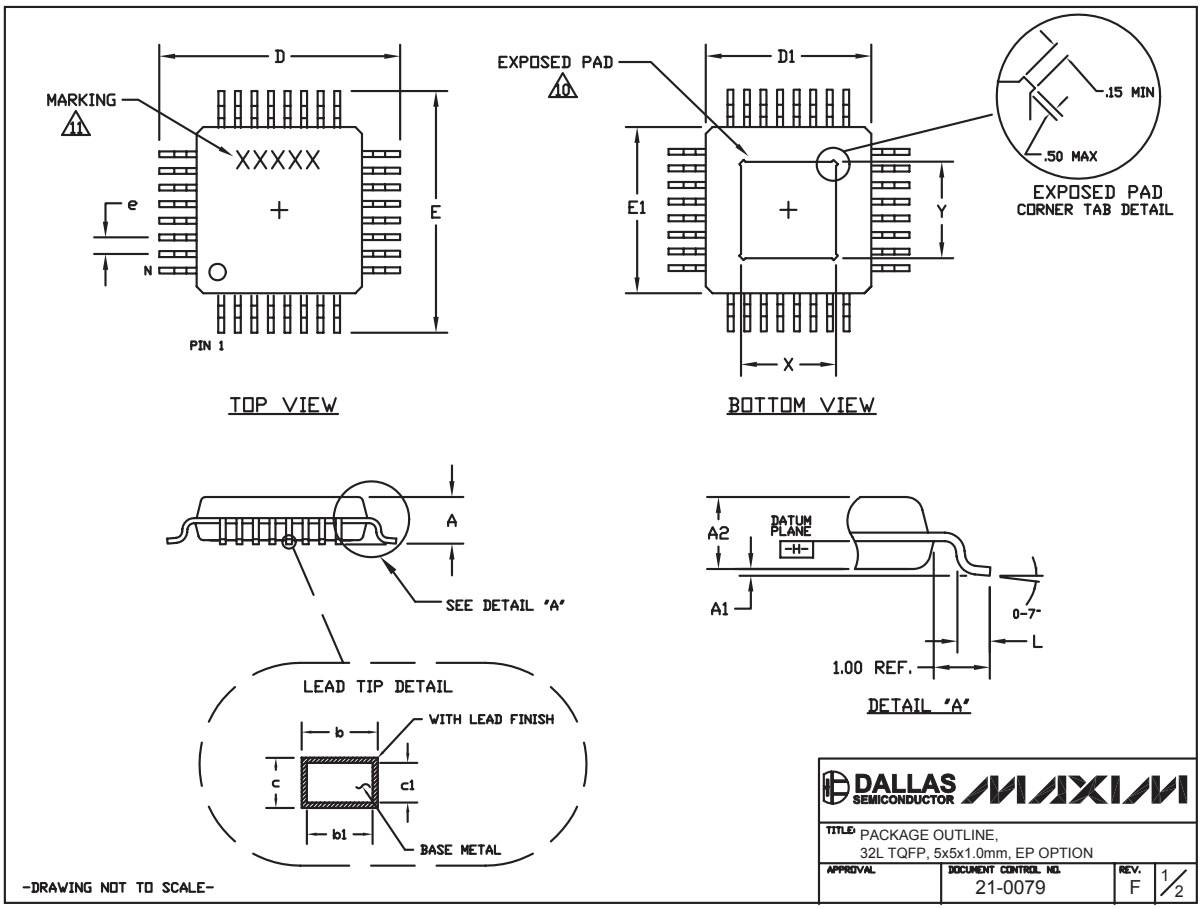

+3.3V, 2.5Gbps SDH/SONET Laser Driver with Current Monitors and APC

Package Information (continued)

(The package drawing(s) in this data sheet may not reflect the most current specifications. For the latest package outline information, go to **www.maxim-ic.com/packages**.)

NOTES:

1. ALL DIMENSIONING AND TOLERANCING CONFORM TO ANSI Y14.5-1982.
2. DATUM PLANE ⊟ IS LOCATED AT MOLD PARTING LINE AND COINCIDENT WITH LEAD, WHERE LEAD EXITS PLASTIC BODY AT BOTTOM OF PARTING LINE.
3. DIMENSIONS D1 AND E1 DO NOT INCLUDE MOLD PROTRUSION. ALLOWABLE MOLD PROTRUSION IS 0.25 MM ON D1 AND E1 DIMENSIONS.
4. THE TOP OF PACKAGE IS SMALLER THAN THE BOTTOM OF PACKAGE BY 0.15 MILLIMETERS.
5. DIMENSION b DOES NOT INCLUDE DAMBAR PROTRUSION. ALLOWABLE DAMBAR PROTRUSION SHALL BE 0.08 MM TOTAL IN EXCESS OF THE b DIMENSION AT MAXIMUM MATERIAL CONDITION.
6. ALL DIMENSIONS ARE IN MILLIMETERS.
7. THIS OUTLINE CONFORMS TO JEDEC PUBLICATION 95, REGISTRATION MS-026.
8. LEADS SHALL BE COPLANAR WITHIN .004 INCH.
9. EXPOSED DIE PAD SHALL BE COPLANAR WITH BOTTOM OF PACKAGE WITHIN 2 MILS (.05 MM).
10. DIMENSIONS X AND Y APPLY TO EXPOSED PAD (EP) VERSIONS ONLY. SEE INDIVIDUAL PRODUCT DATASHEET TO DETERMINE IF A PRODUCT USES EXPOSED PAD PACKAGE.
11. MARKING IS FOR PACKAGE ORIENTATION REFERENCE ONLY.

	COMMON DIMENSIONS	
	DIMENSIONS IN MILLIMETERS	
	JEDEC AAA-HD	
	5x5x1.0 MM	
	MIN.	MAX.
A		1.20
A_1	0.05	0.15
A_2	0.95	1.05
D	6.80	7.20
D_1	4.80	5.20
E	6.80	7.20
E_1	4.80	5.20
L	0.45	0.75
N	32	
e	0.50 BSC.	
b	0.17	0.27
b1	0.17	0.23
c	0.09	0.20
c1	0.09	0.16
X	2.70	3.30
Y	2.70	3.30

-DRAWING NOT TO SCALE-

DALLAS SEMICONDUCTOR MAXIM

TITLE: PACKAGE OUTLINE, 32L TQFP, 5x5x1.0mm, EP OPTION

APPROVAL	DOCUMENT CONTROL NO.	REV.	
	21-0079	F	2/2

Package Information (continued)

(The package drawing(s) in this data sheet may not reflect the most current specifications. For the latest package outline information, go to **www.maxim-ic.com/packages**.)

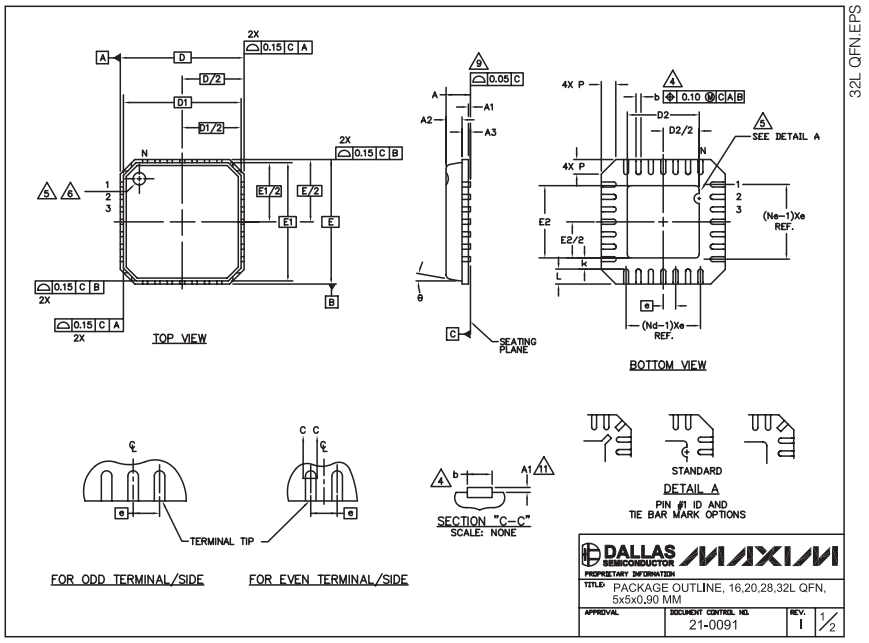

COMMON DIMENSIONS												
PKG	16L 5x5			20L 5x5			28L 5x5			32L 5x5		
SYMBOL	MIN.	NOM.	MAX.	MIN.	NOM.	MAX.	MIN.	NOM.	MAX.	MIN.	NOM.	MAX.
A	0.80	0.90	1.00	0.80	0.90	1.00	0.80	0.90	1.00	0.80	0.90	1.00
A1	0.00	0.01	0.05	0.00	0.01	0.05	0.00	0.01	0.05	0.00	0.01	0.05
A2	0.00	0.65	1.00	0.00	0.65	1.00	0.00	0.65	1.00	0.00	0.65	1.00
A3	0.20 REF			0.20 REF			0.20 REF			0.20 REF		
b	0.28	0.33	0.40	0.23	0.28	0.35	0.18	0.23	0.30	0.18	0.23	0.30
D	4.90	5.00	5.10	4.90	5.00	5.10	4.90	5.00	5.10	4.90	5.00	5.10
D1	4.75 BSC			4.75 BSC			4.75 BSC			4.75 BSC		
E	4.90	5.00	5.10	4.90	5.00	5.10	4.90	5.00	5.10	4.90	5.00	5.10
E1	4.75 BSC			4.75 BSC			4.75 BSC			4.75 BSC		
e	0.80 BSC			0.65 BSC			0.50 BSC			0.50 BSC		
k	0.25	–	–	0.25	–	–	0.25	–	–	0.25	–	–
L	0.35	0.55	0.75	0.35	0.55	0.75	0.35	0.55	0.75	0.30	0.40	0.50
N	16			20			28			32		
ND	4			5			7			8		
NE	4			5			7			8		
P	0.00	0.42	0.60	0.00	0.42	0.60	0.00	0.42	0.60	0.00	0.42	0.60
θ	0°		12°	0°		12°	0°		12°	0°		12°

EXPOSED PAD VARIATIONS						
PKG. CODES	D2			E2		
	MIN.	NOM.	MAX.	MIN.	NOM.	MAX.
G1655-3	2.95	3.10	3.25	2.95	3.10	3.25
G2055-1	2.55	2.70	2.85	2.55	2.70	2.85
G2055-2	2.95	3.10	3.25	2.95	3.10	3.25
G2855-1	2.55	2.70	2.85	2.55	2.70	2.85
G2855-2	2.95	3.10	3.25	2.95	3.10	3.25
G3255-1	2.95	3.10	3.25	2.95	3.10	3.25

NOTES:

1. DIE THICKNESS ALLOWABLE IS 0.305mm MAXIMUM (.012 INCHES MAXIMUM)
2. DIMENSIONING & TOLERANCES CONFORM TO ASME Y14.5M. – 1994.
3. N IS THE NUMBER OF TERMINALS.
   Nd IS THE NUMBER OF TERMINALS IN X-DIRECTION & Ne IS THE NUMBER OF TERMINALS IN Y-DIRECTION.
4. DIMENSION b APPLIES TO PLATED TERMINAL AND IS MEASURED BETWEEN 0.20 AND 0.25mm FROM TERMINAL TIP.
5. THE PIN #1 IDENTIFIER MUST BE EXISTED ON THE TOP SURFACE OF THE PACKAGE BY USING INDENTATION MARK OR INK/LASER MARKED. DETAILS OF PIN #1 IDENTIFIER IS OPTIONAL, BUT MUST BE LOCATED WITHIN ZONE INDICATED.
6. EXACT SHAPE AND SIZE OF THIS FEATURE IS OPTIONAL.
7. ALL DIMENSIONS ARE IN MILLIMETERS.
8. PACKAGE WARPAGE MAX 0.05mm.
9. APPLIED FOR EXPOSED PAD AND TERMINALS. EXCLUDE EMBEDDED PART OF EXPOSED PAD FROM MEASURING.
10. MEETS JEDEC MO220; EXCEPT DIMENSION "b".
11. APPLIED FOR EXPOSED PAD AND TERMINALS. EXCLUDE EMBEDDING PART OF EXPOSED PAD FROM MEASURING.
12. THIS PACKAGE OUTLINE APPLIES TO ANVIL SINGULATION (STEPPED SIDES).

DALLAS SEMICONDUCTOR MAXIM
PROPRIETARY INFORMATION
TITLE: PACKAGE OUTLINE, 16,20,28,32L QFN, 5x5x0.90 MM
APPROVAL | DOCUMENT CONTROL NO. 21-0091 | REV. I | 2/2

Maxim cannot assume responsibility for use of any circuitry other than circuitry entirely embodied in a Maxim product. No circuit patent licenses are implied. Maxim reserves the right to change the circuitry and specifications without notice at any time.

© 2005 Maxim Integrated Products Printed USA MAXIM is a registered trademark of Maxim Integrated Products, Inc.