MAX40002–MAX40005 Evaluation Kits

Evaluates: MAX40002–MAX40005 MAX40012–MAX40015

General Description

The MAX40002–MAX40005 evaluation kits (EV kits) are fully assembled and tested PC boards that evaluate the MAX40002ANS02–MAX40005ANS02 single comparators. The MAX40002ANS02–MAX40005ANS02 operate from a V_{CC} supply between 1.7V to 5.5V, come with an internal reference voltage of 0.2V, and have a wide 0.1V to 5.5V input voltage (IN) range. These EV kits demonstrate the MAX40002ANS02–MAX40005ANS02 in an ultra-small, 0.76mm x 0.76mm, 4-bump wafer-level package (WLP) with 0.35mm bump spacing.

These EV kits are configured to evaluate all devices in the MAX40002–MAX40005/MAX40012–MAX40015 family that have a 4-bump wafer-level package (WLP). To evaluate other WLP devices in this MAX40002–MAX40005/MAX40012–MAX40015 family other than what is pre-installed, replace the U1 IC with the desired part (see *Ordering Information* for details).

Features

- 0.1V to 5.5V Input Voltage Range
- 1.7V to 5.5V External Reference Range (MAX40002ANS–MAX40005ANS)
- 1.7V to 5.5V V_{CC} Range with Internal Reference (MAX40002ANS_ _–MAX40005ANS_ _)
  - 0.2V, 0.5V, 0.9V, and 1.222V Internal Reference Options Available
- Evaluates 4-Bump WLP Package
- Fully Assembled and Tested

***Ordering Information* appears at the end of the data sheet.**

Quick Start

Required Equipment

Before beginning, the following equipment is needed:

- Three +5V DC power supplies (V_{CC}/REF, IN, and V_{PU})
- One digital multimeter (DMM)

Procedure

The MAX40002–MAX40005 EV kits are fully assembled and tested. Follow these steps to verify board operation. **Do not turn on the power supply until all connections are completed.**

1) Connect the positive terminal of a DC power supply to the V_{CC} pad and the ground terminal to the GND pad.
2) Connect the positive terminal of a DC power supply to the V_{PU} pad and the ground terminal to the GND pad (MAX40002/MAX40003/MAX40012/MAX40013 only).
3) Connect the positive terminal of a DC power supply to the IN pad and the ground terminal to the GND pad.
4) Turn on the V_{CC} power supply and set it to the desired level.
5) Turn on the V_{PU} power supply and set it to the desired level (MAX40002/MAX40003/MAX40012/MAX40013 only).
6) Turn on the IN power supply and set it to the desired level.
7) Monitor the output using a DMM at the OUT pad, and study its response to varying voltage at IN (see Table 1 for more information).

maxim integrated™

Table 1. How Devices Behave Under Various Input Voltage Conditions

PART	V_{REF}	INPUT POLARITY	INPUT VOLTAGE CONDITIONS	ACTION AT OUTPUT
MAX40002, MAX40004 MAX40012, MAX40014	External	Noninverting	$V_{IN} > V_{REF}$	Output goes high
			$V_{IN} < V_{REF}$	Output goes low
MAX40003, MAX40005 MAX40013, MAX40015		Inverting	$V_{IN} > V_{REF}$	Output goes low
			$V_{IN} < V_{REF}$	Output goes high
MAX40002, MAX40004 MAX40012, MAX40014	Internal	Noninverting	$V_{IN} > V_{REF_INT}$	Output goes high
			$V_{IN} < V_{REF_INT}$	Output goes low
MAX40003, MAX40005 MAX40013, MAX40015		Inverting	$V_{IN} > V_{REF_INT}$	Output goes low
			$V_{IN} < V_{REF_INT}$	Output goes high

Detailed Description of Hardware

The MAX40002–MAX40005 EV kits are fully assembled and tested PC boards that evaluate the 4-bump WLP MAX40002ANS02–MAX40005ANS02 comparators.

V_{CC}/REF Supply Selection

The V_{CC}/REF pad on the EV kit is used to either supply a 1.7V to 5.5V V_{CC} voltage (internal reference devices) or a 1.7V to 5.5V external reference voltage to the IC. Refer to the MAX40002–MAX40005 and MAX40012–MAX40015 data sheets for more information.

V_{PU} Pad

The V_{PU} pad on the EV kit is used to connect a pullup supply voltage up to 5.5V for the open-drain output devices (MAX40002/MAX40003/MAX40012/MAX40013) for proper operation. Remove R1 and eliminate V_{PU} if evaluating the push-pull output devices (MAX40004/MAX40005/MAX40014/MAX40015).

Ordering Information

PART*	U1 IC (INSTALLED)	V_{REF} (V)	TYPE	SWAP U1 IC TO EVALUATE
MAX40002EVKIT#	MAX40002ANS02+	0.2	EV Kit	MAX40012
MAX40003EVKIT#	MAX40003ANS02+	0.2	EV Kit	MAX40013
MAX40004EVKIT#	MAX40004ANS02+	0.2	EV Kit	MAX40014
MAX40005EVKIT#	MAX40005ANS02+	0.2	EV Kit	MAX40015

#Denotes RoHS-compliant

MAX40002–MAX40005 EV Kit Bill of Materials*

ITEM	REF_DES	DNI/ DNP	QTY	MFG PART #	MFCTR	VALUE	DESCRIPTION
1	C1	-	1	GRM21BR71A475KA73; LMK212B7475KG-T	MURATA/TAIYO YUDEN	4.7UF	CAPACITOR; SMT (0805); CERAMIC CHIP; 4.7UF; 10V; TOL=10%; MODEL=GRM SERIES; TG=-55 DEGC TO +125 DEGC; TC=X7R
2	C2, C4	-	2	C1608X7R1E104K080AA	TDK	0.1UF	CAPACITOR; SMT (0603); CERAMIC CHIP; 0.1UF; 25V; TOL=10%; MODEL=C SERIES; TG=-55 DEGC TO +125 DEGC; TC=X7R
3	GND, TP1, TP2	-	3	5006	KEYSTONE	N/A	TEST POINT; PIN DIA=0.125IN; TOTAL LENGTH=0.35IN; BOARD HOLE=0.063IN; BLACK; PHOSPHOR BRONZE WIRE SILVER PLATE FINISH;
4	IN, OUT, VCC, VPU	-	4	5005	KEYSTONE	N/A	TEST POINT; PIN DIA=0.125IN; TOTAL LENGTH=0.35IN; BOARD HOLE=0.063IN; RED; PHOSPHOR BRONZE WIRE SILVER PLATE FINISH;
5	U1	-	1	MAX40004ANS+	MAXIM	MAX40004ANS+	EVKIT PART-IC; COMP; 600NA; 4-BUMP ULTRA-TINY COMPARATOR; PACKAGE OUTLINE: 21-100103; PACKAGE CODE: N40C0+1; WLP4
6	C3	DNP	0	C1608X7R1E104K080AA	TDK	0.1UF	CAPACITOR; SMT (0603); CERAMIC CHIP; 0.1UF; 25V; TOL=10%; MODEL=C SERIES; TG=-55 DEGC TO +125 DEGC; TC=X7R
7	R1, R2	DNP	0	ERA-3ARB104	PANASONIC	100K	RESISTOR; 0603; 100K OHM; 0.1%; 10PPM; 0.1W; THIN FILM
8	PCB	-	1	MAX40004	MAXIM	PCB	PCB Board:MAX40004 EVALUATION KIT
TOTAL			12				

**Specified for the MAX40004. For other variants, change U1 to the desired device. All other components are the same.*

MAX40002–MAX40005 EV Kit PCB Layout Diagrams*

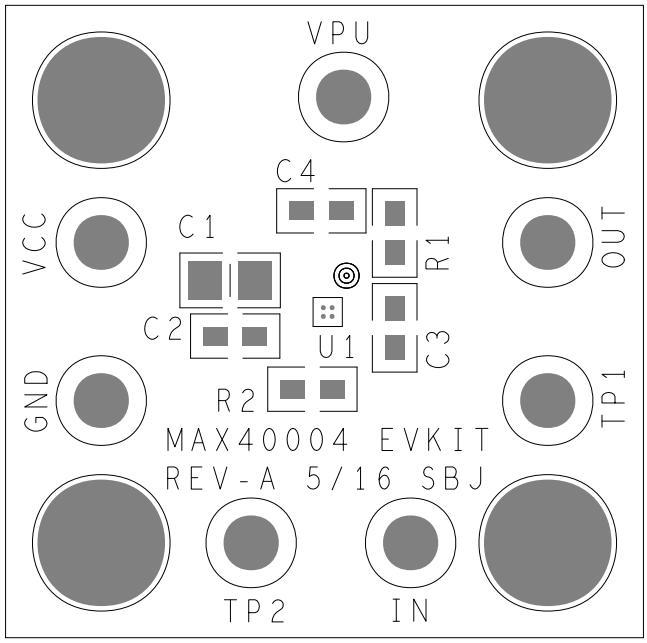

MAX40002–MAX40005 EV Kit—Top Silkscreen

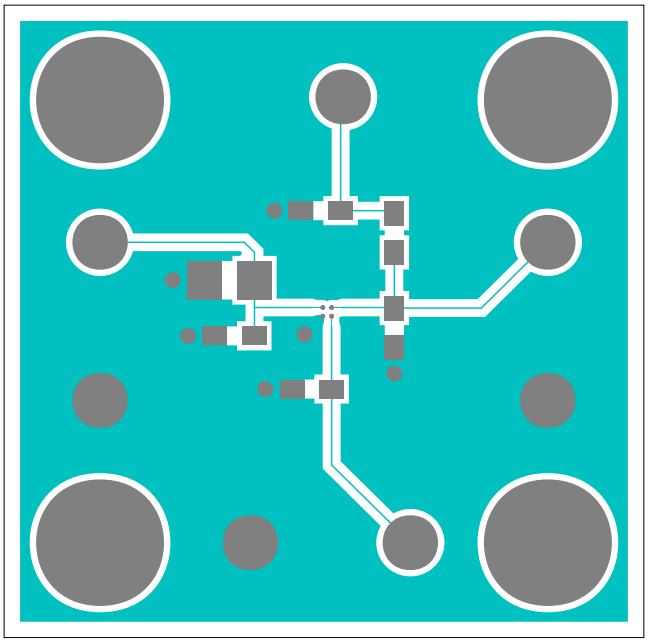

MAX40002–MAX40005 EV Kit—Top

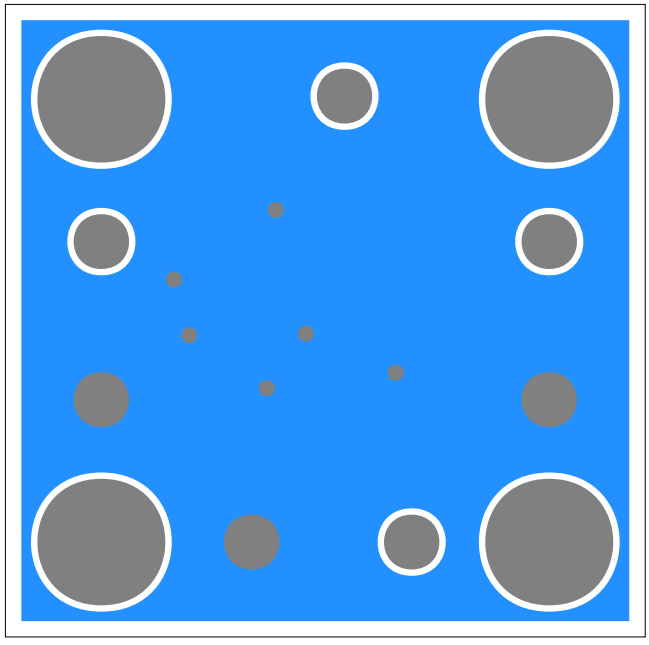

MAX40002–MAX40005 EV Kit—Bottom



MAX40002–MAX40005 EV Kit—Bottom Silkscreen

**Specified for the MAX40004. For other variants, change U1 to the desired device. All other components are the same.*

MAX40002–MAX40005 EV Kit Schematic*

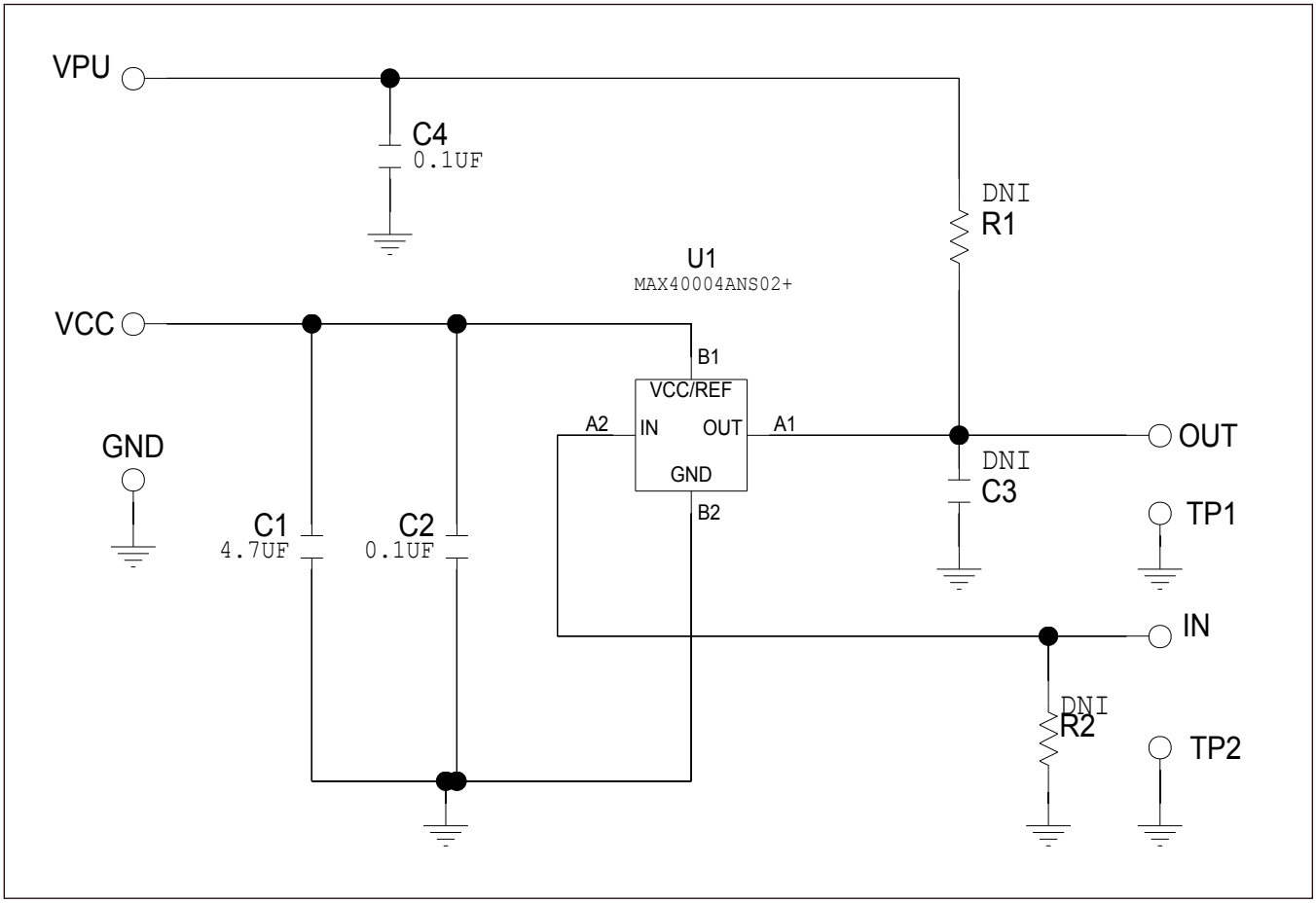

*Specified for the MAX40004. For other variants, change U1 to the desired device. All other components are the same.

Revision History

REVISION NUMBER	REVISION DATE	DESCRIPTION	PAGES CHANGED
0	1/17	Initial release	—
1	2/20	Added MAX40012–MAX40015 part numbers to data sheet	1–6

For pricing, delivery, and ordering information, please visit Maxim Integrated's online storefront at https://www.maximintegrated.com/en/storefront/storefront.html.

Maxim Integrated cannot assume responsibility for use of any circuitry other than circuitry entirely embodied in a Maxim Integrated product. No circuit patent licenses are implied. Maxim Integrated reserves the right to change the circuitry and specifications without notice at any time.