MAX4206

Precision Transimpedance Logarithmic Amplifier with Over 5 Decades of Dynamic Range

General Description

The MAX4206 logarithmic amplifier computes the log ratio of an input current relative to a reference current (externally or internally generated) and provides a corresponding voltage output with a default 0.25V/decade scale factor. The device operates from a single +2.7V to +11V supply or from dual ±2.7V to ±5.5V supplies and is capable of measuring five decades of input current across a 10nA to 1mA range.

The MAX4206's uncommitted op amp can be used for a variety of functions, including filtering noise, adding offset, and adding additional gain. A 0.5V reference is also included to generate an optional precision current reference using an external resistor, which adjusts the log intercept of the MAX4206. The output-offset voltage and the adjustable scale factor are also set using external resistors.

The MAX4206 is available in a space-saving 16-pin TQFN package (4mm x 4mm x 0.8mm), and is specified for operation over the -40°C to +85°C extended temperature range.

Applications

Photodiode Current Monitoring

Portable Instrumentation

Medical Instrumentation

Analog Signal Processing

Pin Configuration

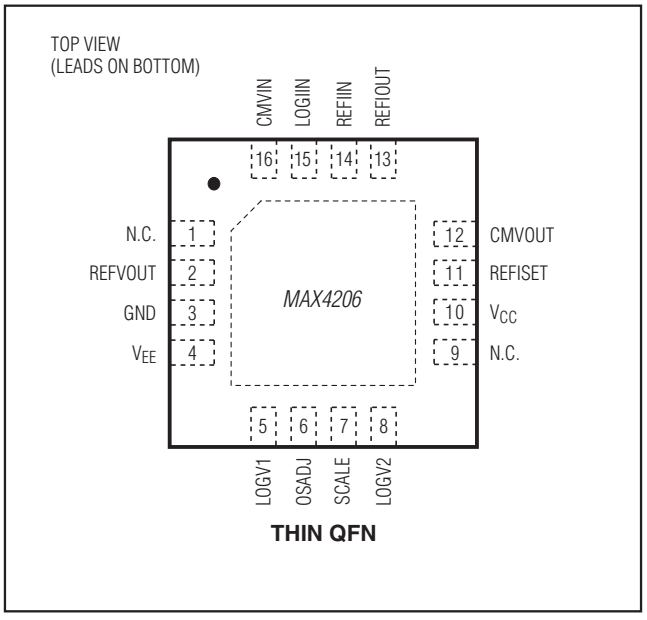

Benefits and Features

- Single Supply Capability Reduces System Power Supply Requirements
  - +2.7V to +11V Single-Supply Operation
  - Also Supports ±2.7V to ±5.5V Dual-Supply Operation if Required
- Wide Dynamic Range Supports Most Photodiode Current Measurement Applications
  - 5 Decades of Dynamic Range (10nA to 1mA)
  - Monotonic Over a 1nA to 1mA Range
  - Adjustable Output Scale Factor
  - 0.25V/Decade Internally Trimmed Output Scale Factor
  - Adjustable Output Offset Voltage
  - Internal 10nA to 10µA Reference Current Source
  - 0.5V Input Common-Mode Voltage
- Small Package and Few External Components Saves Space and Simplifies Design-In
  - 16-Pin TQFN Package (4mm x 4mm x0.8mm)

Ordering Information

PART	TEMP RANGE	PIN-PACKAGE
MAX4206ETE	-40°C to +85°C	16 TQFN-EP*

**EP = Exposed pad.*

Typical Operating Circuit

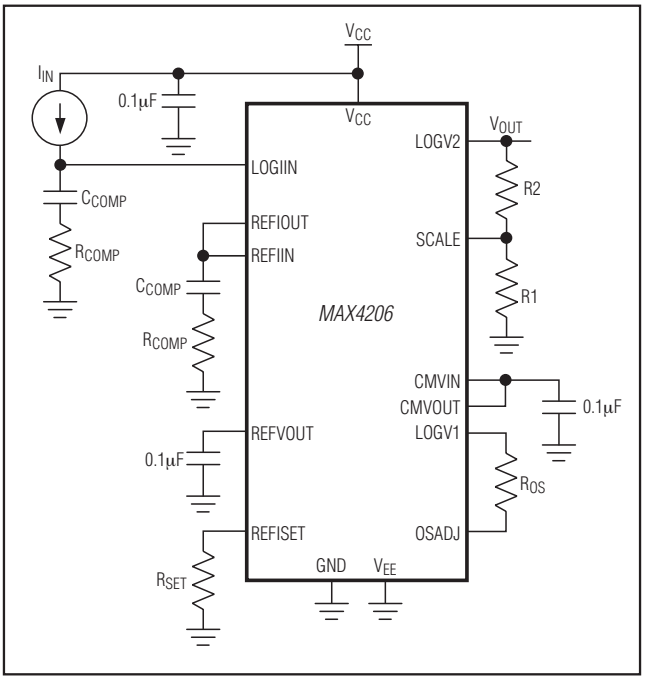

maxim integrated™

Absolute Maximum Ratings

(All voltages referenced to GND, unless otherwise noted.)

V_{CC} .....-0.3V to +12V
V_{EE} .....-6V to +0.3V
Supply Voltage (V_{CC} to V_{EE}) ..... +12V
REFVOUT .....(V_{EE} - 0.3V) to +3.0V
OSADJ, SCALE, REFISET .....(V_{EE} - 0.3V) to +5.5V
REFIIN, LOGIIN .....(V_{EE} - 0.3V) to V_{CMVIN}
LOGV1, LOGV2, CMVOUT, REFIOUT .....(V_{EE} - 0.3V) to (V_{CC} + 0.3V)
CMVIN .....(V_{EE} - 0.3V) to +1V
Continuous Current (REFIIN, LOGIIN) 10mA
Continuous Power Dissipation (T_A = +70°C)
16-Pin Thin QFN (derate 16.9mW/°C above +70°C) 1349mW
Operating Temperature Range .....-40°C to +85°C
Junction Temperature .....+150°C
Storage Temperature Range .....-65°C to +150°C
Lead Temperature (soldering, 10s) .....+300°C

Stresses beyond those listed under "Absolute Maximum Ratings" may cause permanent damage to the device. These are stress ratings only, and functional operation of the device at these or any other conditions beyond those indicated in the operational sections of the specifications is not implied. Exposure to absolute maximum rating conditions for extended periods may affect device reliability.

DC Electrical Characteristics—Single-Supply Operation

(V_{CC} = +5V, V_{EE} = GND = 0V, I_{REF} = 1µA, I_{LOG} = 10µA, LOGV2 = SCALE, LOGV1 = OSADJ, CMVIN = CMVOUT, R_{SET} > 1MΩ, T_A = -40°C to +85°C. Typical values are at T_A = +25°C, unless otherwise noted.) (Note 1)

PARAMETER	SYMBOL	CONDITIONS		MIN	TYP	MAX	UNITS
Supply Voltage	V_{CC}	(Note 2)		2.7		11.0	V
Supply Current	I_{CC}	T_A = +25°C			3.9	5	mA
		T_A = -40°C to +85°C				7	
LOGIIN Current Range (Notes 3, 4)	I_{LOG}	Minimum		10			nA
		Maximum				1	mA
REFIIN Current Range (Notes 3, 4)	I_{REF}	Minimum		10			nA
		Maximum				1	mA
Common-Mode Voltage	V_{CMVOUT}			480	500	520	mV
Common-Mode Voltage Input Range	V_{CMVIN}			0.5		1.0	V
Log Conformity Error	V_{LC}	I_{REF} = 10nA, I_{LOG}= 10nA to 1mA, K = 0.25V/decade (Note 4)	T_A = +25°C		±2	±5	mV
			T_A = -40°C to +85°C			±10	
Logarithmic Slope (Scale Factor)	K	T_A = +25°C		237.5	250	262.5	mV/ decade
		T_A = -40°C to +85°C (Note 4)		231.25		268.75	
Logarithmic Slope (Scale Factor) Temperature Drift		T_A = -40°C to +85°C			80		µV/ decade/ °C
Input Offset Voltage	V_{IO}	T_A = +25°C, $\lvert V_{CMVIN} - V_{REFIIN}\rvert$, $\lvert V_{CMVIN} - V_{LOGIIN}\rvert$			1	5	mV
Input Offset Voltage Temperature Drift	V_{IOS}	$\lvert V_{CMVIN} - V_{REFIIN}\rvert$, $\lvert V_{CMVIN} - V_{LOGIIN}\rvert$			6		µV/°C
Voltage Reference Output	$V_{REFVOUT}$	T_A = +25°C		1.218	1.238	1.258	V
		T_A = -40°C to +85°C (Note 4)		1.195		1.275	
Voltage Reference Output Current	$I_{REFVOUT}$				1		mA
Current Reference Output Voltage	$V_{REFISET}$	T_A = +25°C		490	500	510	mV
		T_A = -40°C to +85°C (Note 4)		482		518	

DC Electrical Characteristics—Single-Supply Operation (continued)

(V_{CC} = +5V, V_{EE} = GND = 0V, I_{REF} = 1µA, I_{LOG} = 10µA, LOGV2 = SCALE, LOGV1 = OSADJ, CMVIN = CMVOUT, R_{SET} > 1MΩ, T_A = -40°C to +85°C. Typical values are at T_A = +25°C, unless otherwise noted.) (Note 1)

PARAMETER	SYMBOL	CONDITIONS	MIN	TYP	MAX	UNITS
LOGV2 BUFFER						
Input Offset Voltage	V_{IO}	T_A = +25°C		0.4	2	mV
		T_A = -40°C to +85°C (Note 4)			6	
Input Bias Current	I_B	(Note 4)		0.01	1	nA
Output Voltage Range	V_{OH}	R_L to GND = 2kΩ		V_{CC} - 0.2	V_{CC} - 0.3	V
	V_{OL}	R_L to GND = 2kΩ	0.2	0.08		
Output Short-Circuit Current	I_{OUT+}	Sourcing		34		mA
	I_{OUT-}	Sinking		58		
Slew Rate	SR			12		V/µs
Unity-Gain Bandwidth	GBW			5		MHz

AC Electrical Characteristics—Single-Supply Operation

(V_{CC} = +5V, V_{EE} = GND = 0, I_{REF} = 1µA, I_{LOG} = 10µA, LOGV2 = SCALE, LOGV1 = OSADJ, CMVIN = CMVOUT, R_{SET} > 1MΩ, T_A = +25°C, unless otherwise noted.)

PARAMETER	SYMBOL	CONDITIONS	MIN	TYP	MAX	UNITS
LOGV2 Total Noise		0.1Hz to 10Hz, total output-referred noise, I_{REF} = 10nA, I_{LOG} = 100nA		17		$µV_{RMS}$
LOGV2 Spot Noise Density		f = 5kHz, I_{REF} = 10nA, I_{LOG} = 100nA		0.8		$µV/\sqrt{Hz}$
REFVOUT Total Noise		1Hz to 10Hz, total output-referred noise		3.3		$µV_{RMS}$
REFVOUT Spot Noise Density		f = 5kHz		266		$nV/\sqrt{Hz}$
REFISET Total Noise		1Hz to 10Hz, total output-referred noise		0.67		$µV_{RMS}$
REFISET Spot Noise Density		f = 5kHz		23		$nV/\sqrt{Hz}$
Small-Signal Unity-Gain Bandwidth		I_{REF} = 1µA, I_{LOG} = 10µA, R_{COMP} = 300Ω, C_{COMP} = 32pF		1		MHz

DC Electrical Characteristics—Dual-Supply Operation

(V_{CC} = +5V, V_{EE} = -5V, GND = 0, I_{REF} = 1µA, I_{LOG} = 10µA, LOGV2 = SCALE, LOGV1 = OSADJ, CMVIN = CMVOUT, R_{SET} > 1MΩ, T_A = -40°C to +85°C. Typical values are at T_A = +25°C, unless otherwise noted.) (Note 1)

PARAMETER	SYMBOL	CONDITIONS	MIN	TYP	MAX	UNITS
Supply Voltage (Note 2)	V_{CC}		2.7		5.5	V
	V_{EE}		-2.7		-5.5	
Supply Current	I_{CC}	T_A = +25°C		5	6	mA
		T_A = -40°C to +85°C			7.5	
LOGIIN Current Range (Notes 3, 4)	I_{LOG}	Minimum	10			nA
		Maximum			1	mA
REFIIN Current Range (Notes 3, 4)	I_{REF}	Minimum	10			nA
		Maximum			1	mA
Common-Mode Voltage	V_{CMVOUT}		480	500	520	mV

DC Electrical Characteristics—Dual-Supply Operation (continued)

(V_{CC} = +5V, V_{EE} = -5V, GND = 0, I_{REF} = 1µA, I_{LOG} = 10µA, LOGV2 = SCALE, LOGV1 = OSADJ, CMVIN = CMVOUT, R_{SET} > 1MΩ, T_A = -40°C to +85°C. Typical values are at T_A = +25°C, unless otherwise noted.) (Note 1)

PARAMETER	SYMBOL	CONDITIONS		MIN	TYP	MAX	UNITS
Common-Mode Voltage Input Range	V_{CMVIN}			0.5		1.0	V
Log Conformity Error	V_{LC}	I_{REF} = 10nA, I_{LOG}= 10nA to 1mA, K = 0.25V/decade (Note 4)	T_A = +25°C		±2	±5	mV
			T_A = -40°C to +85°C			±10	
Logarithmic Slope (Scale Factor)	K	T_A = +25°C		237.5	250	262.5	mV/ decade
		T_A = -40°C to +85°C		231.25		268.75	
Logarithmic Slope (Scale Factor) Temperature Drift		T_A = -40°C to +85°C			80		µV/ decade/ °C
Input Offset Voltage	V_{IO}	T_A = +25°C, $\lvert V_{CMVIN} - V_{REFIIN}\rvert$, $\lvert V_{CMVIN} - V_{LOGIIN}\rvert$			1	5	mV
Input Offset Voltage Temperature Drift	V_{IOS}	$\lvert V_{CMVIN} - V_{REFIIN}\rvert$, $\lvert V_{CMVIN} - V_{LOGIIN}\rvert$			6		µV/°C
Voltage Reference Output	$V_{REFVOUT}$	T_A = +25°C		1.218	1.238	1.258	V
		T_A = -40°C to +85°C (Note 4)		1.195		1.275	
Voltage Reference Output Current	$I_{REFVOUT}$				1		mA
Current Reference Output Voltage	$V_{REFISET}$	T_A = +25°C		490	500	510	mV
		T_A = -40°C to +85°C (Note 4)		482		518	
LOGV2 BUFFER							
Input Offset Voltage	V_{IO}	T_A = +25°C			0.4	2	mV
		T_A = -40°C to +85°C (Note 4)				6	
Input Bias Current	I_B	(Note 4)			0.01	1	nA
Output Voltage Range	V_{OH}	R_L to GND = 2kΩ			V_{CC} - 0.2	V_{CC} - 0.3	V
	V_{OL}	R_L to GND = 2kΩ		V_{EE} + 0.2	V_{EE} + 0.08		
Output Short-Circuit Current	I_{OUT+}	Sourcing			34		mA
	I_{OUT-}	Sinking			58		
Slew Rate	SR				12		V/µs
Unity-Gain Bandwidth	GBW				5		MHz

AC Electrical Characteristics—Dual-Supply Operation

(V_{CC} = +5V, V_{EE} = -5V, GND = 0, I_{REF} = 1µA, I_{LOG} = 10µA, LOGV2 = SCALE, LOGV1 = OSADJ, CMVIN = CMVOUT, R_{SET} > 1MΩ, T_A = +25°C, unless otherwise noted.)

PARAMETER	SYMBOL	CONDITIONS	MIN	TYP	MAX	UNITS
LOGV2 Total Noise		0.1Hz to 10Hz, total output-referred noise, I_{REF} = 10nA, I_{LOG} = 100nA		17		μV_{RMS}
LOGV2 Spot Noise Density		f = 5kHz, I_{REF} = 10nA, I_{LOG} = 100nA		0.8		$\mu V/\sqrt{Hz}$
REFVOUT Total Noise		1Hz to 10Hz, total output-referred noise		3.3		μV_{RMS}
REFVOUT Spot Noise Density		f = 5kHz		266		$nV/\sqrt{Hz}$
REFISET Total Noise		1Hz to 10Hz, total output-referred noise		0.67		μV_{RMS}
REFISET Spot Noise Density		f = 5kHz		23		$nV/\sqrt{Hz}$
Small-Signal Unity-Gain Bandwidth		I_{REF} = 1µA, I_{LOG} = 10µA, R_{COMP} = 300Ω, C_{COMP} = 32pF		1		MHz

Note 1: All devices are 100% production tested at T_A = +25°C. All temperature limits are guaranteed by design.
Note 2: Guaranteed and functionally verified.
Note 3: Log conformity error less than ±5mV with scale factor = 0.25V/decade.
Note 4: Guaranteed by design.

Typical Operating Characteristics

(V_{CC} = +5V, V_{EE} = GND = 0V, I_{REF} = 1µA, I_{LOG} = 10µA, LOGV2 = SCALE, LOGV1 = OSADJ, CMVIN = CMVOUT, R_{SET} > 1MΩ, T_A = +25°C, unless otherwise noted.)

V_{LOGV1} vs. I_{LOG}

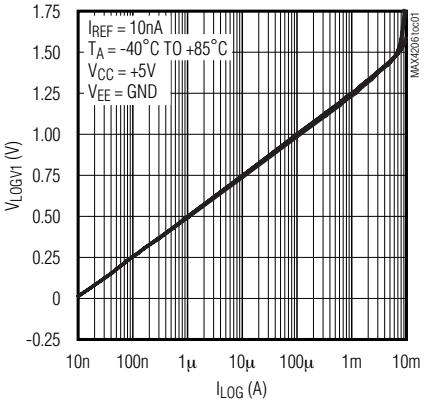

V_{LOGV1} vs. I_{LOG} (I_{REF} = 10nA)

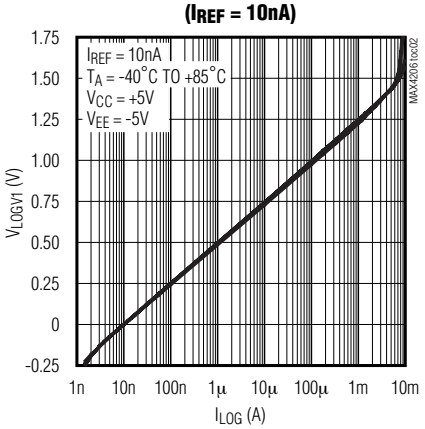

V_{LOGV1} vs. I_{LOG}

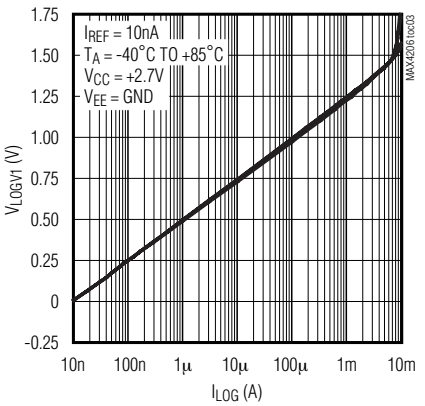

Typical Operating Characteristics (continued)

(V_{CC} = +5V, V_{EE} = GND = 0V, I_{REF} = 1µA, I_{LOG} = 10µA, LOGV2 = SCALE, LOGV1 = OSADJ, CMVIN = CMVOUT, R_{SET} > 1MΩ, T_A = +25°C, unless otherwise noted.)

V_{LOGV1} vs. I_{LOG} (I_{REF} = 10nA TO 1mA)

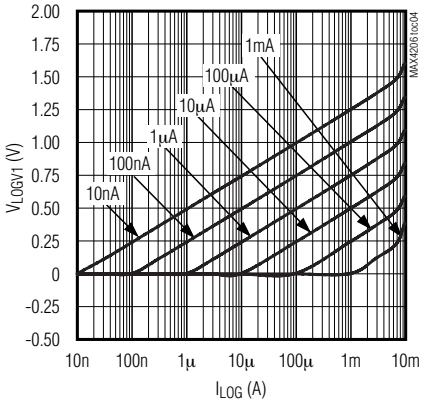

V_{LOGV1} vs. I_{REF} (I_{LOG} = 10nA TO 1mA)

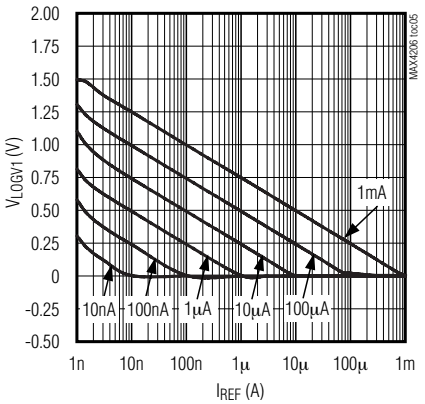

NORMALIZED LOG CONFORMANCE ERROR vs. I_{LOG}

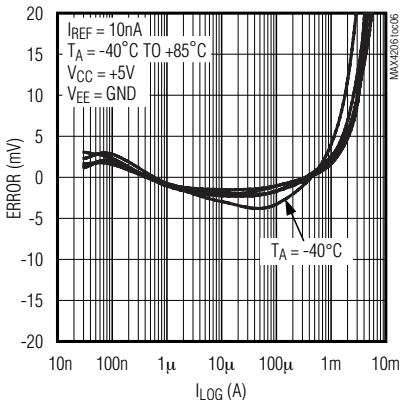

NORMALIZED LOG CONFORMANCE ERROR vs. I_{LOG}

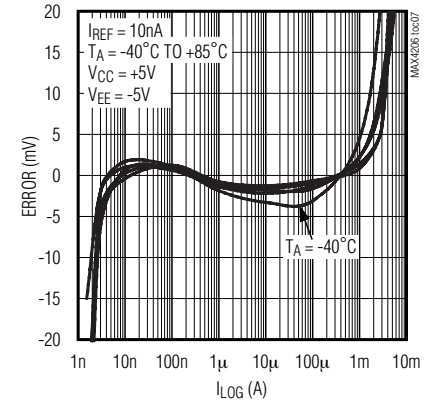

NORMALIZED LOG CONFORMANCE ERROR vs. I_{LOG}

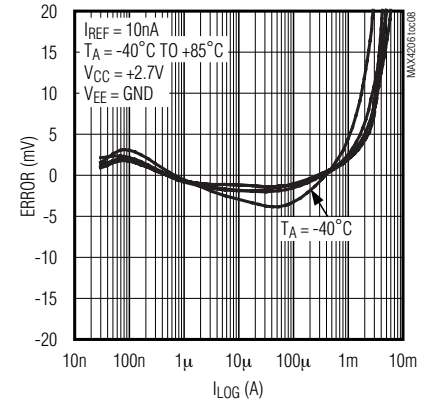

NORMALIZED LOG CONFORMANCE ERROR vs. I_{LOG}

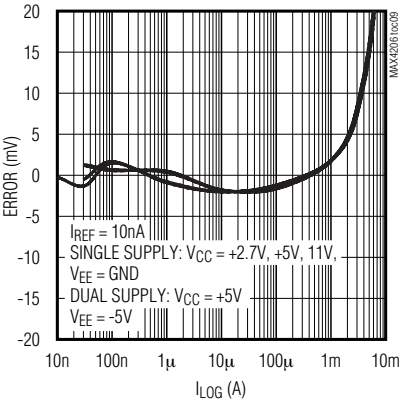

V_{LOGIIN} - V_{CMVIN} vs. I_{LOG}

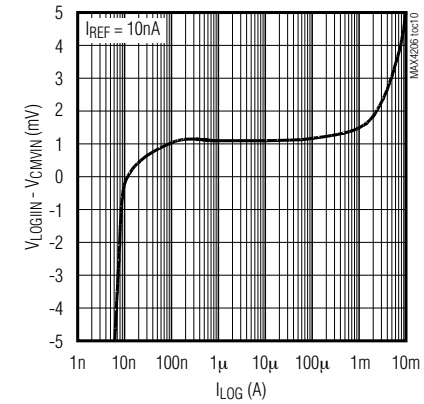

vs. FREQUENCY

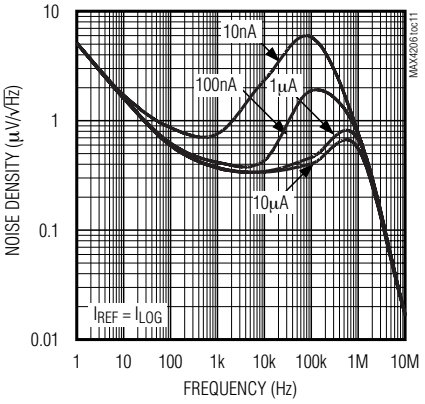

AT V_{LOGV2} vs. I_{LOG}

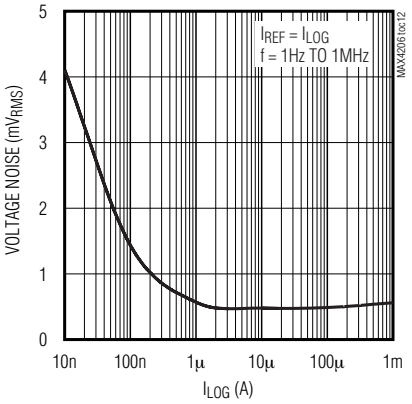

Typical Operating Characteristics (continued)

(V_{CC} = +5V, V_{EE} = GND = 0V, I_{REF} = 1µA, I_{LOG} = 10µA, LOGV2 = SCALE, LOGV1 = OSADJ, CMVIN = CMVOUT, R_{SET} > 1MΩ, T_A = +25°C, unless otherwise noted.)

I_{LOG} PULSE RESPONSE (I_{REF} = 100nA, V_{CC} = 5V, V_{EE} = GND)

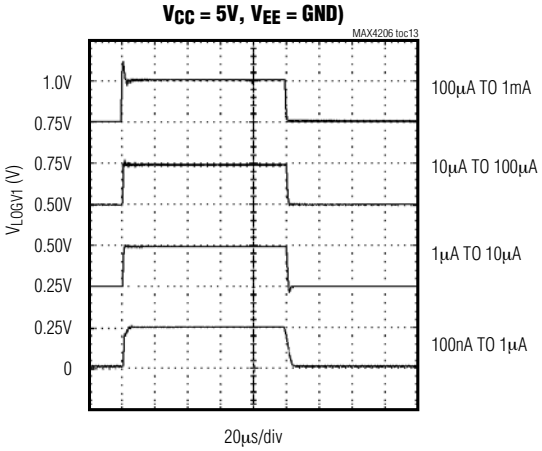

I_{LOG} PULSE RESPONSE (I_{REF} = 100nA, V_{CC} = 5V, V_{EE} = -5V)

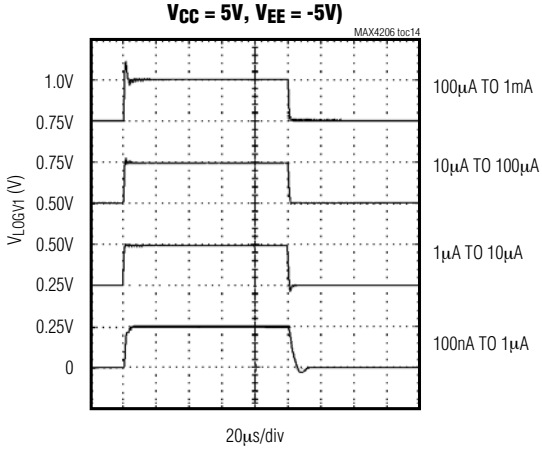

I_{REF} PULSE RESPONSE (I_{LOG} = 1mA)

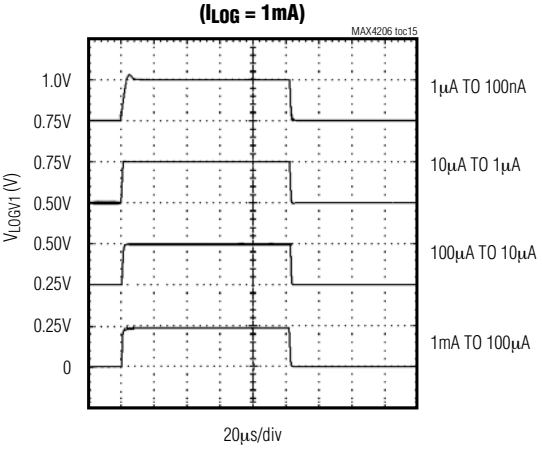

LOGARITHMIC SLOPE DISTRIBUTION

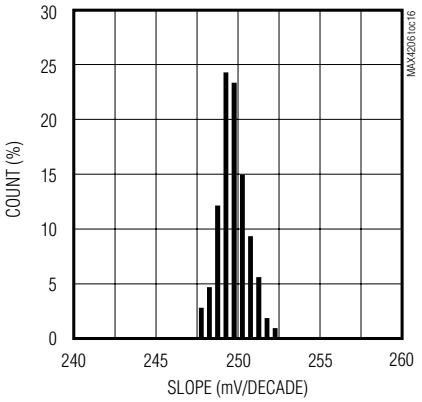

$V_{REFVOUT}$ DISTRIBUTION

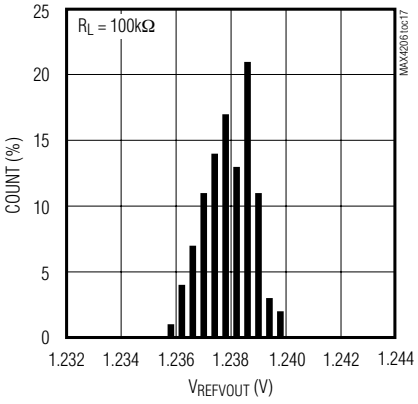

INPUT OFFSET VOLTAGE DISTRIBUTION

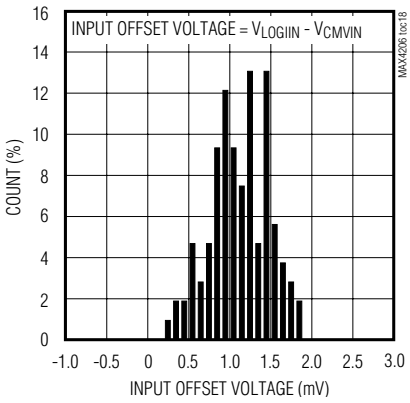

Typical Operating Characteristics (continued)

(V_{CC} = +5V, V_{EE} = GND = 0V, I_{REF} = 1µA, I_{LOG} = 10µA, LOGV2 = SCALE, LOGV1 = OSADJ, CMVIN = CMVOUT, R_{SET} > 1MΩ, T_A = +25°C, unless otherwise noted.)T_A = +25°C, unless otherwise noted.)

OUTPUT OFFSET VOLTAGE vs. TEMPERATURE

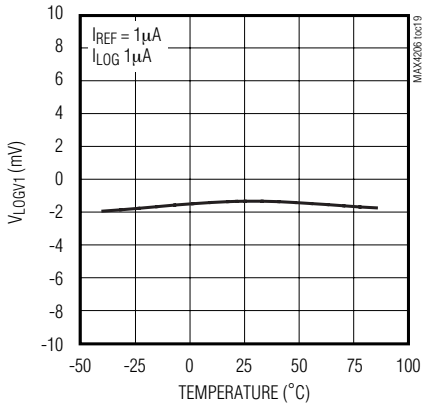

REFERENCE OUTPUT VOLTAGE ($V_{REFVOUT}$) vs. TEMPERATURE

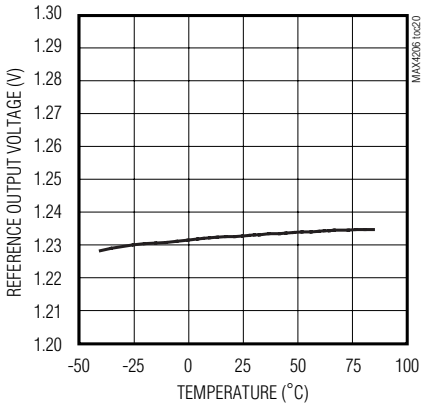

REFERENCE OUTPUT VOLTAGE ($V_{REFVOUT}$) vs. LOAD CURRENT

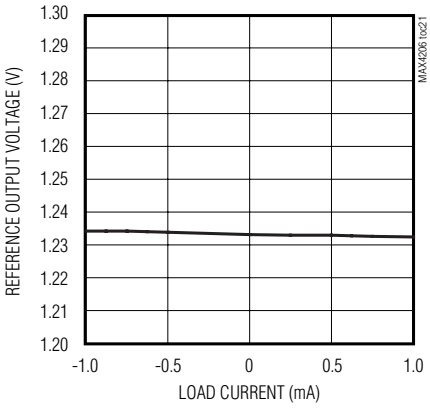

REFERENCE OUTPUT VOLTAGE ($V_{REFVOUT}$) vs. SUPPLY VOLTAGE

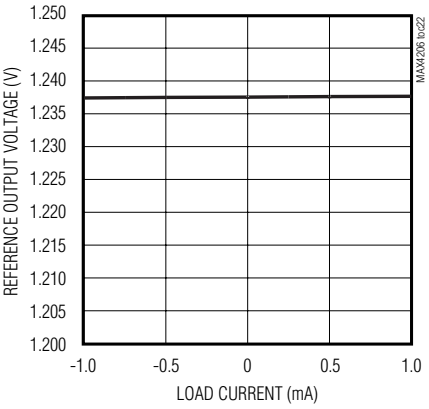

REFERENCE POWER-SUPPLY REJECTION RATIO vs. FREQUENCY

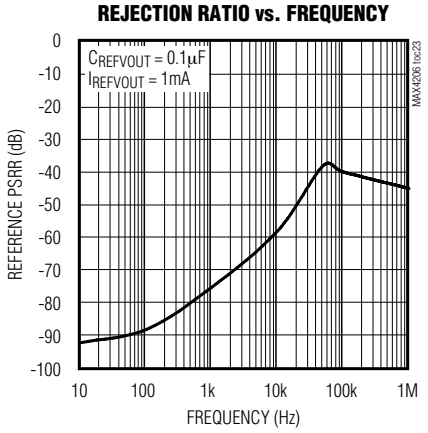

REFERENCE LINE-TRANSIENT RESPONSE

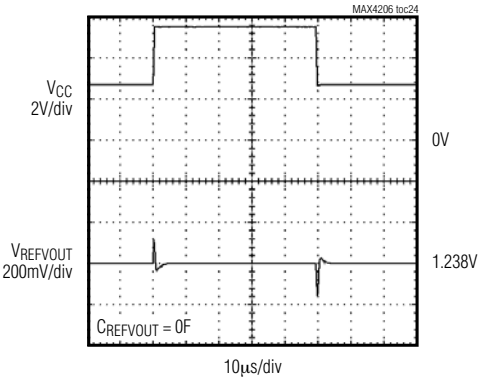

REFERENCE LOAD-TRANSIENT RESPONSE

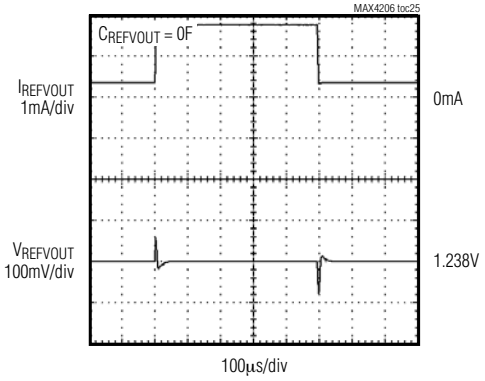

REFERENCE TURN-ON TRANSIENT RESPONSE

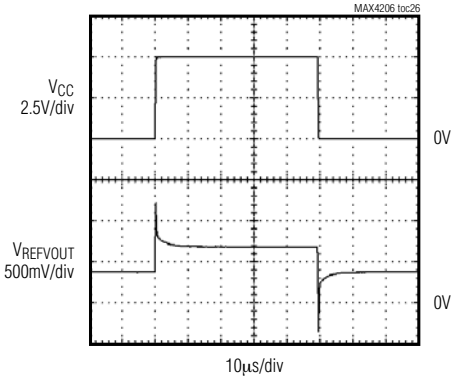

Typical Operating Characteristics (continued)

(V_{CC} = +5V, V_{EE} = GND = 0V, I_{REF} = 1µA, I_{LOG} = 10µA, LOGV2 = SCALE, LOGV1 = OSADJ, CMVIN = CMVOUT, R_{SET} > 1MΩ, T_A = +25°C, unless otherwise noted.)T_A = +25°C, unless otherwise noted.)

SMALL-SIGNAL AC RESPONSE
I_{LOG} TO V_{LOGV1}

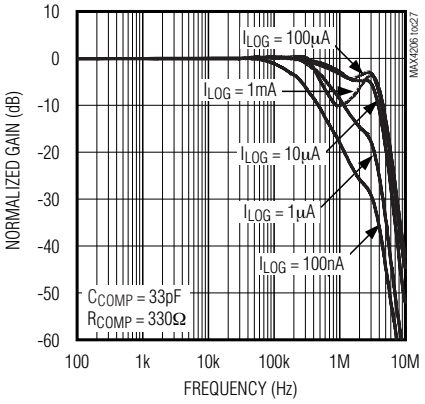

SMALL-SIGNAL AC RESPONSE
I_{LOG} TO V_{LOGV1}

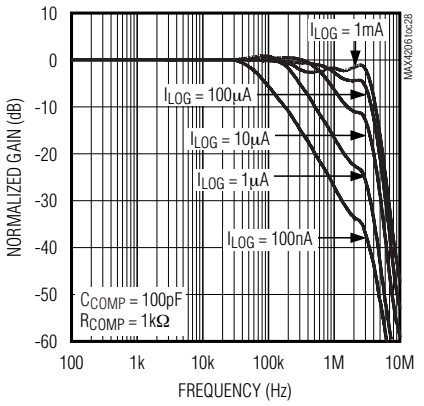

SMALL-SIGNAL AC RESPONSE
OF BUFFER

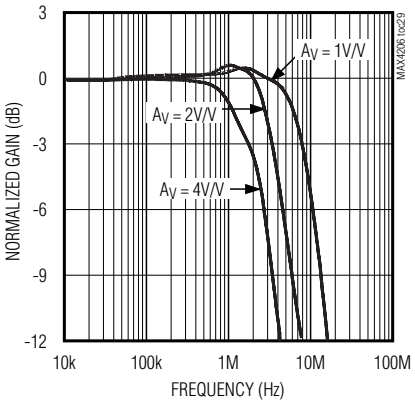

Pin Description

PIN	NAME	FUNCTION
1, 9	N.C.	No Connection. Not internally connected.
2	REFVOUT	1.238V Reference Voltage Output. Bypass REFVOUT to GND with a 0 to 1µF capacitor (optional).
3	GND	Ground
4	V_{EE}	Negative Power Supply. Bypass V_{EE} to GND with a 0.1µF capacitor.
5	LOGV1	Logarithmic Amplifier Voltage Output 1. The output scale factor of LOGV1 is 0.25V/decade.
6	OSADJ	Offset Adjust Input. When operating from a single power supply, current applied to OSADJ adjusts the output offset voltage (see the *Output Offset* section).
7	SCALE	Scale Factor Input. Adjust the output scale factor for LOGV2 using a resistive divider (see the *Scale Factor* section).
8	LOGV2	Logarithmic Amplifier Voltage Output 2. Adjust the output scale factor for LOGV2 using a resistive divider (see the *Scale Factor* section).
10	V_{CC}	Positive Power Supply. Bypass V_{CC} to GND with a 0.1µF capacitor.
11	REFISET	Current Reference Adjust Input. A resistor (R_{SET}), from REFISET to GND, adjusts the current at REFIOUT (see the *Adjusting the Logarithmic Intercept* section).
12	CMVOUT	0.5V Common-Mode Voltage Reference Output. Bypass CMVOUT to GND with a 0.1µF capacitor.
13	REFIOUT	Current Reference Output. The internal current reference output is available at REFIOUT**.**
14	REFIIN	Current Reference Input. Apply an external reference current at REFIIN. I_{REFIIN} is the reference current used by the logarithmic amplifier when generating LOGV1.
15	LOGIIN	Current Input to Logarithmic Amplifier. LOGIIN is typically connected to a photodiode anode or other external current source.
16	CMVIN	Common-Mode Voltage Input. V_{CMVIN} is the common-mode voltage for the input and reference amplifiers (see the *Common Mode* section).

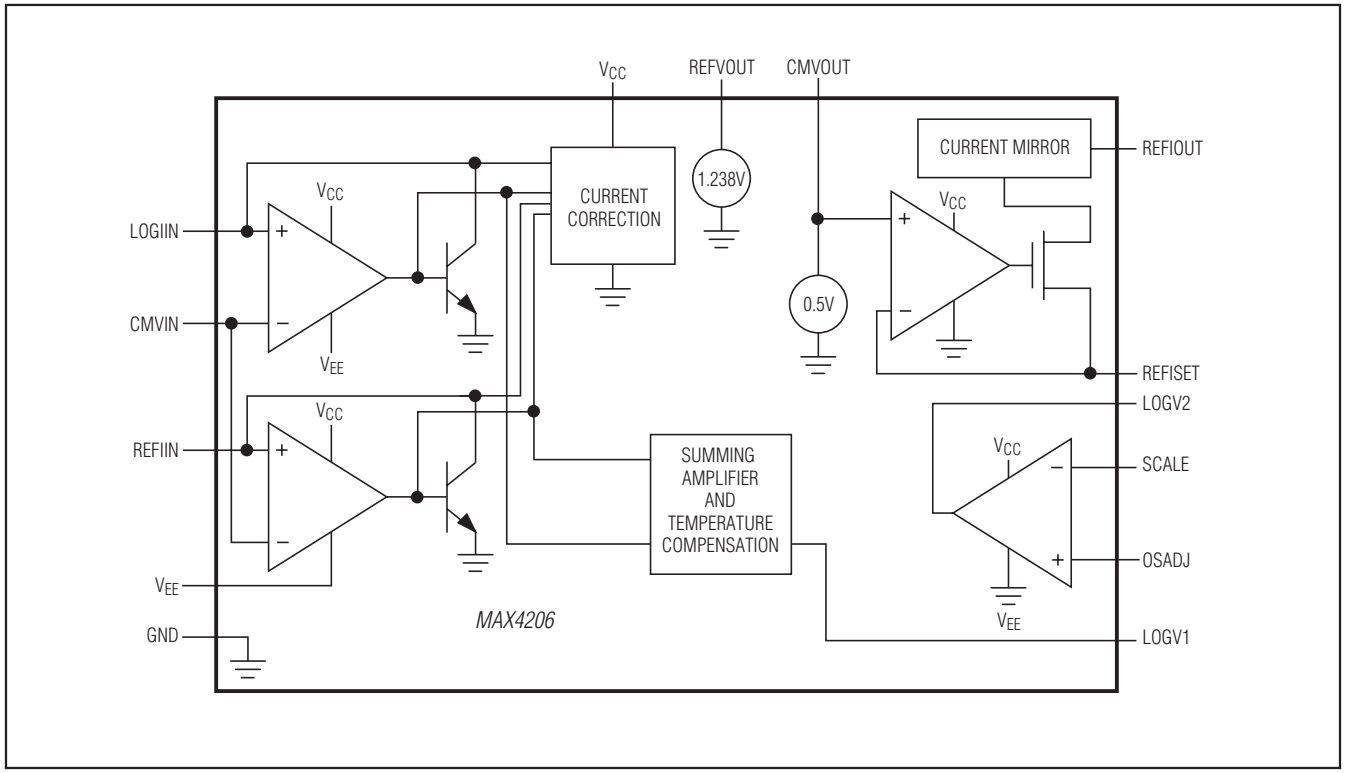

Figure 1. Functional Diagram

Detailed Description

Theory

Figure 2 shows a simplified model of a logarithmic amplifier. Two transistors convert the currents applied at LOGIIN and REFIIN to logarithmic voltages according to the following equation:

$$V_{BE} = \left(\frac{kT}{q}\right) \ln\left(\frac{I_C}{I_S}\right)$$

where:

V_{BE} = base-emitter voltage of a bipolar transistor

$k = 1.381 \times 10^{-23}$ J/K

T = absolute temperature (K)

$q = 1.602 \times 10^{-19}$ C

I_C = collector current

I_S = reverse saturation current

The logarithmic amplifier compares V_{BE1} to the reference voltage V_{BE2}, which is a logarithmic voltage for a known reference current, I_{REF}. The temperature dependencies of a logarithmic amplifier relate to the thermal voltage, (kT/q), and I_S. Matched transistors eliminate the I_S temperature dependence of the amplifier in the following manner:

$$V_{OUT} = V_{BE1} - V_{BE2}$$

$$= \left(\frac{kT}{q}\right)\ln\left(\frac{I_{LOG}}{I_S}\right) - \left(\frac{kT}{q}\right)\ln\left(\frac{I_{REF}}{I_S}\right)$$

$$= \left(\frac{kT}{q}\right)\left[\ln\left(\frac{I_{LOG}}{I_S}\right) - \ln\left(\frac{I_{REF}}{I_S}\right)\right]$$

$$= \left(\frac{kT}{q}\right)\left[\ln\left(\frac{I_{LOG}}{I_{REF}}\right)\right]$$

$$= \left(\frac{kT}{q}\right)(\ln(10))\left[\log_{10}\left(\frac{I_{LOG}}{I_{REF}}\right)\right]$$

$$= K \times \log_{10}\left(\frac{I_{LOG}}{I_{REF}}\right) \quad \text{(see Figure 3)}$$

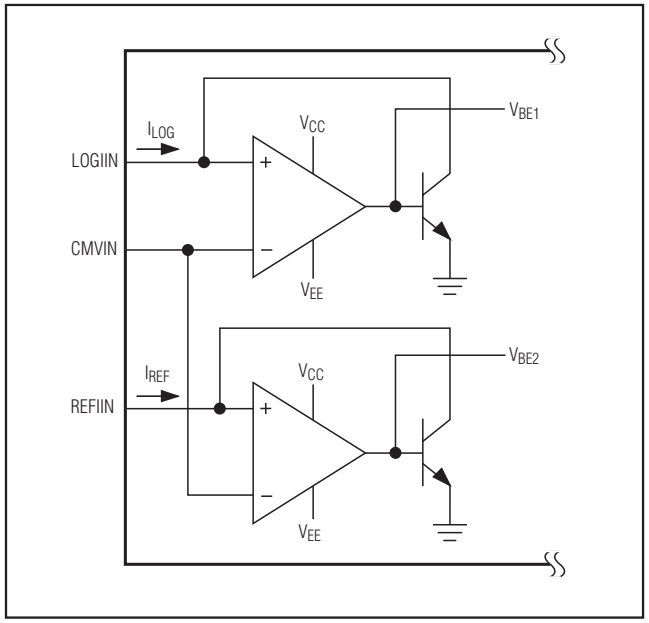

Figure 2. Simplified Model of a Logarithmic Amplifier

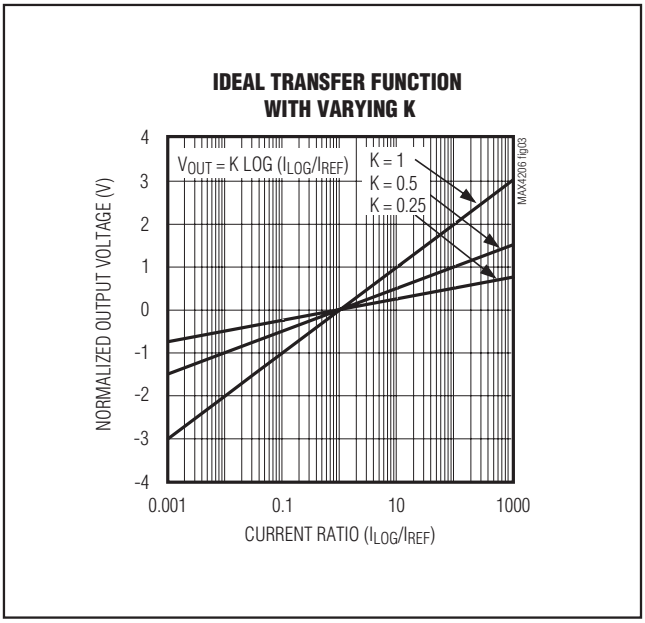

Figure 3. Ideal Transfer Function with Varying K

where:

K = scale factor (V/decade)

I_{LOG} = the input current at LOGIIN

I_{REF} = the reference current at REFIIN

The MAX4206 uses internal temperature compensation to virtually eliminate the effects of the thermal voltage, (kT/q), on the amplifier's scale factor, maintaining a constant slope over temperature.

Definitions

Transfer Function

The ideal logarithmic amplifier transfer function is:

$$V_{IDEAL} = K \times \log_{10}\left(\frac{I_{LOG}}{I_{REF}}\right)$$

Adjust K (see the *Scale Factor* section) to increase the transfer-function slope as illustrated in Figure 3. Adjust I_{REF} using REFISET (see the *Adjusting the Logarithmic Intercept* section) to shift the logarithmic intercept to the left or right as illustrated in Figure 4.

Log Conformity

Log conformity is the maximum deviation of the MAX4206's output from the best-fit straight line of the V_{LOGV1} versus log (I_{LOG}/I_{REF}) curve. It is expressed as a percent of the full-scale output or an output voltage.

Referred-to-Input and Referred-to-Output Errors

The log nature of the MAX4206 insures that any additive error at LOGV1 corresponds to multiplicative error at the input, regardless of input level.

Total Error

Total error (TE) is defined as the deviation of the output voltage, V_{LOGV1}, from the ideal transfer function (see the *Transfer Function* section):

$$V_{LOGV1} = V_{IDEAL} \pm TE$$

Total error is a combination of the associated gain, input offset current, input bias current, output offset voltage, and transfer characteristic nonlinearity (log conformity) errors:

$$V_{LOGV2} = K(1 \pm \Delta K)\left[\log_{10}\left(\frac{I_{LOG} - I_{BIAS1}}{I_{REF} - I_{BIAS2}}\right) \pm 4\left(\pm V_{LC} \pm V_{OSOUT}\right)\right]$$

where V_{LC} and V_{OSOUT} are the log conformity and output offset voltages, respectively. Output offset is defined as the offset occurring at the output of the MAX4206 when equal currents are presented to I_{LOG} and I_{REF}. Because the MAX4206 is configured with a gain of K = 0.25V/decade, a 4 should multiply the ($\pm V_{LC} \pm V_{OSOUT}$) term, if V_{LC} and V_{OSOUT} were derived from this default configuration.

I_{BIAS1} and I_{BIAS2} are currents in the order of 20pA, significantly smaller than I_{LOG} and I_{REF}, and can therefore be eliminated:

$$V_{LOGV2} \cong K(1 \pm \Delta K)\left[\log_{10}\left(\frac{I_{LOG}}{I_{REF}}\right) \pm 4\left(\pm V_{LC} \pm V_{OSOUT}\right)\right]$$

Expanding this expression:

$$V_{LOGV2} \cong K\log_{10}\left(\frac{I_{LOG}}{I_{REF}}\right) \pm K\Delta K\log_{10}\left(\frac{I_{LOG}}{I_{REF}}\right) \pm 4K(1 \pm \Delta K)\left(\pm V_{LC} \pm V_{OSOUT}\right)$$

The first term of this expression is the ideal component of V_{LOGV1}. The remainder of the expression is the TE:

$$TE \cong \pm K\Delta K\log_{10}\left(\frac{I_{LOG}}{I_{REF}}\right) \pm 4K(1 \pm \Delta K)\left(\pm V_{LC} \pm V_{OSOUT}\right)$$

In the second term, one can generally remove the products relating to ΔK, because ΔK is generally much less than 1. Hence, a good approximation for TE is given by:

$$TE \cong \pm K\left[\Delta K\log_{10}\left(\frac{I_{LOG}}{I_{REF}}\right) \pm 4\left(\pm V_{LC} \pm V_{OSOUT}\right)\right]$$

As an example, consider the following situation:

Full-scale input = 5V

I_{LOG} = 100µA

I_{REF} = 100nA

K = 1 ±5% V/decade (note that the uncommitted amplifier is configured for a gain of 4)

V_{LC} = ±5mV (obtained from the *Electrical Characteristics* table)

V_{OSOUT} = ±2mV (typ)

T_A = +25°C

Substituting into the total error approximation,

$$TE \cong \pm (1V/decade)(0.05\log_{10}(100\mu A/100nA) \pm 4(\pm 5mV \pm 2mV) = \pm[0.15V \pm 4(\pm 7mV)]$$

As a worst case, one finds TE ≅ ±178mV or ±3.6% of full scale.

When expressed as a voltage, TE increases in proportion with an increase in gain as the contributing errors are defined at a specific gain. Calibration using a look-up table eliminates the effects of gain and output offset errors, leaving conformity error as the only factor contributing to total error. For further accuracy, consider temperature monitoring as part of the calibration process.

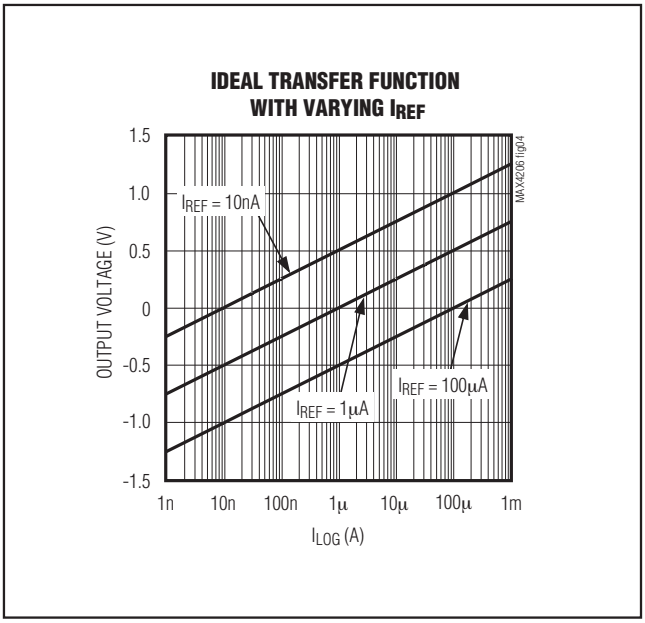

Figure 4. Ideal Transfer Function with Varying I_{REF}

Applications Information

Input Current Range

Five decades of input current across a 10nA to 1mA range are acceptable for I_{LOG} and I_{REF}. The effects of leakage currents increase as I_{LOG} and I_{REF} fall below 10nA. Bandwidth decreases at low I_{LOG} values (see the *Frequency Response and Noise Considerations* section). As I_{LOG} and I_{REF} increase to 1mA or higher, transistors become less logarithmic in nature. The MAX4206 incorporates leakage current compensation and high-current correction circuits to compensate for these errors.

Frequency Compensation

The MAX4206's frequency response is a function of the input current magnitude and the selected compensation network at LOGIIN and REFIIN. The compensation network comprised of C_{COMP} and R_{COMP} ensures stability over the specified range of input currents by introducing an additional pole/zero to the system. For the typical application, select C_{COMP} = 100pF and R_{COMP} = 100Ω. Where high bandwidth at low current is required, C_{COMP} = 32pF and R_{COMP} = 330Ω are suitable compensation values.

Frequency Response and Noise Considerations

The MAX4206 bandwidth is proportional to the magnitude of the I_{REF} and I_{LOG} currents, whereas the noise is inversely proportional to I_{REF} and I_{LOG} currents.

Common Mode

A common-mode input voltage, V_{CMVOUT}, of 0.5V is available at CMVOUT and can be used to bias the logging and reference amplifier inputs by connecting CMVOUT to CMVIN. An external voltage between 0.5V and 1V can be applied to CMVIN to bias the logging and reference transistor collectors and to optimize the performance required for both single- and dual-supply operation.

Adjusting the Logarithmic Intercept

Adjust the logarithmic intercept by changing the reference current, I_{REF}. A resistor from REFISET to GND (see Figures 5 and 6) adjusts the reference current, according to the following equation:

$$R_{SET} = \frac{V_{REFISET}}{10 \times I_{REF}}$$

where $V_{REFISET}$ is 0.5V. Select R_{SET} between 5kΩ and 5MΩ. REFIOUT current range is 10nA to 10µA only.

Single-Supply Operation

When operating from a single +2.7V to +11V supply, I_{LOG} must be greater than I_{REF}, resulting in a positive slope of the log output voltages, LOGV1 and LOGV2. Bias the log and reference amplifiers by connecting CMVOUT to CMVIN or connecting an external voltage reference between 0.5V and 1V to CMVIN. For single-supply operation, connect V_{EE} to GND.

Output Offset

Select R_{OS} and I_{OS} to adjust the output offset voltage (see Figure 5). The magnitude of the offset voltage is given by:

$$V_{OS} = R_{OS} \times I_{OSADJ}$$

Scale Factor

The scale factor, K, is the slope of the logarithmic output. For the LOGV1 amplifier, K = 0.25V/decade. When operating in a single-supply configuration, adjust the overall scale factor for the MAX4206 using the uncommitted LOGV2 amplifier and the following equation, which refers to Figure 5:

$$R2 = R1\left(\frac{K}{0.25} - 1\right)$$

Select R1 between 1kΩ and 100kΩ, with an ideal value of 10kΩ. The noninverting amplifier ensures that the overall scale factor is greater than or equal to 0.25V/decade for single-supply operation.

Design Example

Desired:

Single-Supply Operation

Logarithmic intercept: 100nA

Overall scale factor = 1V/decade

Because there is no offset current applied to the circuit (R_{OS} = 0Ω), the reference current, I_{REF}, equals the log intercept of 100µA. Therefore,

$$R_{SET} = \frac{0.5V}{10 \times 100nA} = 500k\Omega$$

Select R_1 = 10kΩ:

$$R2 = 10k\Omega\left(\frac{1V/V}{0.25} - 1\right) = 30k\Omega$$

Dual-Supply Operation

When operating from dual ±2.7 to ±5.5V supplies, it is not required that I_{LOG} be greater than I_{REF}. A positive output voltage results at LOGV1 when I_{LOG} exceeds I_{REF}. A negative output voltage results at LOGV1 when I_{LOG} is less than I_{REF}. Bias the log and reference amplifiers by connecting CMVOUT to CMVIN or connect an external 0.5V to 1V reference to CMVIN. For dual-supply operation with CMVIN < 0.5V, refer to the MAX4207 data sheet.

Output Offset

The uncommitted amplifier in the inverting configuration utilized by the MAX4206 facilitates large output-offset voltage adjustments when operated with dual supplies. The magnitude of the offset voltage is given by the following equation:

$$V_{OS} = V_{OSADJ}\left(1 + \frac{R_2}{R_1}\right)$$

A resistive divider between REFVOUT, OSADJ, and GND can be used to adjust V_{OSADJ} (see Figure 6).

$$V_{OSADJ} = V_{REFOUT}\left(\frac{R_4}{R_3 + R_4}\right)$$

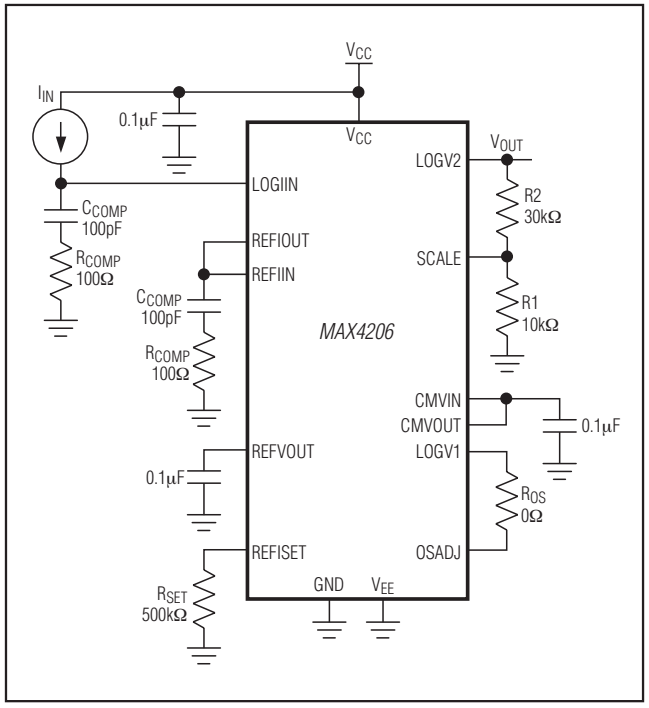

Figure 5. Single-Supply Typical Operating Circuit

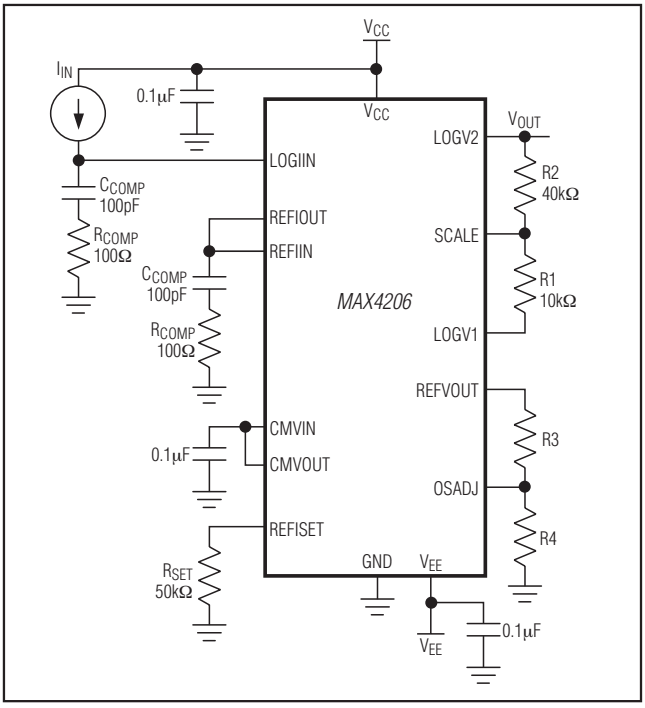

Figure 6. Dual-Supply Typical Operating Circuit

Scale Factor

The scale factor, K, is the slope of the logarithmic output. For the LOGV1 amplifier, K = 0.25V/decade. When operating from dual supplies, adjust the overall scale factor for the MAX4206 using the uncommitted LOGV2 amplifier and the following equation, which refers to Figure 6:

$$R_2 = R_1\left(\frac{K}{0.25}\right)$$

Select R_2 between 1kΩ and 100kΩ.

Design Example

Desired:

Dual-Supply Operation

Logarithmic intercept: 1µA

Overall scale factor = 1V/decade

$$R_{SET} = \frac{0.5V}{10 \times 1\mu A} = 50k\Omega$$

Select R_1 = 10kΩ:

$$R2 = 10k\Omega \times \left(\frac{1V/decade}{0.25}\right) = 40k\Omega$$

Measuring Optical Absorbance

A photodiode provides a convenient means of measuring optical power, as diode current is proportional to the incident optical power. Measure absolute optical power using a single photodiode connected at LOGIIN, with the MAX4206's internal current reference driving REFIIN. Alternatively, connect a photodiode to each of the MAX4206's logging inputs, LOGIIN and REFIIN, to measure relative optical power (Figure 7).

In absorbance measurement instrumentation, a reference light source is split into two paths. The unfiltered path is incident upon the photodiode of the reference channel, REFIIN. The other path passes through a sample of interest, with the resulting filtered light incident on the photodiode of the second channel, LOGIIN. The MAX4206 outputs provide voltages proportional to the log ratio of the two optical powers—an indicator of the optical absorbance of the sample.

In wavelength-locking applications, often found in fiberoptic communication modules, two photodiode currents provide a means of determining whether a given optical channel is tuned to the desired optical frequency. In this application, two bandpass optical filters with overlapping "skirts" precede each photodiode. With proper filter selection, the MAX4206 output can vary monotonically (ideally linearly) with optical frequency.

Photodiode Current Monitoring

Figure 8 shows the MAX4206 in a single-supply, optical-power measurement circuit, common in fiberoptic applications. The MAX4007 current monitor converts the sensed APD current to an output current that drives the MAX4206 LOGIIN input (APD current is scaled by 0.1). The MAX4007 also buffers the high-voltage APD voltages from the lower MAX4206 voltages. The MAX4206's internal current reference sources 10nA (R_{SET} = 5MΩ) to the REFIIN input. This configuration sets the logarithmic intercept to 10nA, corresponding to an APD current of 100nA. The unity-gain configuration of the output buffer maintains the 0.25V/decade gain present at the LOGV1 output.

Capacitive Loads

The MAX4206 drives capacitive loads of up to 50pF. Reactive loads decrease phase margin and can produce excessive ringing and oscillation. Use an isolation resistor in series with LOGV1 or LOGV2 to reduce the effect of large capacitive loads. Recall that the combination of the capacitive load and the small isolation resistor limits AC performance.

Power Dissipation

The LOGV1 and LOGV2 amplifiers are capable of sourcing or sinking in excess of 30mA. Ensure that the continuous power dissipation rating for the MAX4206 is not exceeded.

TQFN Package

The 16-lead thin QFN package has an exposed paddle that provides a heat-removal path, as well as excellent electrical grounding to the PC board. The MAX4206's exposed pad is internally connected to V_{EE}, and can either be connected to the PC board V_{EE} plane or left unconnected. Ensure that only V_{EE} traces are routed under the exposed paddle.

Layout and Bypassing

Bypass V_{CC} and V_{EE} to GND with ceramic 0.1µF capacitors. Place the capacitors as close to the device as possible. Bypass REFVOUT and/or CMVOUT to GND with a 0.1µF ceramic capacitor for increased noise immunity and a clean reference current. For low-current operation, it is recommended to use metal guard rings around LOGIIN, REFIIN, and REFISET. Connect this guard ring to CMVOUT.

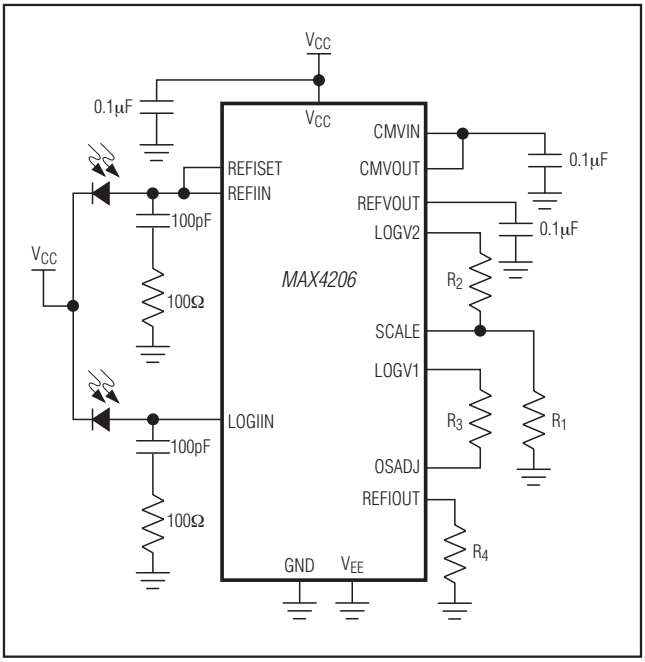

Figure 7. Measuring Optical Absorbance

Evaluation Kit

An evaluation kit is available for the MAX4206. The kit is flexible and can be configured for either single-supply or dual-supply operation. The scale factor and reference current are selectable. Refer to the MAX4206 Evaluation Kit data sheet for more information.

Chip Information

TRANSISTOR COUNT: 754

PROCESS: BiCMOS

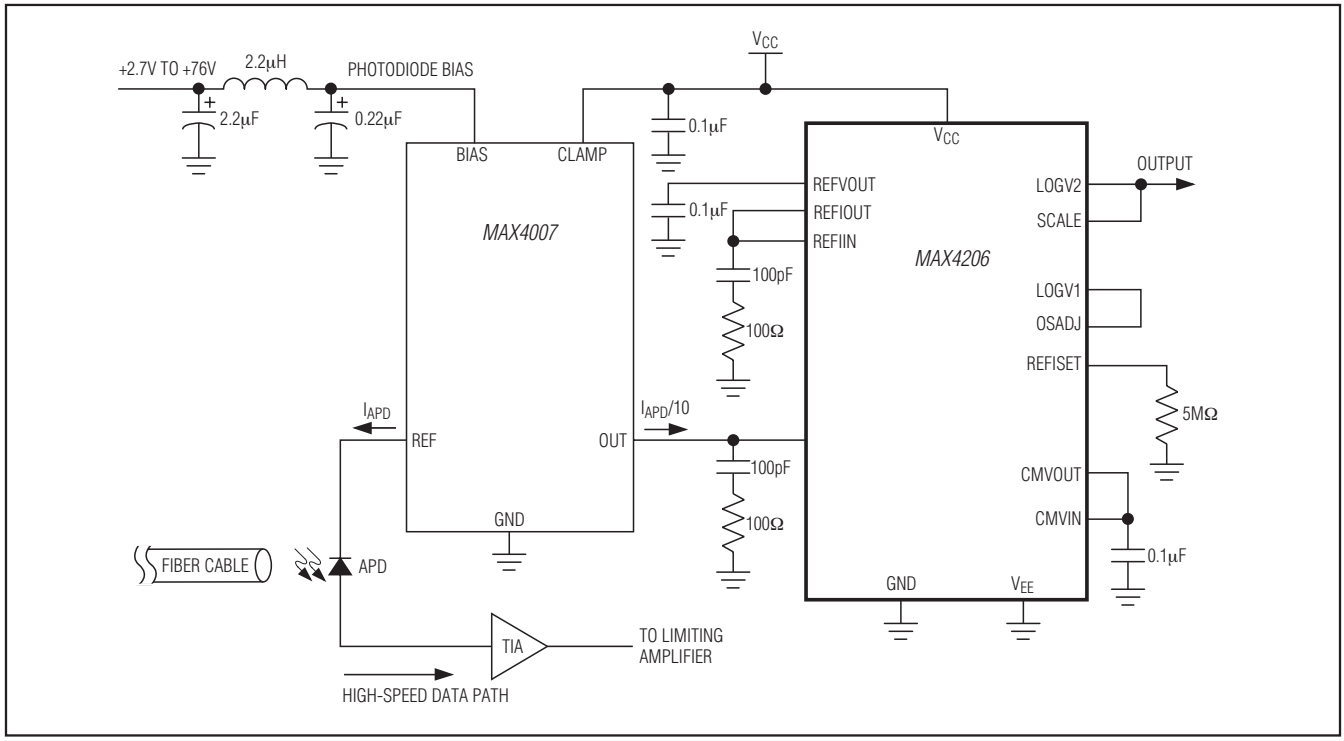

Figure 8. Logarithmic Current-Sensing Amplifier with Sourcing Input

Package Information

For the latest package outline information and land patterns (footprints), go to **www.maximintegrated.com/packages**. Note that a "+", "#", or "-" in the package code indicates RoHS status only. Package drawings may show a different suffix character, but the drawing pertains to the package regardless of RoHS status.

PACKAGE TYPE	PACKAGE CODE	OUTLINE NO.	LAND PATTERN NO.
16 TQFN-EP	T1644-4	21-0139	90-0070

Revision History

REVISION NUMBER	REVISION DATE	DESCRIPTION	PAGES CHANGED
2	5/15	Updated *Benefits and Features* section	1

For pricing, delivery, and ordering information, please contact Maxim Direct at 1-888-629-4642, or visit Maxim Integrated's website at www.maximintegrated.com.

Maxim Integrated cannot assume responsibility for use of any circuitry other than circuitry entirely embodied in a Maxim Integrated product. No circuit patent licenses are implied. Maxim Integrated reserves the right to change the circuitry and specifications without notice at any time. The parametric values (min and max limits) shown in the Electrical Characteristics table are guaranteed. Other parametric values quoted in this data sheet are provided for guidance.

Maxim Integrated and the Maxim Integrated logo are trademarks of Maxim Integrated Products, Inc. © 2015 Maxim Integrated Products, Inc.