19-1743; Rev 1; 2/01

MAXIM

Ultra-High PSRR Stereo Drivers + Microphone Amp + 100mA Linear Regulator

General Description

The MAX4298 and MAX4299 are audio system ICs designed for single +5V applications. The MAX4299 features a stereo headphone driver, a microphone amplifier, and a +3.3V linear regulator; the MAX4298 features the stereo headphone driver only. The MAX4298/ MAX4299 are designed specifically for harsh digital environments where board space is at a premium and the digital power supply is noisy. The design uses innovative design techniques to achieve ultra-high power-supply rejection across the audio signal band while, at the same time, delivering a high-current Rail-to-Rail® output drive capability. The chip is designed to drive highly capacitive loads that may be encountered when driving long cables to a remote load such as desktop/notebook headphones or speakers. These devices are fully compliant with PC99 standards.

The amplifiers exhibit 115dB of DC power-supply rejection and 80dB at 100kHz. The output amplifiers are capable of driving a $1.5V_{RMS}$ signal into a 10kΩ load with 0.0008% THD+N. They can also drive 32Ω headphones to $1.2V_{RMS}$ with 0.02% distortion. At +3.3V, the linear regulator can output 100mA of current. The MAX4298 is available in a tiny 10-pin µMAX while the MAX4299 is available in the space-saving 16-pin TSSOP package.

Applications

Notebook and Desktop Audio

Hands-Free Headsets

USB Audio Peripherals

IP Telephones

Wireless Internet Devices

MP3 Players/Recorders

Rail-to-Rail is a registered trademark of Nippon Motorola, Ltd.

Features

- ♦ **Audio System IC (MAX4299)**
  Ultra-High PSRR Stereo Headphone Driver
  Ultra-High PSRR Microphone Amp
  100mA, 3.3V Linear Regulator
- ♦ **93dB typ PSRR at 20kHz Operates Directly from Noisy Digital Supplies**
- ♦ **Clickless/Popless Power-Up, Power-Down, Mute and Unmute**
- ♦ **PC99-Compliant Output Drivers:**
  Better than $1V_{RMS}$ Output into 16Ω Load and $1.5V_{RMS}$ and 0.0008% THD+N into 10kΩ Load
- ♦ **PC99-Compliant Microphone Amplifier:**
  0.005% THD+N into 10kΩ Load
- ♦ **22nF Capacitive Load Drive Capability**
- ♦ **4.5V to 5.5V Single-Supply Operation**
- ♦ **Internally Generated Bias Voltage**
- ♦ **All Gains Externally Adjustable**
- ♦ **Available in Space-Saving Packages**
  10-Pin µMAX (MAX4298)
  16-Pin TSSOP (MAX4299)

Ordering Information

PART	TEMP. RANGE	PIN-PACKAGE
MAX4298EUB	-40°C to +85°C	10 µMAX
MAX4298ESD	-40°C to +85°C	14 SO
MAX4299EWP	-40°C to +85°C	20 SO
MAX4299EUE	-40°C to +85°C	16 TSSOP

Typical Operating Circuit appears at end of data sheet.

PSRR vs. Frequency

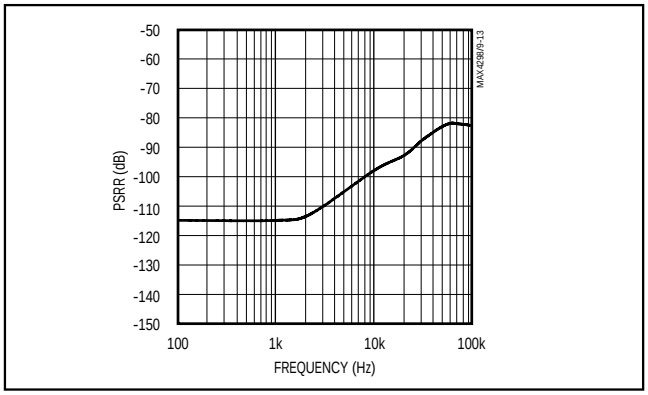

Pin Configurations

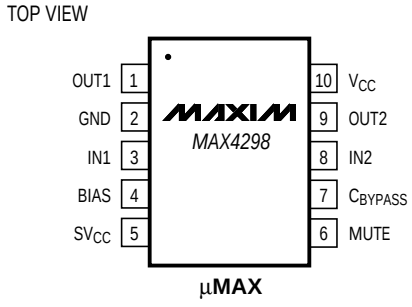

Pin Configurations continued at end of data sheet.

For price, delivery, and to place orders, please contact Maxim Distribution at 1-888-629-4642, or visit Maxim's website at www.maxim-ic.com.

ABSOLUTE MAXIMUM RATINGS

Supply Voltage (V_{CC}) to GND .....+6V
Standby Supply Voltage (SV_{CC}) to GND.....+6V
REG, FB, REGON to GND.....-0.3V to (V_{CC} + 0.3V)
BIAS, C_{BYPASS}, MUTE, IN_, MICIN to GND .....-0.3V to the Larger of (V_{CC} +0.3V) or (SV_{CC} +0.3V)
OUT_, MICOUT to GND.....-0.3V to the Smaller of +5.5V, or (V_{CC} + 0.3V)
Duration of Output Short-Circuit to GND or V_{CC} 10min

Continuous Power Dissipation
10-Pin µMAX (derate 5.6mW/°C above +70°C) 444mW
14-Pin SO (derate 8.3mW/°C above +70°C).....667mW
20-Pin SO (derate 10.0mW/°C above +70°C).....800mW
16-Pin TSSOP (derate 9.4mW/°C above +70°C) 755mW
Operating Temperature Range .....-40°C to +85°C
Storage Temperature Range.....-65°C to +150°C
Lead Temperature (soldering, 10s) .....+300°C

Stresses beyond those listed under "Absolute Maximum Ratings" may cause permanent damage to the device. These are stress ratings only, and functional operation of the device at these or any other conditions beyond those indicated in the operational sections of the specifications is not implied. Exposure to absolute maximum rating conditions for extended periods may affect device reliability.

ELECTRICAL CHARACTERISTICS

(V_{CC} = SV_{CC} = +5V, R_L = ∞ on all outputs, C_{BYPASS} = 1µF, C_{BIAS} = 1µF, C_{REG} = 10µF (MAX4299), T_A = T_{MIN} to T_{MAX}, unless otherwise noted. Load resistors (R_L) are terminated to 2.25V. Typical values are at T_A = +25°C. Specifications apply to both MAX4298 and MAX4299, unless otherwise noted.) (Note 1)

PARAMETER	SYMBOL	CONDITIONS	MIN	TYP	MAX	UNITS
Supply Voltage Range	V_{CC}	Inferred from PSRR test	4.5		5.5	V
Quiescent Current	I_{CC}	MAX4298		10.2	17.5	mA
		MAX4299		10.6	18.0	
Mute Quiescent Current		MAX4298		10.2	17.5	mA
		MAX4299		10.6	18.0	
SV_{CC} Current (Note 2)	I_{SVCC}	V_{BIAS} = 1.125V, V_{CC} = 0		300	500	µA
		V_{BIAS} = 2.25V, V_{CC} = 5.0V		7		
DRIVER AMPLIFIERS						
Input Offset Voltage	V_{OS}			±1	±10	mV
Input Bias Current	I_{BIAS}			0.2		nA
Power-Supply Rejection Ratio	PSRR	DC, V_{CC} = 4.5V to 5.5V		115		dB
		f = 20kHz		93		
		f = 100kHz		80		
Output Drive	V_{OUT}	R_L = 10kΩ	1.45	1.59		V_{RMS}
		R_L = 32Ω	1.2	1.53		
		R_L = 16Ω	1.0	1.48		
THD + Noise		A_V = -1V/V, f = 1kHz, R_L = 10kΩ, V_{OUT} = 1.5V_{RMS}		0.0008		%
		A_V = -1V/V, f = 1kHz, R_L = 32Ω, V_{OUT} = 1.2V_{RMS}, (Notes 3, 4)		0.02	0.1	
		A_V = -1V/V, f = 1kHz, R_L = 16Ω, V_{OUT} = 1.0V_{RMS}		0.04		
Full-Scale Signal-to-Noise Ratio (Note 4)	SNR	R_L = 10kΩ, V_{OUT} = 1.06V_{RMS}, A_V = -1V/V		105		dB
Capacitive Drive				22		nF
Open-Loop Voltage Gain	A_{VOL}	R_L = 32Ω, 0.55V ≤ V_{OUT} ≤ V_{CC} - 0.55V	76	87		dB
Unity-Gain Bandwidth	GBW			1.3		MHz

ELECTRICAL CHARACTERISTICS (continued)

(V_{CC} = SV_{CC} = +5V, R_L = ∞ on all outputs, C_{BYPASS} = 1µF, C_{BIAS} = 1µF, C_{REG} = 10µF (MAX4299), T_A = T_{MIN} to T_{MAX}, unless otherwise noted. Load resistors (R_L) are terminated to 2.25V. Typical values are at T_A = +25°C. Specifications apply to both MAX4298 and MAX4299, unless otherwise noted.) (Note 1)

PARAMETER	SYMBOL	CONDITIONS		MIN	TYP	MAX	UNITS
BIAS VOLTAGE OUTPUT							
DC BIAS Voltage	V_{BIAS}	I_L = 0		2.13	2.25	2.37	V
Line Regulation					120		dB
Load Regulation		I_L = 0 to 1µA			50		mV
DIGITAL INPUTS (MUTE for MAX4298/MAX4299, and REG_{ON} for MAX4299)							
Input Voltage High	V_{INH}			2.4			V
Input Voltage Low	V_{INL}					0.8	V
Input Leakage Current	I_{IN}	V_{IN} = 0 or V_{CC}				±1	µA
MICROPHONE AMPLIFIER (MAX4299 only)							
Input Offset Voltage	V_{OS}				±2	±10	mV
Input Bias Current	IBIAS				0.2		nA
Power-Supply Rejection Ratio	PSRR	DC, V_{CC} = 4.5V to 5.5V			115		dB
		f = 20kHz			93		
		f = 100kHz			80		
Voltage Gain	A_{VOL}	R_L = 10kΩ, 0.13V ≤ V_{MICOUT} ≤ V_{CC} - 0.13V		80	100		dB
Output Drive	V_{OUT}	R_L = 10kΩ		1.4	1.58		V_{RMS}
THD + Noise (Note 4)	THD+N	f = 1kHz, R_L = 10kΩ, V_{MICOUT} = 1.5V_{RMS}	A_V = -1V/V		0.005		%
			A_V = -10V/V		0.03		
Full-Scale Signal-to-Noise Ratio (Note 4)	SNR	R_L = 10kΩ, V_{MICOUT} = 1.06V_{RMS}, A_V = -10V/V			80		dB
All-Hostile Crosstalk		f = 10kHz (Note 5)			80		dB
Unity Gain Bandwidth	GBW				1		MHz
REGULATOR (MAX4299 only)							
Regulator Output Voltage	V_{REG}	V_{CC} = 4.5V to 5.5V. I_L = 0 to 100mA, using internal feedback		3.15	3.3	3.45	V
Line Regulation		V_{CC} = 4.5V to 5.5V, I_L = 50mA			0.2		mV
Load Regulation		I_L = 10mA to 100mA			30		mV
		I_L = 0 to 100mA			50		mV
FB Voltage	V_{FB}	Reference for regulator adjustment			1.233		V

Note 1: All devices are 100% production tested at T_A = +25°C. All temperature limits are guaranteed by design.
Note 2: Current drawn from SV_{CC} when V_{CC} < 4V.
Note 3: Guaranteed by design.
Note 4: Measurement bandwidth is 20Hz to 22kHz.
Note 5: Voltage at MICOUT with OUT1 = OUT2 = 1V_{RMS} into 32Ω.

Ultra-High PSRR Stereo Drivers + Microphone Amp + 100mA Linear Regulator

Typical Operating Characteristics

(V_{CC} = SV_{CC} = +5V, typical operating circuit, T_A = +25°C, unless otherwise noted.)

MAX4298
SUPPLY CURRENT vs. SUPPLY VOLTAGE

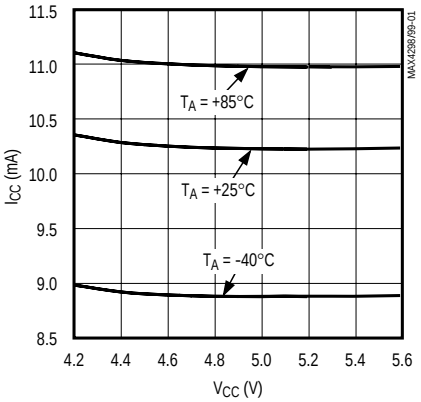

POWER-UP/POWER-DOWN

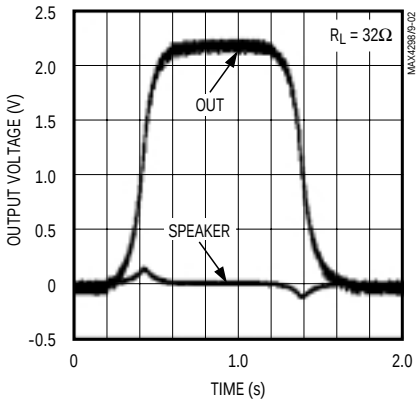

MUTE PERFORMANCE

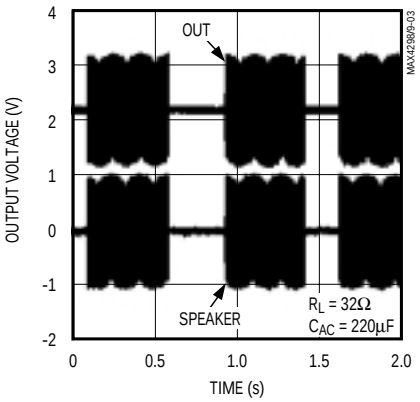

POWER-DOWN/POWER-UP with SCHOTTKY DIODE AND RESERVOIR CAPACITOR

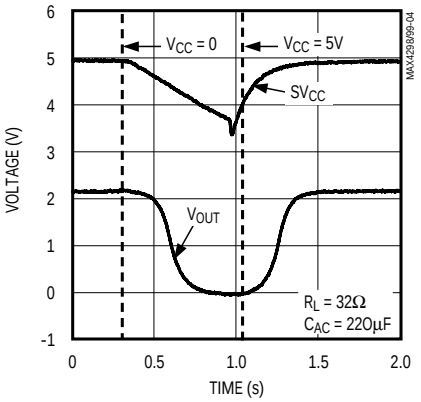

DRIVER OUT THD+N vs. FREQUENCY

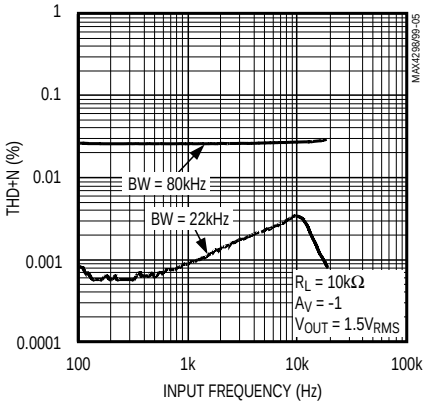

DRIVER OUT THD+N vs. FREQUENCY

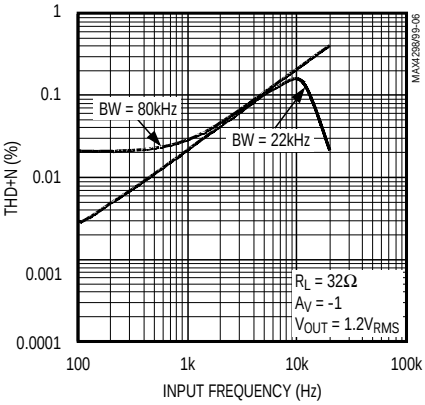

DRIVER OUT THD+N vs. FREQUENCY

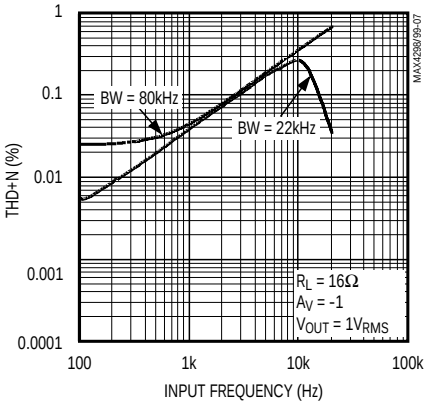

DRIVER OUT THD+N vs. AMPLITUDE

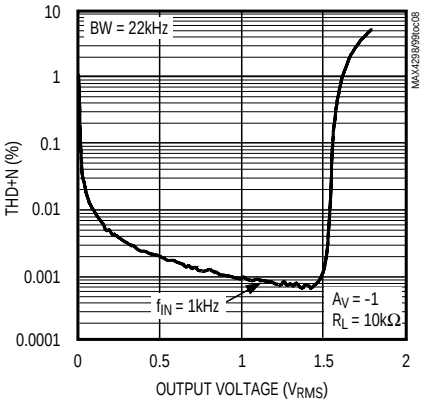

DRIVER OUT THD+N vs. AMPLITUDE

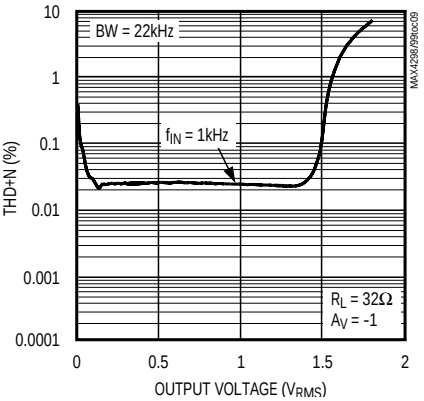

Typical Operating Characteristics (continued)

(V_{CC} = SV_{CC} = +5V, typical operating circuit, T_A = +25°C, unless otherwise noted.)

DRIVER OUT THD+N vs. AMPLITUDE

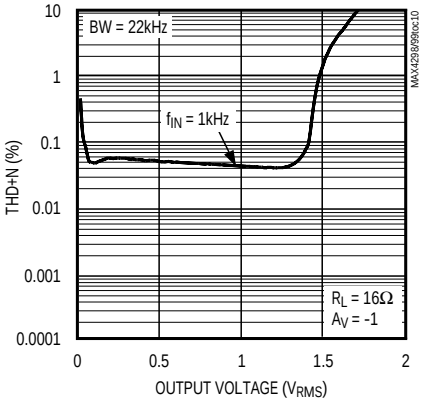

DRIVER OUT CHANNEL SEPARATION vs. INPUT FREQUENCY

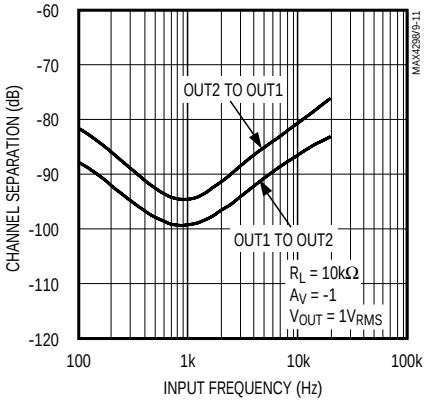

DRIVER OUT MUTED OUTPUT ATTENUATION vs. INPUT FREQUENCY

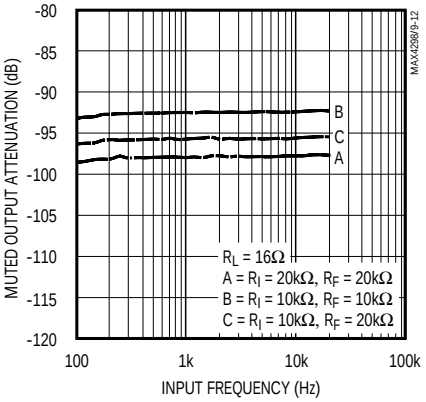

DRIVER OUT POWER-SUPPLY REJECTION RATIO vs. FREQUENCY

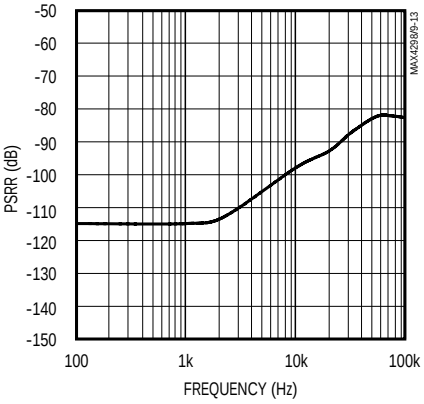

DRIVER OUT OPEN-LOOP FREQUENCY RESPONSE

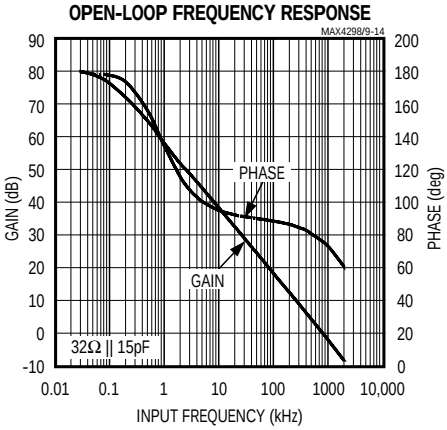

DRIVER OUT OPEN-LOOP FREQUENCY RESPONSE

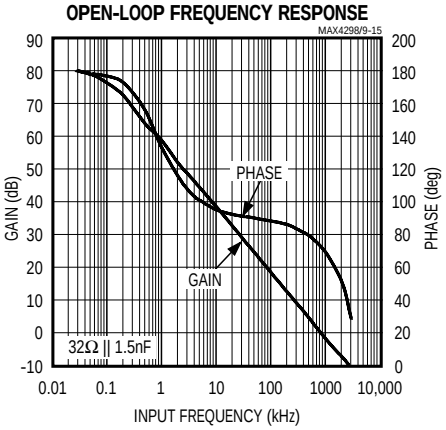

DRIVER OUT OPEN-LOOP FREQUENCY RESPONSE

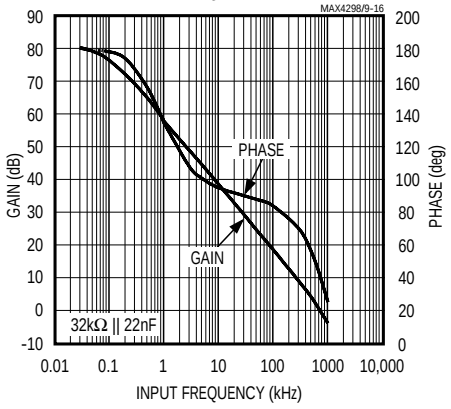

DRIVER OUT OPEN-LOOP FREQUENCY RESPONSE

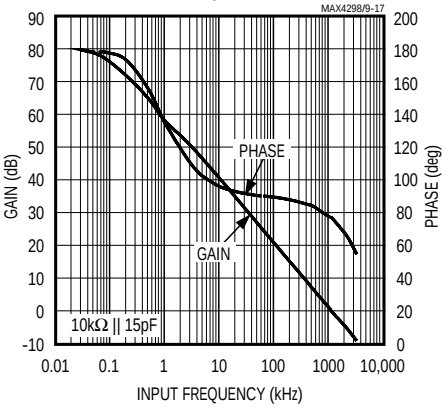

DRIVER OUT OPEN-LOOP FREQUENCY RESPONSE

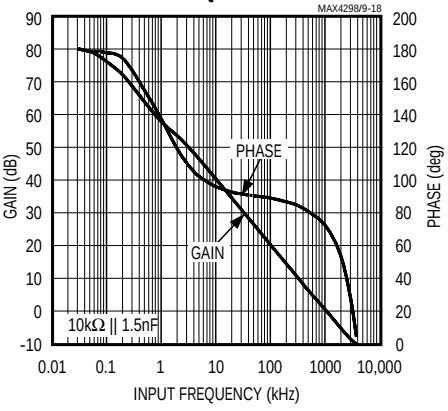

Ultra-High PSRR Stereo Drivers + Microphone Amp + 100mA Linear Regulator

Typical Operating Characteristics (continued)

(V_{CC} = SV_{CC} = +5V, typical operating circuit, T_A = +25°C, unless otherwise noted.)

DRIVER OUT OPEN-LOOP FREQUENCY RESPONSE

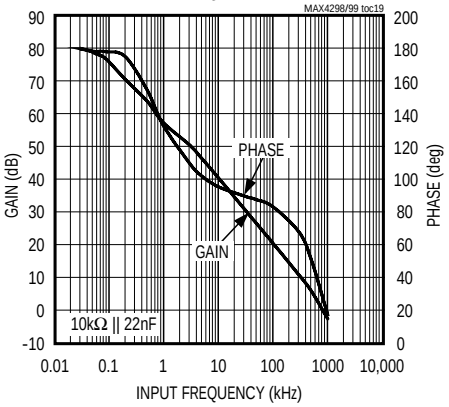

MICOUT ALL HOSTILE CROSSTLAK (INPUT REFERRED)

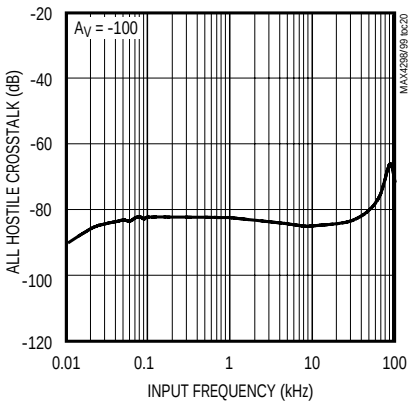

MICOUT OPEN LOOP FREQUENCY RESPONSE

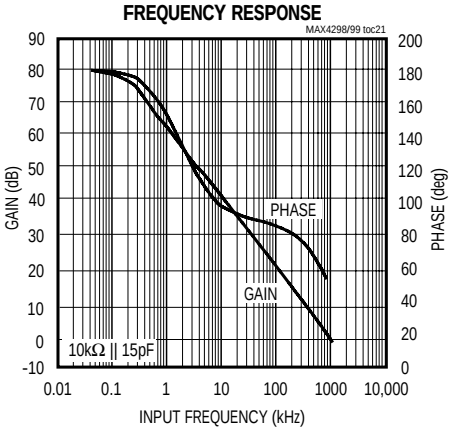

MICOUT OPEN LOOP FREQUENCY RESPONSE

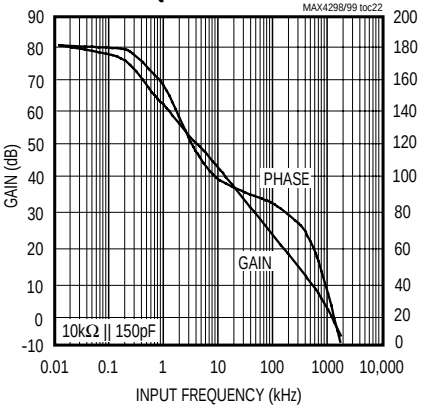

MICOUT THD+N vs. AMPLITUDE

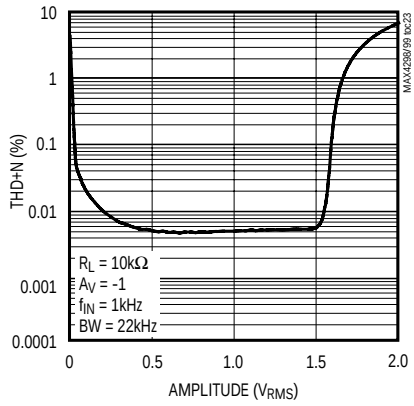

REGOUT OUTPUT VOLTAGE vs. LOAD CURRENT

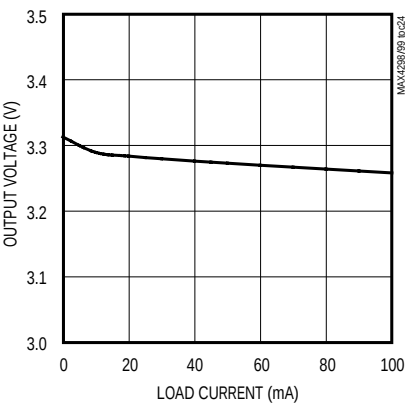

REGOUT TRANSIENT RESPONSE

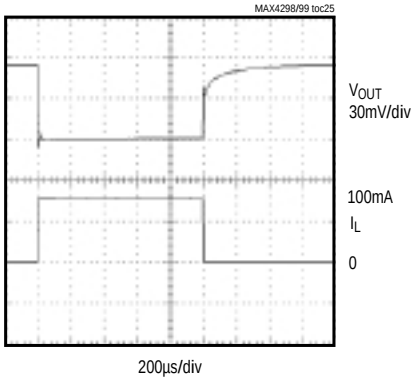

REGOUT TRANSIENT RESPONSE

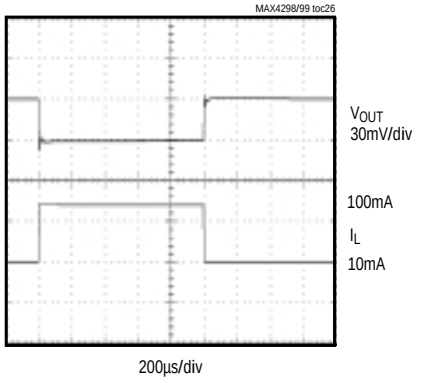

Pin Description

PIN				NAME	FUNCTION
MAX4298	MAX4298	MAX4299	MAX4299		
10-PIN μMAX	14-PIN SO	16-PIN TSSOP	20-PIN SO		
—	—	16	1	REG	Regulator Output. Bypass REG to GND with a 10μF capacitor.
—	—	1	2	FB	Regulator Feedback. Internal resistors from this point to REG and GND define the regulator output value. Adjustments can be made to the output value by adding resistors in the same place externally.
1	2	2	4	OUT1	Driver Amplifier Output
—	—	3	5	PGND	Power Ground for Driver Outputs
2	3	4	6	GND	Ground
3	4	5	7	IN1	Inverting Input for Driver Amplifier
4	5	6	8	BIAS	Bias Point for Amplifiers. Bypass BIAS to GND with a 1μF capacitor.
5	6	7	9	SV_{CC}	Standby Power Supply. Connect to a standby +5V supply that is always on, or bypass with 220μF and connect a Schottky diode from V_{CC} to SV_{CC}. Short to V_{CC} if clickless power-down is not essential.
—	—	8	10	MICOUT	Microphone Amplifier Output
—	—	9	11	MICIN	Inverting Input for Microphone Amplifier
6	9	10	13	MUTE	Mute Digital Input. Connect to GND for normal operation. When MUTE is connected to V_{CC}, OUT1 and OUT2 are muted, REG stays on, and MICOUT stays on.
7	10	11	14	C_{BYPASS}	Bypass to GND with a 1μF Capacitor
8	11	12	15	IN2	Inverting Input for Driver Amplifier
9	12	13	16	OUT2	Driver Amplifier Output
10	13	14	17	V_{CC}	Power Supply. Connect to +5V.
—	1, 7, 8, 14	—	3, 12, 18, 19	N.C.	No Connection. Not internally connected.
—	—	15	20	REGON	Regulator Control. Connect to V_{CC} for normal operation. Connect to GND to shut off the regulator.

Detailed Description

The MAX4298/MAX4299 are audio system ICs designed for single +5V applications. The MAX4299 has a stereo headphone driver, a microphone amplifier, and a 100mA +3.3V linear regulator; the MAX4298 has the stereo headphone driver only. The MAX4298/MAX4299 are designed specifically for harsh digital environments where board space is at a premium and the digital power supply is noisy. The design uses innovative design techniques to achieve ultra-high power-supply rejection across the audio signal band while, at the same time, delivering a high current rail-to-rail output drive capability. These devices are designed to drive highly capacitive loads that may be encountered when driving long cables to a remote load such as desktop/notebook headphones or speakers. They are fully compliant to PC99 standards. Figure 1 is the

Ultra-High PSRR Stereo Drivers + Microphone Amp + 100mA Linear Regulator

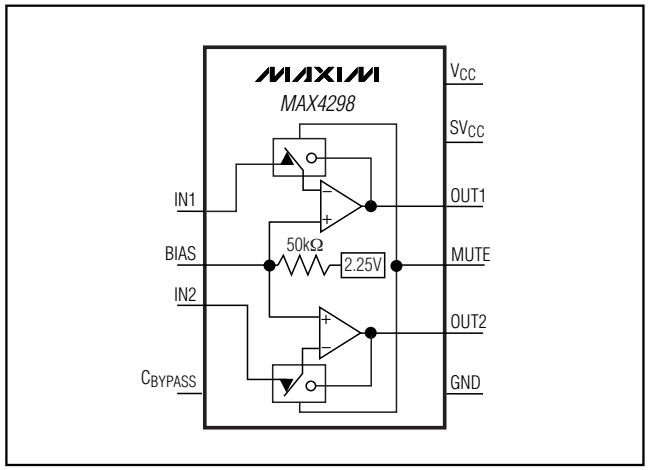

Figure 1. MAX4298 Block Diagram

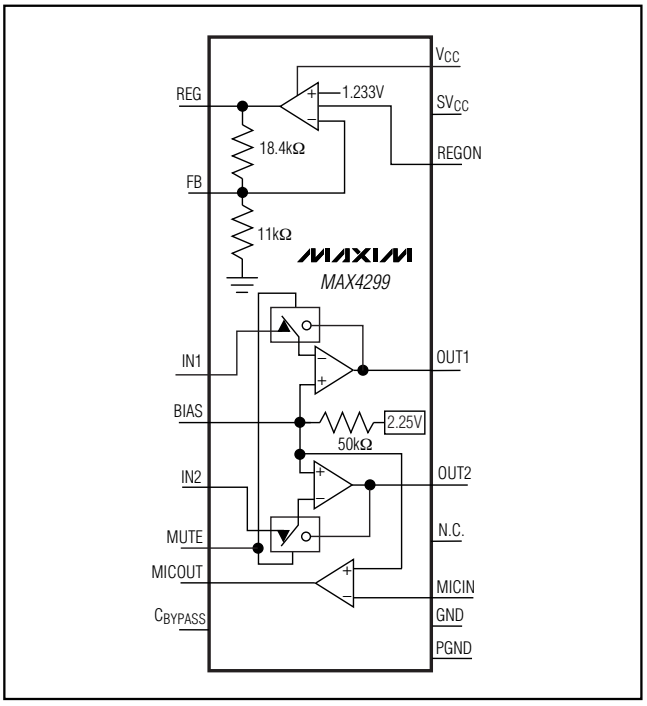

Figure 2. MAX4299 Block Diagram

The amplifiers exhibit better than 115dB of DC power-supply rejection and 93dB at 20kHz. The output amplifiers are capable of driving a $1.5V_{RMS}$ signal into 10kΩ load with 0.0008% distortion. They can also drive 32Ω headphones to $1.2V_{RMS}$ with 0.02% distortion. At +3.3V, the linear regulator can output 100mA of current.

BIAS

The common-mode bias point for the amplifiers is set to 2.25V by internal circuitry that has two functions. It provides a clickless/popless power-up/power-down waveform for the amplifiers. Also, it generates a ground-referenced bias voltage with ultra-high power-supply rejection ratio (PSRR). BIAS should be bypassed with 1µF to GND.The output impedance of the BIAS pin is 50kΩ.

Clickless/Popless Function

The MAX4298/MAX4299 are designed for high-fidelity audio performance into AC-coupled loads. The design techniques achieve a clickless/popless power-up sequence, and the use of a low-current standby supply (SV_{CC}) or external Schottky diode/reservoir capacitor combination allows clickless/popless power-down. A clickless/popless mute function is also provided to maintain a low impedance output when the input signal is switched off.

Mute Function

The MAX4298/MAX4299 have a MUTE pin that allows the user to mute the outputs of the device. This feature disconnects the input signal from the power amplifiers when a logic high is present at the MUTE pin. To ensure proper functionality, the MUTE pin should always be tied to either V_{CC} or GND. MUTE only affects the headphone driver outputs. REG, BIAS, and MICOUT are unaffected. OUT1 and OUT2 are muted, but remain in a low-impedance state to ensure clickless/popless operation.

SVCC

The MAX4298/MAX4299 provide a fully clickless power-down sequence. SV_{CC} normally should be connected to a low-current +5V power source, but alternatively can be connected with a reservoir capacitor to ground and a Schottky diode to V_{CC}. A reservoir capacitor of 220µF or higher provides enough charge for the clickless power-down sequence when C_{BIAS} = 1µF. For larger values of C_{BIAS}, increase the reservoir capacitor accordingly. Short to V_{CC} if clickless power-down is not needed.

Driver Amplifier

The headphone driver amplifier is a class AB amplifier designed to drive 16Ω loads. The amplifiers have innovative architectures for both the input and output stages to achieve ultra-high PSRR while maintaining rail-to-rail output drive capability. The output stage can drive high capacitive loads encountered when driving long cables used for desktop speakers or headphones.

Microphone Preamplifier (MAX4299)

The MAX4299 provides a microphone preamplifier that is a low-power version of the audio amplifier. It is intended to be used for low-level signal amplification. This microphone preamplifier provides rail-to-rail output with very high PSRR.

Regulator (MAX4299)

The MAX4299 also has an additional 100mA low-dropout (LDO) regulator to provide clean analog power for other sensitive analog circuitry on the PC board, such as a typical PC99 audio codec or microphone biasing. It is designed to provide good AC line regulation. The nominal output voltage of REG is 3.3V, and is adjustable between 1.2V and 4.5V by connecting a resistor-divider from REG to GND. Connect FB to the junction of the resistor-divider. The input impedance at FB is typically 7kΩ, which should be considered in output voltage calculations. REG should be bypassed to GND with at least 10µF.

Applications Information

Capacitor Selection and Regulator Stability

Normally, use a 10µF capacitor on REG (MAX4299 only) and a 1µF capacitor on C_{BYPASS}. Larger capacitor values and lower ESRs provide better supply-noise rejection and line-transient response. Reduce noise and improve load-transient response, stability, and power-supply rejection by using larger capacitors. For stable operation over the full temperature range and load currents up to 100mA, a minimum of 10µF (REG) and 1µF (C_{BYPASS}) is recommended.

Use a 1µF bypass capacitor on BIAS to ensure a fully clickless/popless power-up sequence. Smaller capacitor values may be used here to decrease the power-up time, but may cause the power-up transient to become audible. Larger bypass capacitors are not necessary to reduce noise and/or improve AC power-supply rejection.

SV_{CC} is the standby power supply. If using an external diode for charging, a 220µF reservoir capacitor on SV_{CC} provides standby power for the clickless power-down sequence. Smaller capacitors here may cause an audible output transient on power-down; 220µF or higher provides enough energy when C_{BIAS} = 1µF. For larger values of C_{BIAS}, increase the reservoir capacitor accordingly.

Mic Biasing (MAX4299)

Common microphone elements require resistive biasing to power their internal circuitry. A 2kΩ resistor is typically used, and the microphone is AC-coupled to the microphone amplifier. If the microphone element allows low-voltage operation, biasing to the REG output provides excellent power-supply rejection.

Power Supply and Bypassing

The excellent PSRR of the MAX4298/MAX4299 allows them to operate from noisy power supplies. In most applications, a 0.1µF capacitor from V_{CC} to GND is sufficient. This bypass capacitor should be placed close to the V_{CC} pin.

Layout

Good layout improves performance by decreasing the amount of stray capacitance and noise at the power amplifier's inputs and output. To decrease stray capacitance, minimize PC board trace lengths and resistor leads, and place external components as close to the pins as possible.

Power Dissipation

The first equation below indicates the maximum power dissipation point for a package that has two power amplifiers operating at identical known supply voltages and loads with sine wave inputs:

$$P_{IC(DISS)} = (V_{CC})^2 / (\pi^2 R_L) \quad [W]$$

For example, with a 5V power supply and a load of 16Ω, the maximum power dissipation of the amplifiers alone is 317mW.

The additional power dissipation due to the 100mA regulator operating at maximum current is nominally 170mW, but will increase if the output is reduced externally from its nominal 3.3V. The regulator power consumption is given by:

$$P_{REG} = (V_{CC} - V_{REG}) \times 100mA \quad [W]$$

To avoid thermal shutdown the sum of the regulator and amplifier power dissipation must not exceed the absolute maximum power-dissipation rating of the package.

Short-Circuit Protection and Thermal Shutdown

The MAX4298/MAX4299 have short-circuit current protection on all outputs. They also have a thermal shutdown function designed to protect the chip from junction temperatures in excess of +150°C that may arise from temporary short circuits or operation beyond the power dissipation limit of the package. The driver amplifier outputs limit at around ±220mA, the regulator at 150mA, and the microphone amplifier at +1.5mA/-12mA.

USB Applications

Universal serial bus (USB) interfaces are an increasingly popular method of interfacing medium-speed (up to 12Mbps) PC peripherals. One of the great benefits of the USB interface is the inclusion of a +5V supply. While this supply works well for a mouse or keyboard, its susceptibility for noise pickup can be unsuitable for high-fidelity audio applications. The MAX4298/MAX4299s' excellent PSRR make them ideal candidates for USB applications due to their insensitivity to the supply noise.

Of particular interest is an Internet-Protocol (IP) phone. This PC peripheral uses the local internet service provider as a free long-distance phone. The MAX4299, with its integral microphone amp, headphone driver, and linear regulator, can be a key element in the implementation of an IP phone that interfaces to the PC through the USB.

Ultra-High PSRR Stereo Drivers + Microphone Amp + 100mA Linear Regulator

Typical Operating Circuits

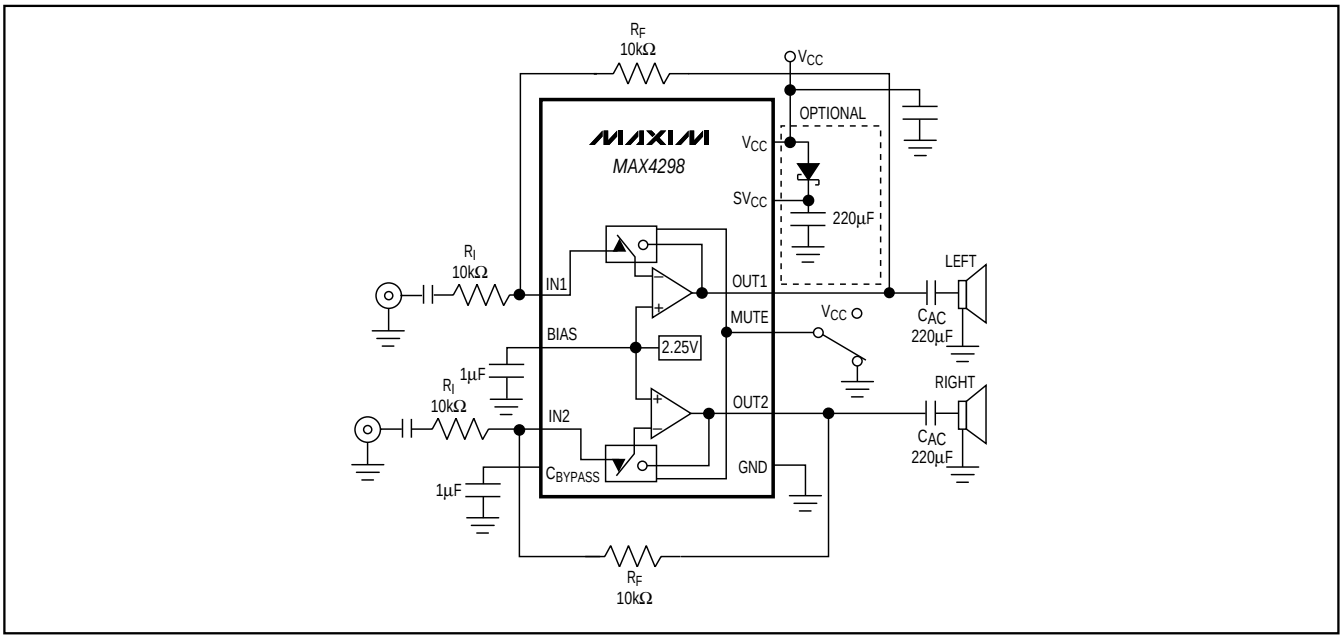

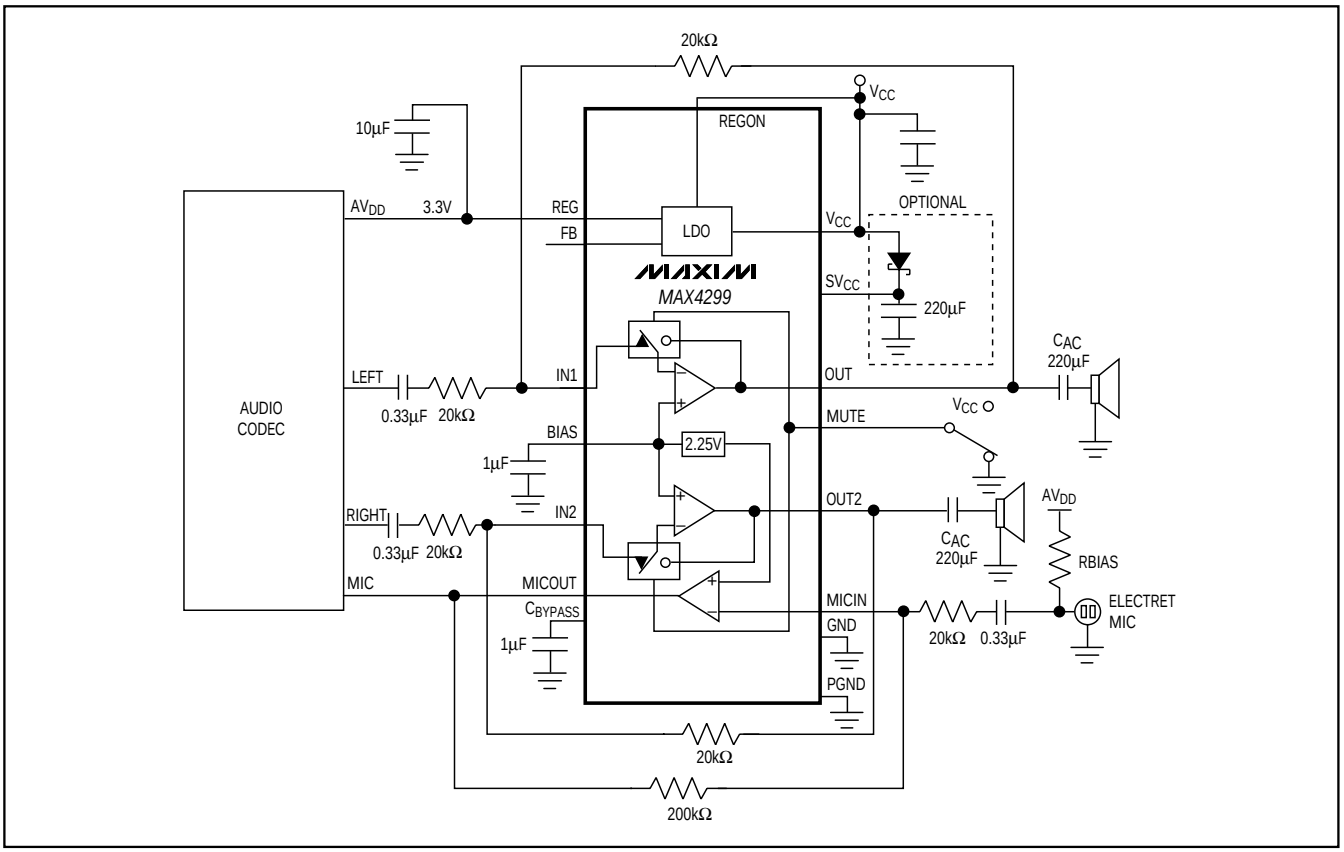

Pin Configurations (continued)

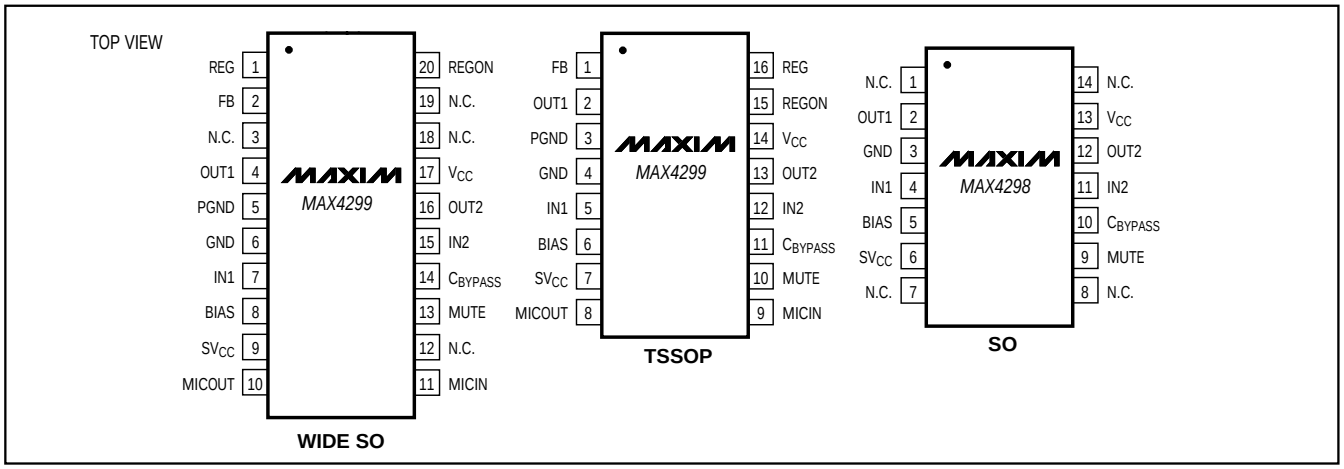

Chip Information

MAX4298 TRANSISTOR COUNT: 760

MAX4299 TRANSISTOR COUNT: 905

PROCESS: BiCMOS

Package Information

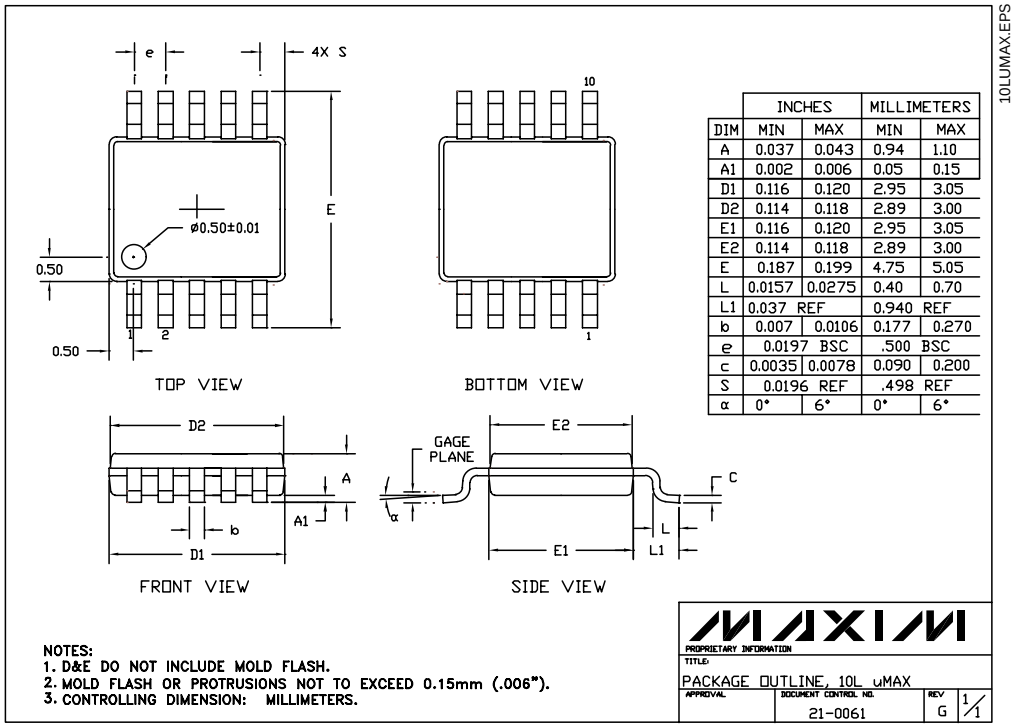

	INCHES		MILLIMETERS	
DIM	MIN	MAX	MIN	MAX
A	0.037	0.043	0.94	1.10
A1	0.002	0.006	0.05	0.15
D1	0.116	0.120	2.95	3.05
D2	0.114	0.118	2.89	3.00
E1	0.116	0.120	2.95	3.05
E2	0.114	0.118	2.89	3.00
E	0.187	0.199	4.75	5.05
L	0.0157	0.0275	0.40	0.70
L1	0.037 REF		0.940 REF	
b	0.007	0.0106	0.177	0.270
e	0.0197 BSC		.500 BSC	
c	0.0035	0.0078	0.090	0.200
S	0.0196 REF		.498 REF	
α	0°	6°	0°	6°

Ultra-High PSRR Stereo Drivers + Microphone Amp + 100mA Linear Regulator

Package Information (continued)

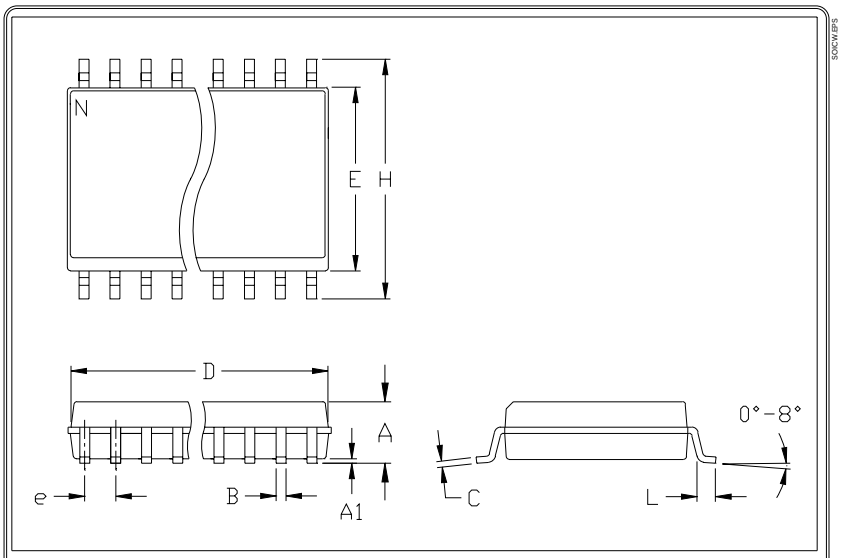

	INCHES		MILLIMETERS	
	MIN	MAX	MIN	MAX
A	0.093	0.104	2.35	2.65
A1	0.004	0.012	0.10	0.30
B	0.014	0.019	0.35	0.49
C	0.009	0.013	0.23	0.32
e	0.050		1.27	
E	0.291	0.299	7.40	7.60
H	0.394	0.419	10.00	10.65
h	0.010	0.030	0.25	0.75
L	0.016	0.050	0.40	1.27

	INCHES		MILLIMETERS			
	MIN	MAX	MIN	MAX	N	MS013
D	0.398	0.413	10.10	10.50	16	AA
D	0.447	0.463	11.35	11.75	18	AB
D	0.496	0.512	12.60	13.00	20	AC
D	0.598	0.614	15.20	15.60	24	AD
D	0.697	0.713	17.70	18.10	28	AE

NOTES:
1. D&E DO NOT INCLUDE MOLD FLASH
2. MOLD FLASH OR PROTRUSIONS NOT TO EXCEED .15mm (.006")
3. LEADS TO BE COPLANAR WITHIN .102mm (.004")
4. CONTROLLING DIMENSION: MILLIMETER
5. MEETS JEDEC MS013-XX AS SHOWN IN ABOVE TABLE
6. N = NUMBER OF PINS

MAXIM 120 SAN GABRIEL DR SUNNYVALE CA 94086 FAX (408) 737 7194 PROPRIETARY INFORMATION

TITLE: PACKAGE FAMILY OUTLINE: SOIC .300" | 1/1 | 21-0042 A (DOCUMENT CONTROL NUMBER REV.)

Package Information (continued)

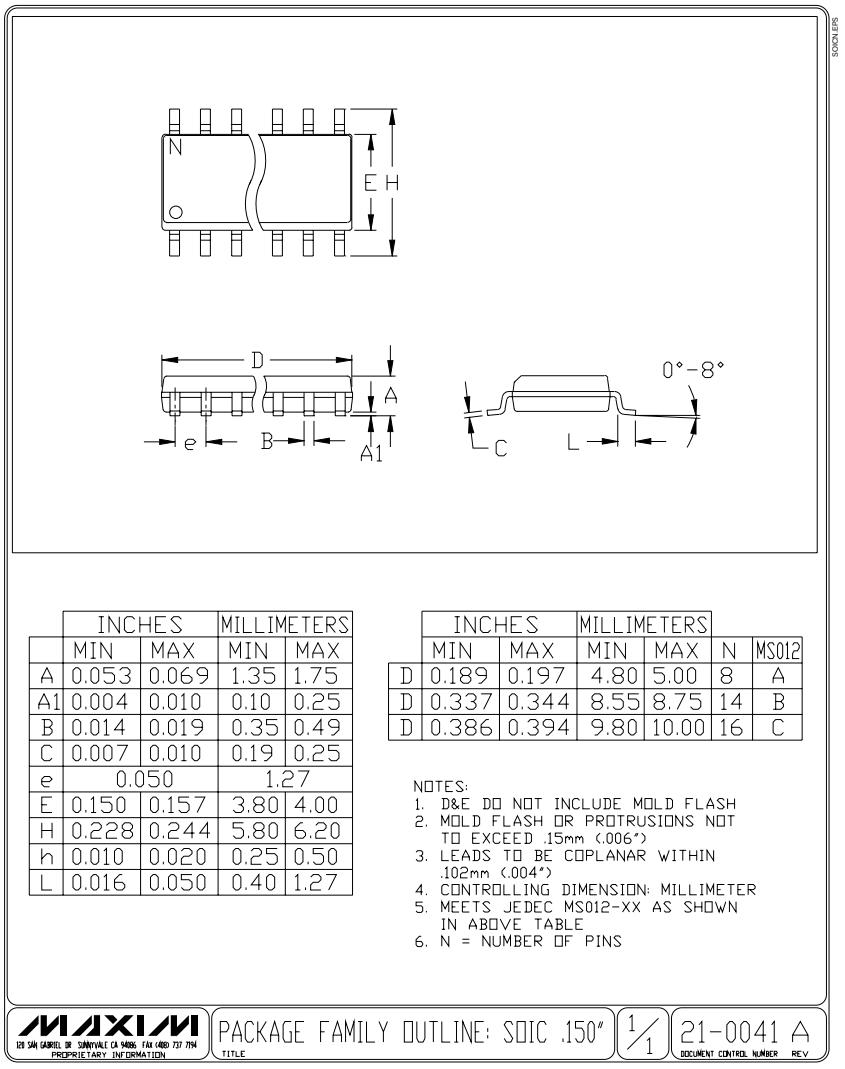

	INCHES		MILLIMETERS	
	MIN	MAX	MIN	MAX
A	0.053	0.069	1.35	1.75
A1	0.004	0.010	0.10	0.25
B	0.014	0.019	0.35	0.49
C	0.007	0.010	0.19	0.25
e	0.050		1.27	
E	0.150	0.157	3.80	4.00
H	0.228	0.244	5.80	6.20
h	0.010	0.020	0.25	0.50
L	0.016	0.050	0.40	1.27

	INCHES		MILLIMETERS			
	MIN	MAX	MIN	MAX	N	MS012
D	0.189	0.197	4.80	5.00	8	A
D	0.337	0.344	8.55	8.75	14	B
D	0.386	0.394	9.80	10.00	16	C

NOTES:
1. D&E DO NOT INCLUDE MOLD FLASH
2. MOLD FLASH OR PROTRUSIONS NOT TO EXCEED .15mm (.006")
3. LEADS TO BE COPLANAR WITHIN .102mm (.004")
4. CONTROLLING DIMENSION: MILLIMETER
5. MEETS JEDEC MS012-XX AS SHOWN IN ABOVE TABLE
6. N = NUMBER OF PINS

MAXIM 120 SAN GABRIEL DR SUNNYVALE CA 94086 FAX (408) 737 7194 PROPRIETARY INFORMATION

PACKAGE FAMILY OUTLINE: SOIC .150" TITLE

1/1

21-0041 A DOCUMENT CONTROL NUMBER REV

Ultra-High PSRR Stereo Drivers + Microphone Amp + 100mA Linear Regulator

Package Information (continued)

TSSOP,NO PADS.EPS

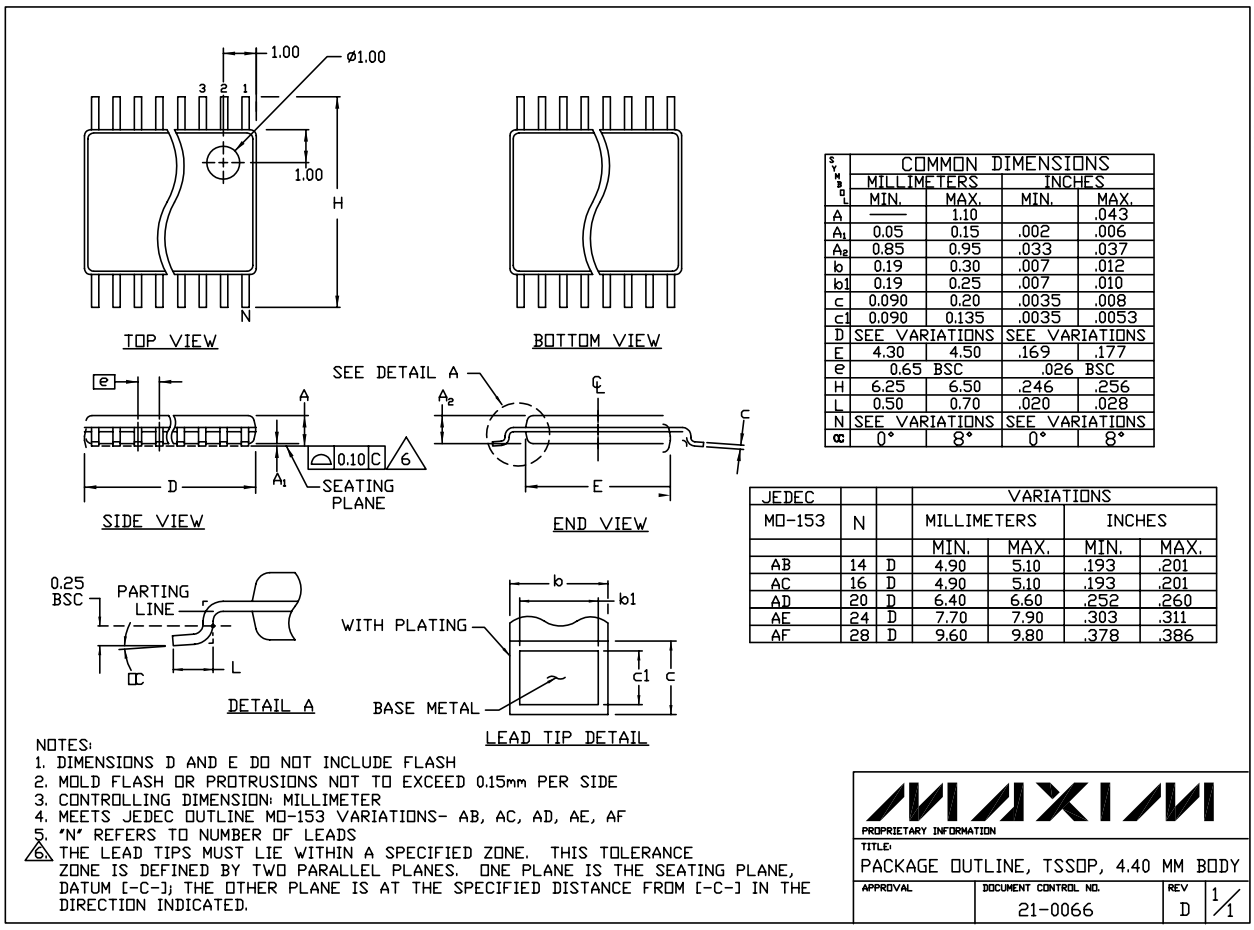

SYMBOL	COMMON DIMENSIONS			
	MILLIMETERS		INCHES	
	MIN.	MAX.	MIN.	MAX.
A	———	1.10		.043
A_1	0.05	0.15	.002	.006
A_2	0.85	0.95	.033	.037
b	0.19	0.30	.007	.012
b1	0.19	0.25	.007	.010
c	0.090	0.20	.0035	.008
c1	0.090	0.135	.0035	.0053
D	SEE VARIATIONS		SEE VARIATIONS	
E	4.30	4.50	.169	.177
e	0.65 BSC		.026 BSC	
H	6.25	6.50	.246	.256
L	0.50	0.70	.020	.028
N	SEE VARIATIONS		SEE VARIATIONS	
α	0°	8°	0°	8°

JEDEC			VARIATIONS			
MO-153	N		MILLIMETERS		INCHES	
			MIN.	MAX.	MIN.	MAX.
AB	14	D	4.90	5.10	.193	.201
AC	16	D	4.90	5.10	.193	.201
AD	20	D	6.40	6.60	.252	.260
AE	24	D	7.70	7.90	.303	.311
AF	28	D	9.60	9.80	.378	.386

NOTES:
1. DIMENSIONS D AND E DO NOT INCLUDE FLASH
2. MOLD FLASH OR PROTRUSIONS NOT TO EXCEED 0.15mm PER SIDE
3. CONTROLLING DIMENSION: MILLIMETER
4. MEETS JEDEC OUTLINE MO-153 VARIATIONS- AB, AC, AD, AE, AF
5. "N" REFERS TO NUMBER OF LEADS
6. THE LEAD TIPS MUST LIE WITHIN A SPECIFIED ZONE. THIS TOLERANCE ZONE IS DEFINED BY TWO PARALLEL PLANES. ONE PLANE IS THE SEATING PLANE, DATUM [-C-]; THE OTHER PLANE IS AT THE SPECIFIED DISTANCE FROM [-C-] IN THE DIRECTION INDICATED.

MAXIM
PROPRIETARY INFORMATION

TITLE: PACKAGE OUTLINE, TSSOP, 4.40 MM BODY

APPROVAL	DOCUMENT CONTROL NO.	REV	
	21-0066	D	1/1

Maxim cannot assume responsibility for use of any circuitry other than circuitry entirely embodied in a Maxim product. No circuit patent licenses are implied. Maxim reserves the right to change the circuitry and specifications without notice at any time.

© 2001 Maxim Integrated Products Printed USA MAXIM is a registered trademark of Maxim Integrated Products.