maxim integrated™

MAX481E/MAX483E/MAX485E/ MAX487E–MAX491E/MAX1487E

±15kV ESD-Protected, Slew-Rate-Limited, Low-Power, RS-485/RS-422 Transceivers

General Description

The MAX481E, MAX483E, MAX485E, MAX487E–MAX491E, and MAX1487E are low-power transceivers for RS-485 and RS-422 communications in harsh environments. Each driver output and receiver input is protected against ±15kV electro-static discharge (ESD) shocks, without latchup. These parts contain one driver and one receiver. The MAX483E, MAX487E, MAX488E, and MAX489E feature reduced slew-rate drivers that minimize EMI and reduce reflections caused by improperly terminated cables, thus allowing error-free data transmission up to 250kbps. The driver slew rates of the MAX481E, MAX485E, MAX490E, MAX491E, and MAX1487E are not limited, allowing them to transmit up to 2.5Mbps.

These transceivers draw as little as 120µA supply current when unloaded or when fully loaded with disabled drivers (see *Selector Guide*). Additionally, the MAX481E, MAX483E, and MAX487E have a low-current shutdown mode in which they consume only 0.5µA. All parts operate from a single +5V supply.

Drivers are short-circuit current limited, and are protected against excessive power dissipation by thermal shutdown circuitry that places their outputs into a high-impedance state. The receiver input has a fail-safe feature that guarantees a logic-high output if the input is open circuit.

The MAX487E and MAX1487E feature quarter-unit-load receiver input impedance, allowing up to 128 transceivers on the bus. The MAX488E–MAX491E are designed for full-duplex communications, while the MAX481E, MAX483E, MAX485E, MAX487E, and MAX1487E are designed for half-duplex applications. For applications that are not ESD sensitive see the pin- and function-compatible MAX481, MAX483, MAX485, MAX487–MAX491, and MAX1487.

Applications

Low-Power RS-485 Transceivers

Low-Power RS-422 Transceivers

Level Translators

Transceivers for EMI-Sensitive Applications

Industrial-Control Local Area Networks

Next-Generation Device Features

- **For Fault-Tolerant Applications:**
  MAX3430: ±80V Fault-Protected, Fail-Safe, 1/4-Unit Load, +3.3V, RS-485 Transceiver
  MAX3080–MAX3089: Fail-Safe, High-Speed (10Mbps), Slew-Rate-Limited, RS-485/RS-422 Transceivers
- **For Space-Constrained Applications:**
  MAX3460–MAX3464: +5V, Fail-Safe, 20Mbps, Profibus, RS-485/RS-422 Transceivers
  MAX3362: +3.3V, High-Speed, RS-485/RS-422 Transceiver in a SOT23 Package
  MAX3280E–MAX3284E: ±15kV ESD-Protected, 52Mbps, +3V to +5.5V, SOT23, RS-485/RS-422 True Fail-Safe Receivers
  MAX3030E–MAX3033E: ±15kV ESD-Protected, +3.3V, Quad RS-422 Transmitters
- **For Multiple Transceiver Applications:**
  MAX3293/MAX3294/MAX3295: 20Mbps, +3.3V, SOT23, RS-485/RS-422 Transmitters
- **For Fail-Safe Applications:**
  MAX3440E–MAX3444E: ±15kV ESD-Protected, ±60V Fault-Protected, 10Mbps, Fail-Safe RS-485/J1708 Transceivers
- **For Low-Voltage Applications:**
  MAX3483E/MAX3485E/MAX3486E/MAX3488E/ MAX3490E/MAX3491E: +3.3V Powered, ±15kV ESD-Protected, 12Mbps, Slew-Rate-Limited, True RS-485/RS-422 Transceivers

Ordering Information

PART	TEMP RANGE	PIN-PACKAGE
MAX481ECPA	0°C to +70°C	8 Plastic DIP
MAX481ECSA	0°C to +70°C	8 SO
MAX481EEPA	-40°C to +85°C	8 Plastic DIP
MAX481EESA	-40°C to +85°C	8 SO
MAX483ECPA	0°C to +70°C	8 Plastic DIP
MAX483ECSA	0°C to +70°C	8 SO
MAX483EEPA	-40°C to +85°C	8 Plastic DIP
MAX483EESA	-40°C to +85°C	8 SO

Ordering Information continued at end of data sheet.

Selector Guide appears at end of data sheet.

For pricing, delivery, and ordering information, please contact Maxim Direct at 1-888-629-4642, or visit Maxim's website at www.maximintegrated.com.

19-0410; Rev 4; 10/03

ABSOLUTE MAXIMUM RATINGS

Supply Voltage (V_{CC}) 12V
Control Input Voltage ($\overline{RE}$, DE) ..... -0.5V to (V_{CC} + 0.5V)
Driver Input Voltage (DI) ..... -0.5V to (V_{CC} + 0.5V)
Driver Output Voltage (Y, Z; A, B) ..... -8V to +12.5V
Receiver Input Voltage (A, B) ..... -8V to +12.5V
Receiver Output Voltage (RO) ..... -0.5V to (V_{CC} + 0.5V)
Continuous Power Dissipation (T_A = +70°C)
8-Pin Plastic DIP (derate 9.09mW/°C above +70°C) 727mW
14-Pin Plastic DIP (derate 10.00mW/°C above +70°C) ..800mW
8-Pin SO (derate 5.88mW/°C above +70°C) 471mW
14-Pin SO (derate 8.33mW/°C above +70°C) 667mW
Operating Temperature Ranges
MAX4_ _C_ _/MAX1487EC_ A ..... 0°C to +70°C
MAX4_ _E_ _/MAX1487EE_ A ..... -40°C to +85°C
Storage Temperature Range ..... -65°C to +160°C
Lead Temperature (soldering, 10sec) ..... +300°C

Stresses beyond those listed under "Absolute Maximum Ratings" may cause permanent damage to the device. These are stress ratings only, and functional operation of the device at these or any other conditions beyond those indicated in the operational sections of the specifications is not implied. Exposure to absolute maximum rating conditions for extended periods may affect device reliability.

DC ELECTRICAL CHARACTERISTICS

(V_{CC} = 5V ±5%, T_A = T_{MIN} to T_{MAX}, unless otherwise noted.) (Notes 1, 2)

PARAMETER	SYMBOL	CONDITIONS		MIN	TYP	MAX	UNITS
Differential Driver Output (no load)	V_{OD1}					5	V
Differential Driver Output (with load)	V_{OD2}	R = 50Ω (RS-422)		2			V
		R = 27Ω (RS-485), Figure 8		1.5		5	
Change in Magnitude of Driver Differential Output Voltage for Complementary Output States	ΔV_{OD}	R = 27Ω or 50Ω, Figure 8				0.2	V
Driver Common-Mode Output Voltage	V_{OC}	R = 27Ω or 50Ω, Figure 8				3	V
Change in Magnitude of Driver Common-Mode Output Voltage for Complementary Output States	ΔV_{OD}	R = 27Ω or 50Ω, Figure 8				0.2	V
Input High Voltage	V_{IH}	DE, DI, $\overline{RE}$		2.0			V
Input Low Voltage	V_{IL}	DE, DI, $\overline{RE}$				0.8	V
Input Current	I_{IN1}	DE, DI, $\overline{RE}$				±2	µA
Input Current (A, B)	I_{IN2}	DE = 0V; V_{CC} = 0V or 5.25V, all devices except MAX487E/MAX1487E	V_{IN} = 12V			1.0	mA
			V_{IN} = -7V			-0.8	
		MAX487E/MAX1487E, DE = 0V, V_{CC} = 0V or 5.25V	V_{IN} = 12V			0.25	mA
			V_{IN} = -7V			-0.2	
Receiver Differential Threshold Voltage	V_{TH}	-7V ≤ V_{CM} ≤ 12V		-0.2		0.2	V
Receiver Input Hysteresis	ΔV_{TH}	V_{CM} = 0V			70		mV
Receiver Output High Voltage	V_{OH}	I_O = -4mA, V_{ID} = 200mV		3.5			V
Receiver Output Low Voltage	V_{OL}	I_O = 4mA, V_{ID} = -200mV				0.4	V
Three-State (high impedance) Output Current at Receiver	I_{OZR}	0.4V ≤ V_O ≤ 2.4V				±1	µA
Receiver Input Resistance	R_{IN}	-7V ≤ V_{CM} ≤ 12V, all devices except MAX487E/MAX1487E		12			kΩ
		-7V ≤ V_{CM} ≤ 12V, MAX487E/MAX1487E		48			kΩ

DC ELECTRICAL CHARACTERISTICS (continued)

(V_{CC} = 5V ±5%, T_A = T_{MIN} to T_{MAX}, unless otherwise noted.) (Notes 1, 2)

PARAMETER	SYMBOL	CONDITIONS			MIN	TYP	MAX	UNITS
No-Load Supply Current (Note 3)	I_{CC}	MAX488E/MAX489E, DE, DI, $\overline{RE}$ = 0V or V_{CC}				120	250	µA
		MAX490E/MAX491E, DE, DI, $\overline{RE}$ = 0V or V_{CC}				300	500	
		MAX481E/MAX485E, $\overline{RE}$ = 0V or V_{CC}	DE = V_{CC}			500	900	
			DE = 0V			300	500	
		MAX1487E, $\overline{RE}$ = 0V or V_{CC}	DE = V_{CC}			300	500	
			DE = 0V			230	400	
		MAX483E/MAX487E, $\overline{RE}$ = 0V or V_{CC}	DE = V_{CC}	MAX483E		350	650	
				MAX487E		250	400	
			DE = 0V			120	250	
Supply Current in Shutdown	I_{SHDN}	MAX481E/483E/487E, DE = 0V, $\overline{RE}$ = V_{CC}				0.5	10	µA
Driver Short-Circuit Current, V_O = High	I_{OSD1}	-7V ≤ V_O ≤12V (Note 4)			35		250	mA
Driver Short-Circuit Current, V_O = Low	I_{OSD2}	-7V ≤ V_O ≤12V (Note 4)			35		250	mA
Receiver Short-Circuit Current	I_{OSR}	0V ≤ V_O ≤ V_{CC}			7		95	mA
ESD Protection		A, B, Y and Z pins, tested using Human Body Model				±15		kV

SWITCHING CHARACTERISTICS—MAX481E/MAX485E, MAX490E/MAX491E, MAX1487E

(V_{CC} = 5V ±5%, T_A = T_{MIN} to T_{MAX}, unless otherwise noted.) (Notes 1, 2)

PARAMETER	SYMBOL	CONDITIONS		MIN	TYP	MAX	UNITS
Driver Input to Output	t_{PLH}	Figures 10 and 12, R_{DIFF} = 54Ω, C_{L1} = C_{L2} = 100pF		10	40	60	ns
	t_{PHL}			10	40	60	
Driver Output Skew to Output	t_{SKEW}	Figures 10 and 12, R_{DIFF} = 54Ω, C_{L1} = C_{L2} = 100pF			5	10	ns
Driver Rise or Fall Time	t_R, t_F	Figures 10 and 12, R_{DIFF} = 54Ω, C_{L1} = C_{L2} = 100pF	MAX481E, MAX485E, MAX1487E	3	20	40	ns
			MAX490EC/E, MAX491EC/E	5	20	25	
Driver Enable to Output High	t_{ZH}	Figures 11 and 13, C_L = 100pF, S2 closed			45	70	ns
Driver Enable to Output Low	t_{ZL}	Figures 11 and 13, C_L = 100pF, S1 closed			45	70	ns
Driver Disable Time from Low	t_{LZ}	Figures 11 and 13, C_L = 15pF, S1 closed			45	70	ns
Driver Disable Time from High	t_{HZ}	Figures 11 and 13, C_L = 15pF, S2 closed			45	70	ns
Receiver Input to Output	t_{PLH}, t_{PHL}	Figures 10 and 14, R_{DIFF} = 54Ω, C_{L1} = C_{L2} = 100pF	MAX481E, MAX485E, MAX1487E	20	60	200	ns
			MAX490EC/E, MAX491EC/E	20	60	150	
| t_{PLH} - t_{PHL} | Differential Receiver Skew	t_{SKD}	Figures 10 and 14, R_{DIFF} = 54Ω, C_{L1} = C_{L2} = 100pF			5		ns
Receiver Enable to Output Low	t_{ZL}	Figures 9 and 15, C_{RL} = 15pF, S1 closed			20	50	ns
Receiver Enable to Output High	t_{ZH}	Figures 9 and 15, C_{RL} = 15pF, S2 closed			20	50	ns
Receiver Disable Time from Low	t_{LZ}	Figures 9 and 15, C_{RL} = 15pF, S1 closed			20	50	ns
Receiver Disable Time from High	t_{HZ}	Figures 9 and 15, C_{RL} = 15pF, S2 closed			20	50	ns
Maximum Data Rate	f_{MAX}			2.5			Mbps
Time to Shutdown	t_{SHDN}	MAX481E (Note 5)		50	200	600	ns

SWITCHING CHARACTERISTICS—MAX481E/MAX485E, MAX490E/MAX491E, MAX1487E (continued)

(V_{CC} = 5V ±5%, T_A = T_{MIN} to T_{MAX}, unless otherwise noted.) (Notes 1, 2)

PARAMETER	SYMBOL	CONDITIONS	MIN	TYP	MAX	UNITS
Driver Enable from Shutdown to Output High (MAX481E)	$t_{ZH(SHDN)}$	Figures 11 and 13, C_L = 100pF, S2 closed		45	100	ns
Driver Enable from Shutdown to Output Low (MAX481E)	$t_{ZL(SHDN)}$	Figures 11 and 13, C_L = 100pF, S1 closed		45	100	ns
Receiver Enable from Shutdown to Output High (MAX481E)	$t_{ZH(SHDN)}$	Figures 9 and 15, C_L = 15pF, S2 closed, A - B = 2V		225	1000	ns
Receiver Enable from Shutdown to Output Low (MAX481E)	$t_{ZL(SHDN)}$	Figures 9 and 15, C_L = 15pF, S1 closed, B - A = 2V		225	1000	ns

SWITCHING CHARACTERISTICS—MAX483E, MAX487E/MAX488E/MAX489E

(V_{CC} = 5V ±5%, T_A = T_{MIN} to T_{MAX}, unless otherwise noted.) (Notes 1, 2)

PARAMETER	SYMBOL	CONDITIONS	MIN	TYP	MAX	UNITS
Driver Input to Output	t_{PLH}	Figures 10 and 12, R_{DIFF} = 54Ω, C_{L1} = C_{L2} = 100pF	250	800	2000	ns
	t_{PHL}		250	800	2000	
Driver Output Skew to Output	t_{SKEW}	Figures 10 and 12, R_{DIFF} = 54Ω, C_{L1} = C_{L2} = 100pF		20	800	ns
Driver Rise or Fall Time	t_R, t_F	Figures 10 and 12, R_{DIFF} = 54Ω, C_{L1} = C_{L2} = 100pF	250		2000	ns
Driver Enable to Output High	t_{ZH}	Figures 11 and 13, C_L = 100pF, S2 closed	250		2000	ns
Driver Enable to Output Low	t_{ZL}	Figures 11 and 13, C_L = 100pF, S1 closed	250		2000	ns
Driver Disable Time from Low	t_{LZ}	Figures 11 and 13, C_L = 15pF, S1 closed	300		3000	ns
Driver Disable Time from High	t_{HZ}	Figures 11 and 13, C_L = 15pF, S2 closed	300		3000	ns
Receiver Input to Output	t_{PLH}	Figures 10 and 14, R_{DIFF} = 54Ω, C_{L1} = C_{L2} = 100pF	250		2000	ns
	t_{PHL}		250		2000	
$\lvert t_{PLH} - t_{PHL} \rvert$ Differential Receiver Skew	t_{SKD}	Figures 10 and 14, R_{DIFF} = 54Ω, C_{L1} = C_{L2} = 100pF		100		ns
Receiver Enable to Output Low	t_{ZL}	Figures 9 and 15, C_{RL} = 15pF, S1 closed		25	50	ns
Receiver Enable to Output High	t_{ZH}	Figures 9 and 15, C_{RL} = 15pF, S2 closed		25	50	ns
Receiver Disable Time from Low	t_{LZ}	Figures 9 and 15, C_{RL} = 15pF, S1 closed		25	50	ns
Receiver Disable Time from High	t_{HZ}	Figures 9 and 15, C_{RL} = 15pF, S2 closed		25	50	ns
Maximum Data Rate	f_{MAX}	t_{PLH}, t_{PHL} < 50% of data period	250			kbps
Time to Shutdown	t_{SHDN}	MAX483E/MAX487E (Note 5)	50	200	600	ns
Driver Enable from Shutdown to Output High	$t_{ZH(SHDN)}$	MAX483E/MAX487E, Figures 11 and 13, C_L = 100pF, S2 closed			2000	ns
Driver Enable from Shutdown to Output Low	$t_{ZL(SHDN)}$	MAX483E/MAX487E, Figures 11 and 13, C_L = 100pF, S1 closed			2000	ns
Receiver Enable from Shutdown to Output High	$t_{ZH(SHDN)}$	MAX483E/MAX487E, Figures 9 and 15, C_L = 15pF, S2 closed			2500	ns
Receiver Enable from Shutdown to Output Low	$t_{ZL(SHDN)}$	MAX483E/MAX487E, Figures 9 and 15, C_L = 15pF, S1 closed			2500	ns

NOTES FOR ELECTRICAL/SWITCHING CHARACTERISTICS

Note 1: All currents into device pins are positive; all currents out of device pins are negative. All voltages are referenced to device ground unless otherwise specified.

Note 2: All typical specifications are given for V_{CC} = 5V and T_A = +25°C.

Note 3: Supply current specification is valid for loaded transmitters when DE = 0V.

Note 4: Applies to peak current. See *Typical Operating Characteristics.*

Note 5: The MAX481E/MAX483E/MAX487E are put into shutdown by bringing $\overline{RE}$ high and DE low. If the inputs are in this state for less than 50ns, the parts are guaranteed not to enter shutdown. If the inputs are in this state for at least 600ns, the parts are guaranteed to have entered shutdown. See *Low-Power Shutdown Mode* section.

Typical Operating Characteristics

(V_{CC} = 5V, T_A = +25°C, unless otherwise noted.)

OUTPUT CURRENT vs. RECEIVER OUTPUT LOW VOLTAGE

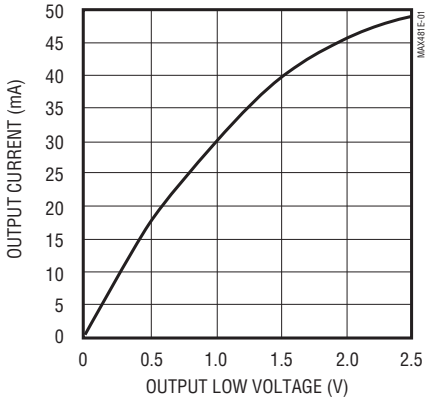

OUTPUT CURRENT vs. RECEIVER OUTPUT HIGH VOLTAGE

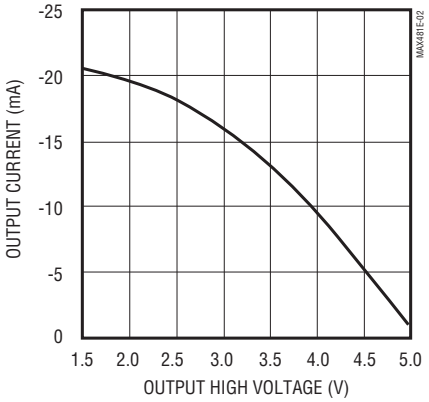

RECEIVER OUTPUT HIGH VOLTAGE vs. TEMPERATURE

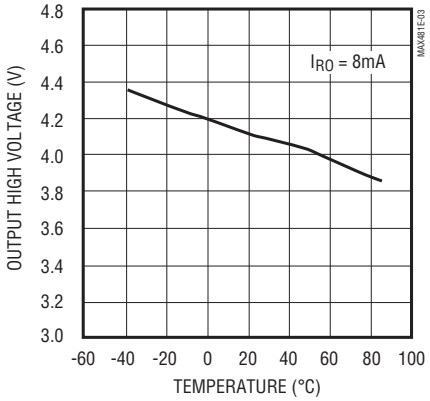

RECEIVER OUTPUT LOW VOLTAGE vs. TEMPERATURE

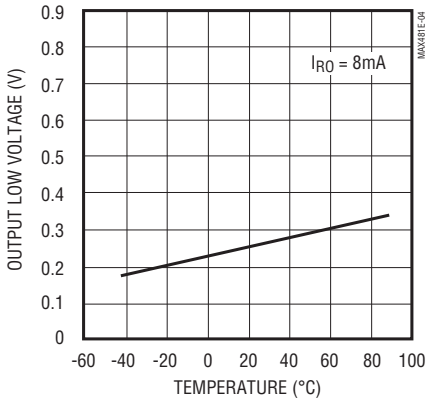

DRIVER OUTPUT CURRENT vs. DIFFERENTIAL OUTPUT VOLTAGE

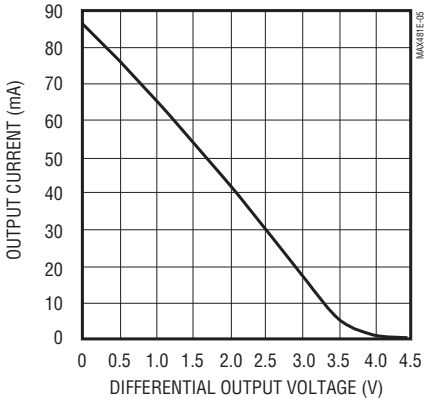

Typical Operating Characteristics (continued)

(V_{CC} = 5V, T_A = +25°C, unless otherwise noted.)

DRIVER DIFFERENTIAL OUTPUT VOLTAGE vs. TEMPERATURE

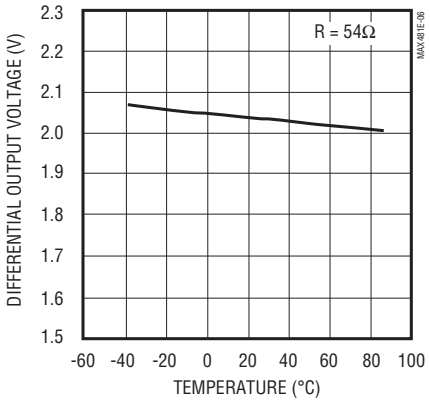

OUTPUT CURRENT vs. DRIVER OUTPUT LOW VOLTAGE

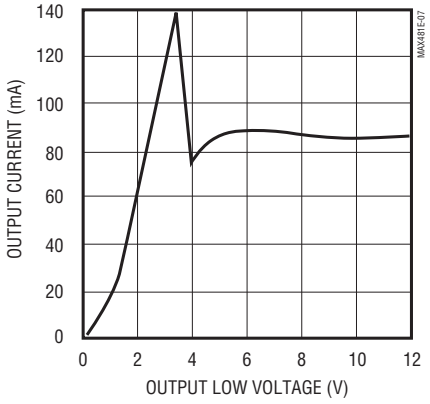

OUTPUT CURRENT vs. DRIVER OUTPUT HIGH VOLTAGE

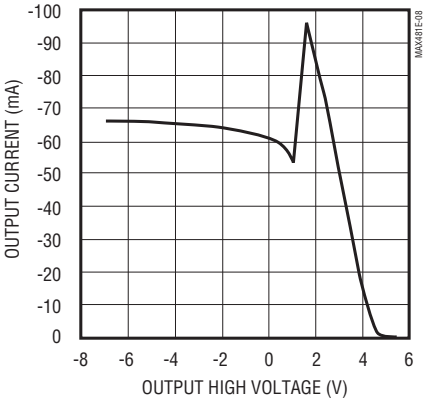

MAX481E/MAX485E/MAX490E/MAX491E SUPPLY CURRENT vs. TEMPERATURE

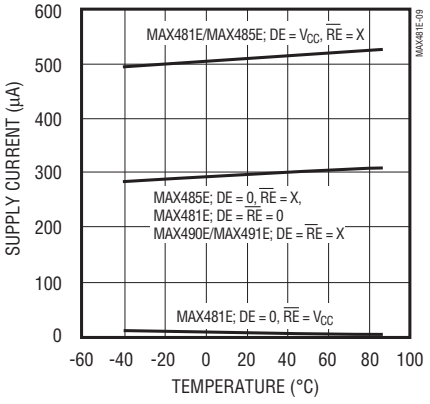

MAX483E/MAX487E–MAX489E SUPPLY CURRENT vs. TEMPERATURE

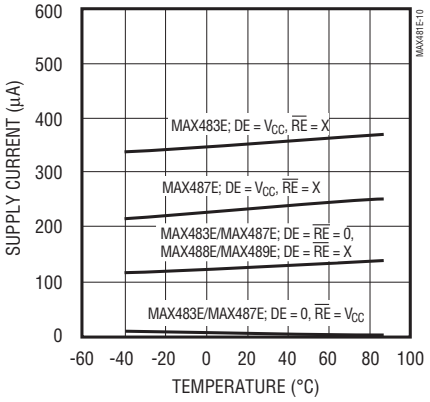

MAX1487E SUPPLY CURRENT vs. TEMPERATURE

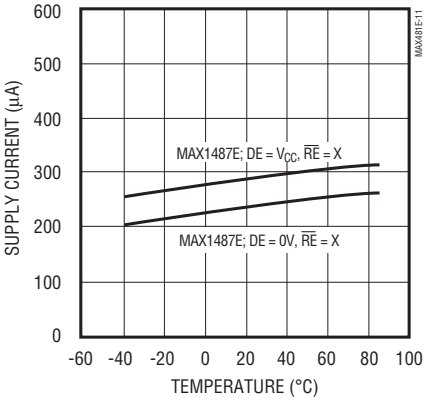

Pin Description

PIN			NAME	FUNCTION
MAX481E/MAX483E MAX485E/MAX487E MAX1487E	MAX488E MAX490E	MAX489E MAX491E		
1	2	2	RO	Receiver Output: If A > B by 200mV, RO will be high; If A < B by 200mV, RO will be low.
2	—	3	$\overline{RE}$	Receiver Output Enable. RO is enabled when $\overline{RE}$ is low; RO is high impedance when $\overline{RE}$ is high.
3	—	4	DE	Driver Output Enable. The driver outputs, Y and Z, are enabled by bringing DE high. They are high impedance when DE is low. If the driver outputs are enabled, the parts function as line drivers. While they are high impedance, they function as line receivers if $\overline{RE}$ is low.
4	3	5	DI	Driver Input. A low on DI forces output Y low and output Z high. Similarly, a high on DI forces output Y high and output Z low.
5	4	6, 7	GND	Ground
—	5	9	Y	Noninverting Driver Output
—	6	10	Z	Inverting Driver Output
6	—	—	A	Noninverting Receiver Input and Noninverting Driver Output
—	8	12	A	Noninverting Receiver Input
7	—	—	B	Inverting Receiver Input and Inverting Driver Output
—	7	11	B	Inverting Receiver Input
8	1	14	V_{CC}	Positive Supply: $4.75V \le V_{CC} \le 5.25V$
—	—	1, 8, 13	N.C.	No Connect—not internally connected

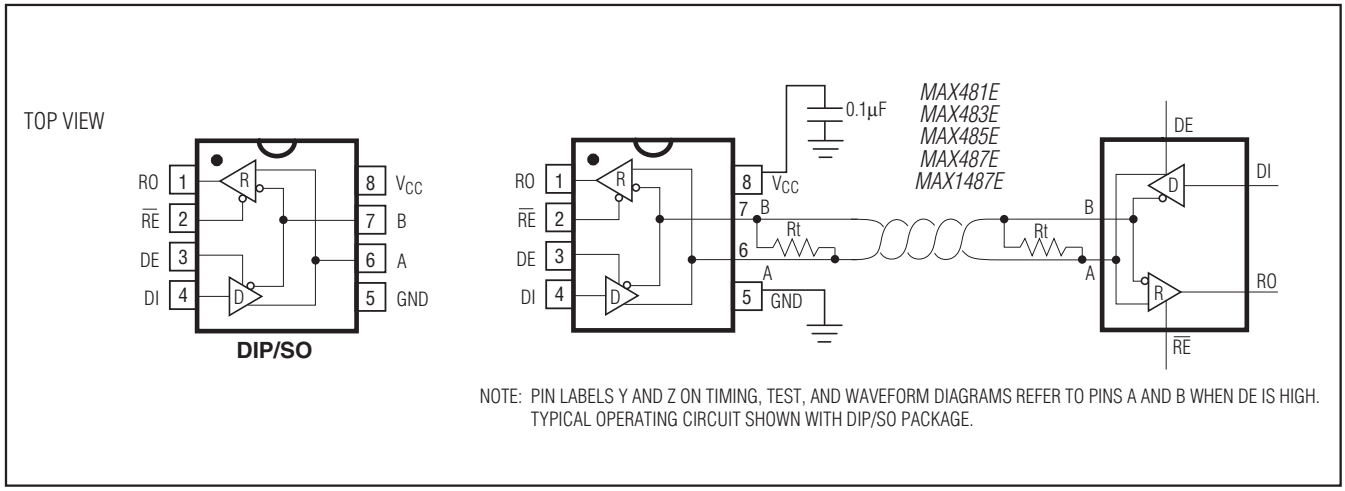

Figure 1. MAX481E/MAX483E/MAX485E/MAX487E/MAX1487E Pin Configuration and Typical Operating Circuit

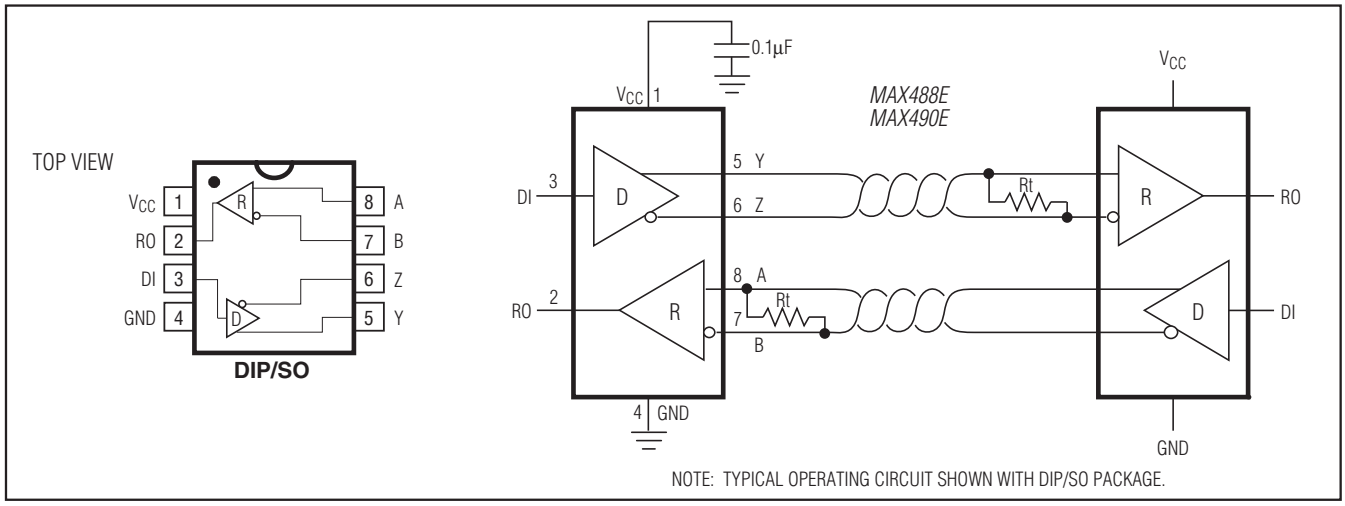

Figure 2. MAX488E/MAX490E Pin Configuration and Typical Operating Circuit

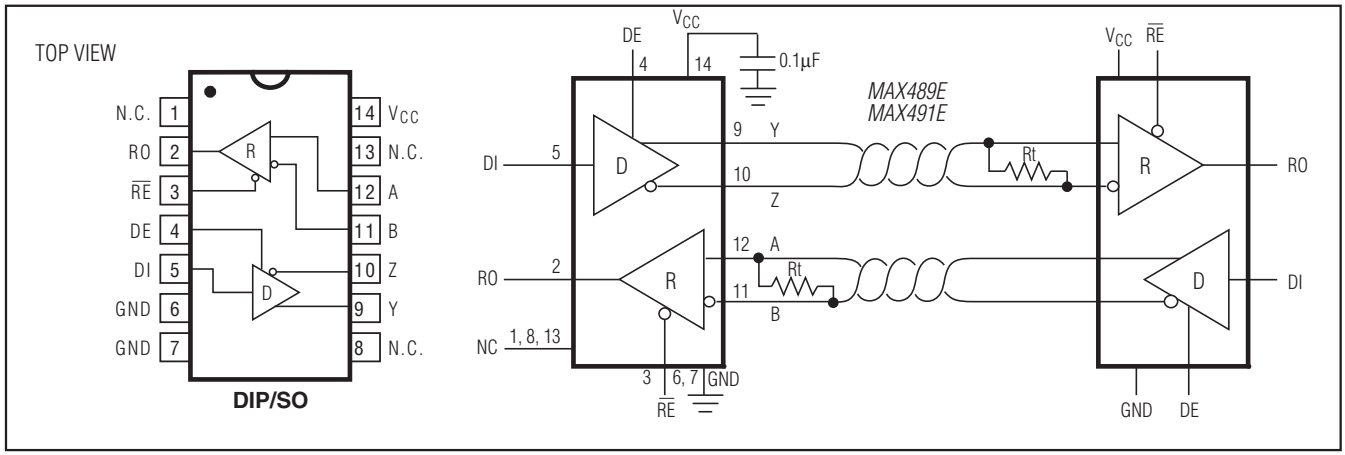

Figure 3. MAX489E/MAX491E Pin Configuration and Typical Operating Circuit

±15kV ESD-Protected, Slew-Rate-Limited, Low-Power, RS-485/RS-422 Transceivers

Function Tables (MAX481E/MAX483E/MAX485E/MAX487E/MAX1487E)

Table 1. Transmitting

INPUTS			OUTPUTS	
$\overline{RE}$	DE	DI	Z	Y
X	1	1	0	1
X	1	0	1	0
0	0	X	High-Z	High-Z
1	0	X	High-Z*	High-Z*

X = Don't care
High-Z = High impedance
* Shutdown mode for MAX481E/MAX483E/MAX487E

Table 2. Receiving

INPUTS			OUTPUT
$\overline{RE}$	DE	A-B	RO
0	0	≥ +0.2V	1
0	0	≤ -0.2V	0
0	0	Inputs open	1
1	0	X	High-Z*

X = Don't care
High-Z = High impedance
* Shutdown mode for MAX481E/MAX483E/MAX487E

Applications Information

The MAX481E/MAX483E/MAX485E/MAX487E–MAX491E and MAX1487E are low-power transceivers for RS-485 and RS-422 communications. These "E" versions of the MAX481, MAX483, MAX485, MAX487–MAX491, and MAX1487 provide extra protection against ESD. The rugged MAX481E, MAX483E, MAX485E, MAX497E–MAX491E, and MAX1487E are intended for harsh environments where high-speed communication is important. These devices eliminate the need for transient suppressor diodes and the associated high capacitance loading. The standard (non-"E") MAX481, MAX483, MAX485, MAX487–MAX491, and MAX1487 are recommended for applications where cost is critical.

The MAX481E, MAX485E, MAX490E, MAX491E, and MAX1487E can transmit and receive at data rates up to 2.5Mbps, while the MAX483E, MAX487E, MAX488E, and MAX489E are specified for data rates up to 250kbps. The MAX488E–MAX491E are full-duplex transceivers, while the MAX481E, MAX483E, MAX487E, and MAX1487E are half-duplex. In addition, driver-enable (DE) and receiver-enable (RE) pins are included on the MAX481E, MAX483E, MAX485E, MAX487E, MAX489E, MAX491E, and MAX1487E. When disabled, the driver and receiver outputs are high impedance.

±15kV ESD Protection

As with all Maxim devices, ESD-protection structures are incorporated on all pins to protect against electrostatic discharges encountered during handling and assembly. The driver outputs and receiver inputs have extra protection against static electricity. Maxim's engineers developed state-of-the-art structures to protect these pins against ESD of ±15kV without damage. The ESD structures withstand high ESD in all states: normal operation, shutdown, and powered down. After an ESD event, Maxim's MAX481E, MAX483E, MAX485E, MAX487E–MAX491E, and MAX1487E keep working without latchup.

ESD protection can be tested in various ways; the transmitter outputs and receiver inputs of this product family are characterized for protection to ±15kV using the Human Body Model.

Other ESD test methodologies include IEC10004-2 contact discharge and IEC1000-4-2 air-gap discharge (formerly IEC801-2).

ESD Test Conditions

ESD performance depends on a variety of conditions. Contact Maxim for a reliability report that documents test set-up, test methodology, and test results.

Human Body Model

Figure 4 shows the Human Body Model, and Figure 5 shows the current waveform it generates when discharged into a low impedance. This model consists of a 100pF capacitor charged to the ESD voltage of interest, which is then discharged into the test device through a 1.5kΩ resistor.

IEC1000-4-2

The IEC1000-4-2 standard covers ESD testing and performance of finished equipment; it does not specifically refer to integrated circuits (Figure 6).

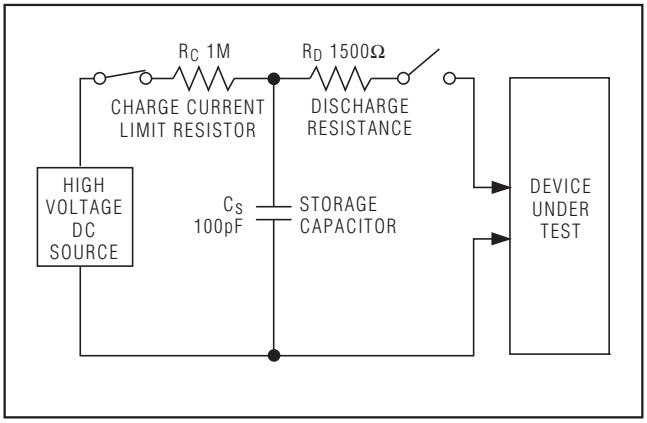

Figure 4. Human Body ESD Test Model

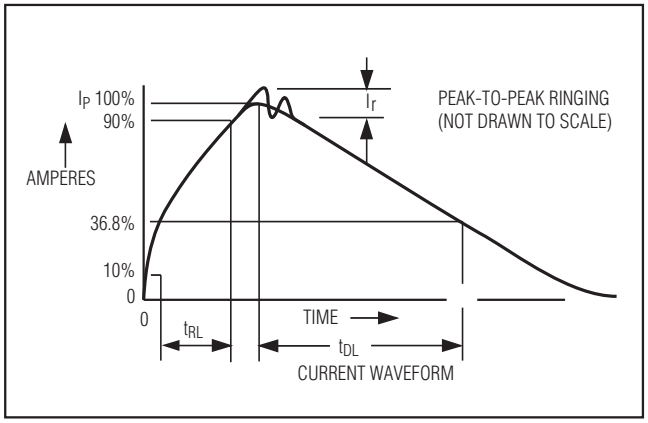

Figure 5. Human Body Model Current Waveform

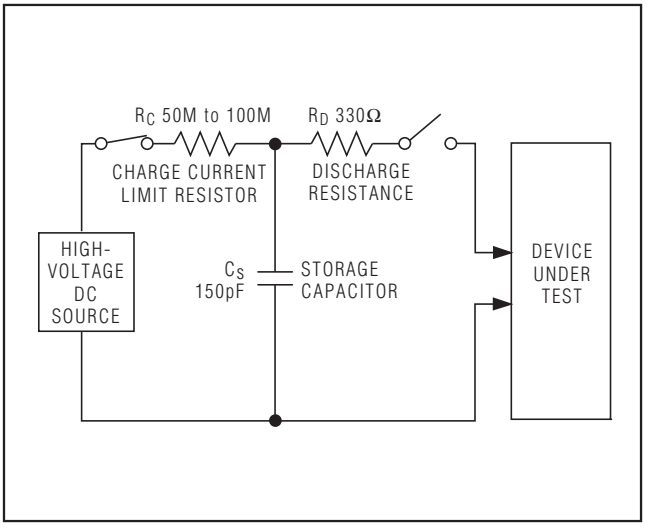

Figure 6. IEC1000-4-2 ESD Test Model

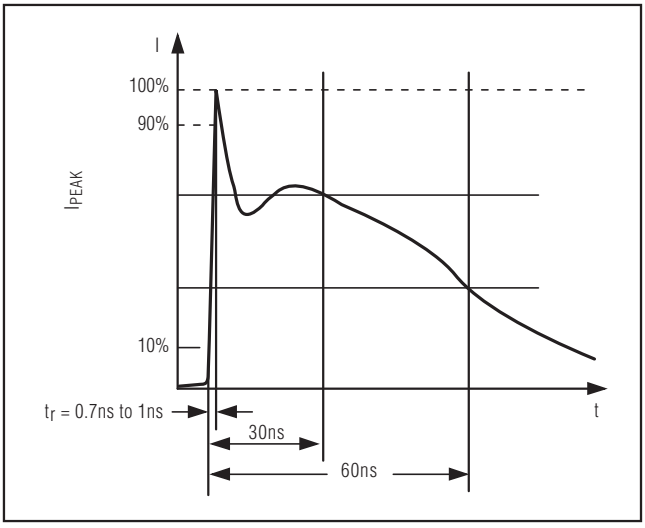

Figure 7. IEC1000-4-2 ESD Generator Current Waveform

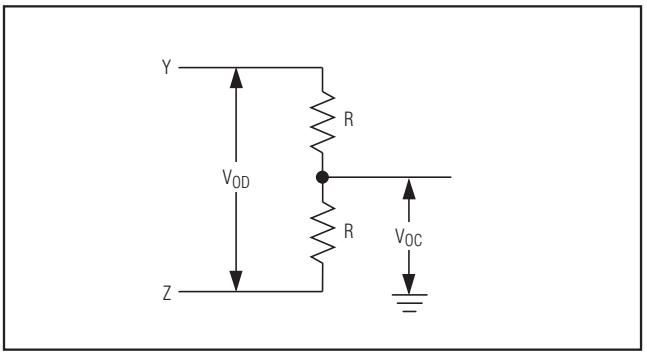

Figure 8. Driver DC Test Load

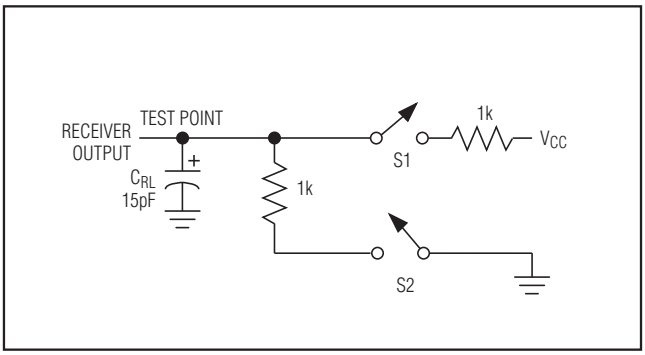

Figure 9. Receiver Timing Test Load

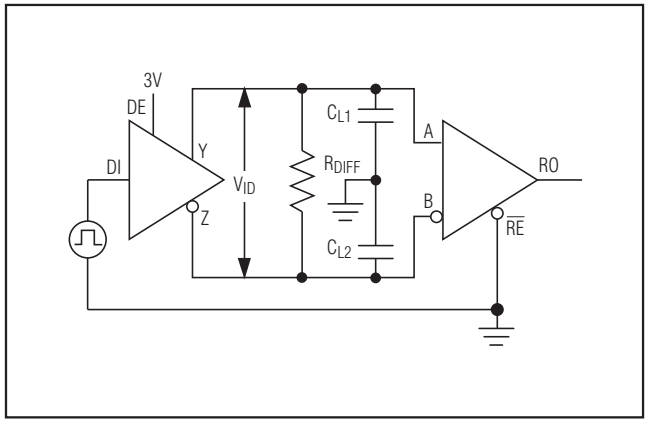

Figure 10. Driver/Receiver Timing Test Circuit

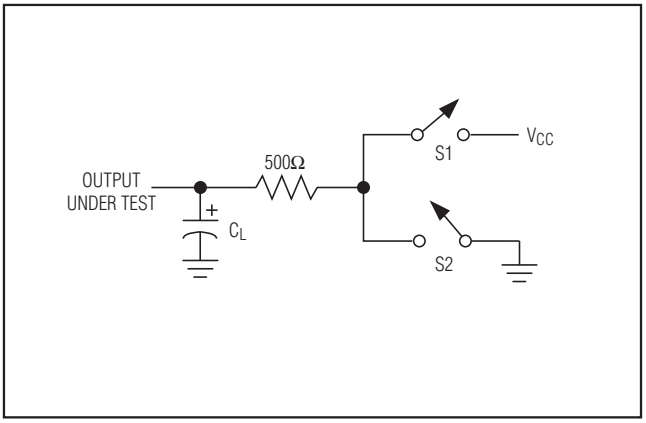

Figure 11. Driver Timing Test Load

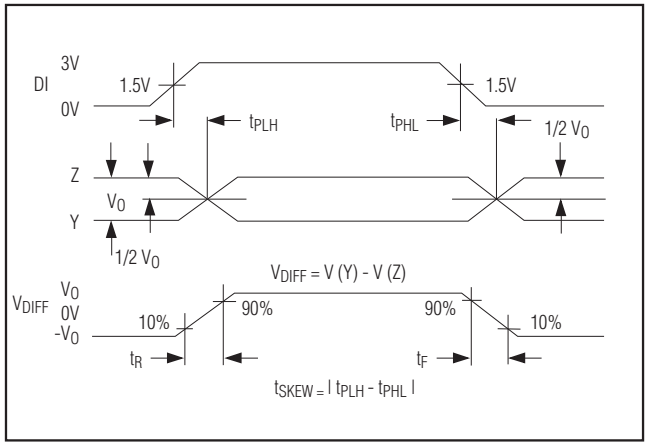

Figure 12. Driver Propagation Delays

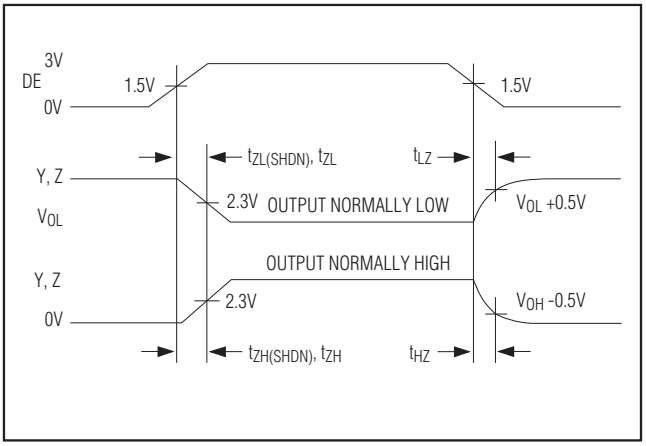

Figure 13. Driver Enable and Disable Times (except MAX488E and MAX490E)

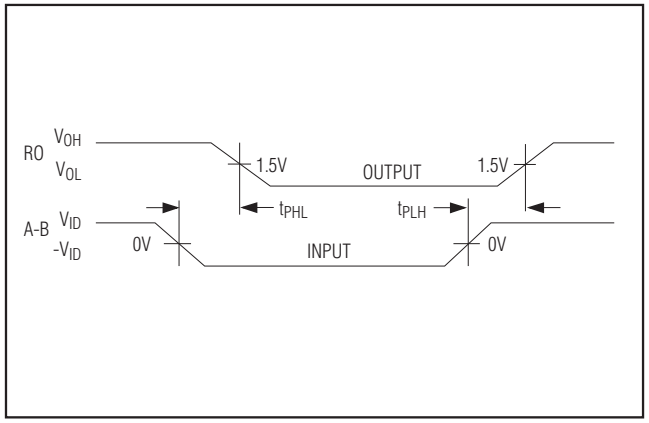

Figure 14. Receiver Propagation Delays

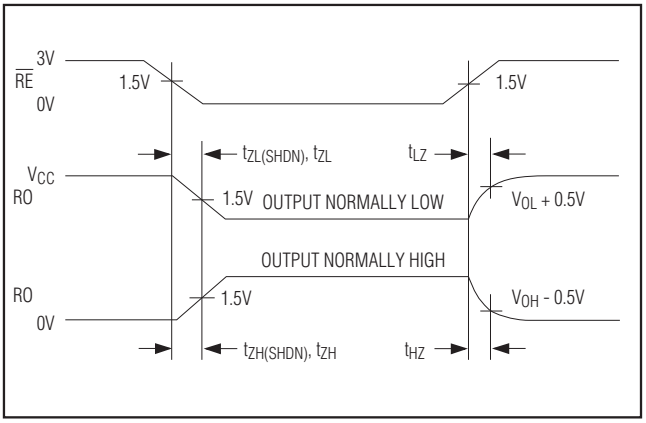

Figure 15. Receiver Enable and Disable Times (except MAX488E and MAX490E)

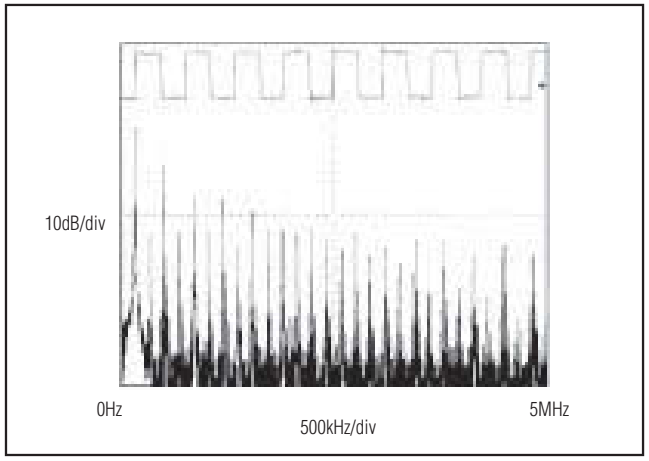

Figure 16. Driver Output Waveform and FFT Plot of MAX485E/MAX490E/MAX491E/MAX1487E Transmitting a 150kHz Signal

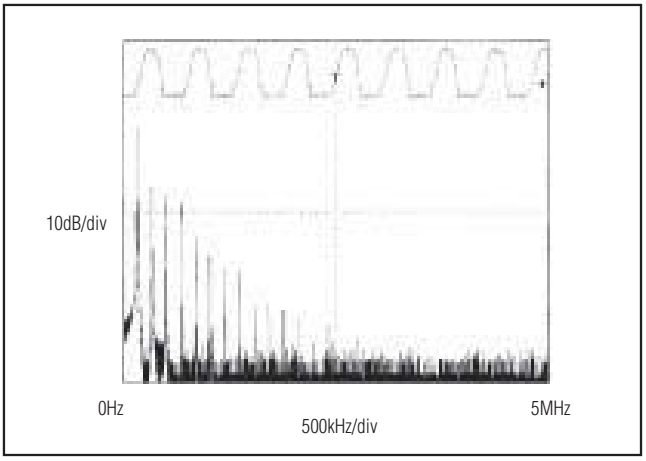

Figure 17. Driver Output Waveform and FFT Plot of MAX483E/MAX487E–MAX489E Transmitting a 150kHz Signal

The major difference between tests done using the Human Body Model and IEC1000-4-2 is higher peak current in IEC1000-4-2, because series resistance is lower in the IEC1000-4-2 model. Hence, the ESD withstand voltage measured to IEC1000-4-2 is generally lower than that measured using the Human Body Model. Figure 7 shows the current waveform for the 8kV IEC1000-4-2 ESD contact-discharge test.

The air-gap test involves approaching the device with a charged probe. The contact-discharge method connects the probe to the device before the probe is energized.

Machine Model

The Machine Model for ESD tests all pins using a 200pF storage capacitor and zero discharge resistance. Its objective is to emulate the stress caused by contact that occurs with handling and assembly during manufacturing. Of course, all pins require this protection during manufacturing—not just inputs and outputs. Therefore, after PC board assembly, the Machine Model is less relevant to I/O ports.

MAX487E/MAX1487E: 128 Transceivers on the Bus

The 48kΩ, 1/4-unit-load receiver input impedance of the MAX487E and MAX1487E allows up to 128 transceivers on a bus, compared to the 1-unit load (12kΩ input impedance) of standard RS-485 drivers (32 transceivers maximum). Any combination of MAX487E/MAX1487E and other RS-485 transceivers with a total of 32 unit loads or less can be put on the bus. The MAX481E, MAX483E, MAX485E, and MAX488E–MAX491E have standard 12kΩ receiver input impedance.

MAX483E/MAX487E/MAX488E/MAX489E: Reduced EMI and Reflections

The MAX483E and MAX487E–MAX489E are slew-rate limited, minimizing EMI and reducing reflections caused by improperly terminated cables. Figure 16 shows the driver output waveform and its Fourier analysis of a 150kHz signal transmitted by a MAX481E, MAX485E, MAX490E, MAX491E, or MAX1487E. High-frequency harmonics with large amplitudes are evident. Figure 17 shows the same information displayed for a MAX483E, MAX487E, MAX488E, or MAX489E transmitting under the same conditions. Figure 17's high-frequency harmonics have much lower amplitudes, and the potential for EMI is significantly reduced.

Low-Power Shutdown Mode (MAX481E/MAX483E/MAX487E)

A low-power shutdown mode is initiated by bringing both $\overline{RE}$ high and DE low. The devices will not shut down unless both the driver and receiver are disabled. In shutdown, the devices typically draw only 0.5µA of supply current.

$\overline{RE}$ and DE may be driven simultaneously; the parts are guaranteed not to enter shutdown if $\overline{RE}$ is high and DE is low for less than 50ns. If the inputs are in this state for at least 600ns, the parts are guaranteed to enter shutdown.

For the MAX481E, MAX483E, and MAX487E, the t_{ZH} and t_{ZL} enable times assume the part was not in the low-power shutdown state (the MAX485E, MAX488E–MAX491E, and MAX1487E can not be shut down). The $t_{ZH(SHDN)}$ and $t_{ZL(SHDN)}$ enable times assume the parts were shut down (see *Electrical Characteristics*).

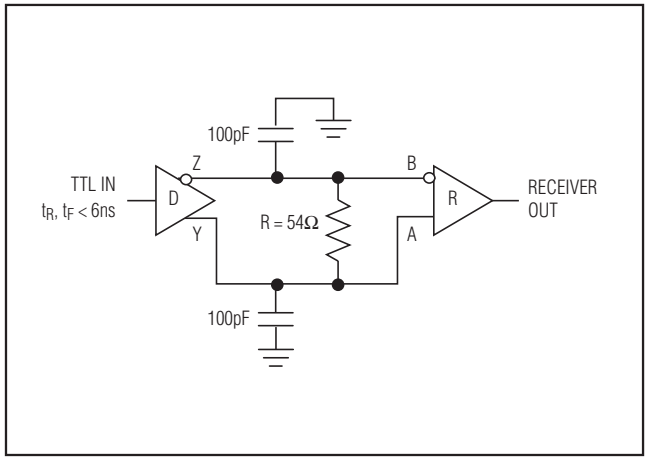

Figure 18. Receiver Propagation Delay Test Circuit

It takes the drivers and receivers longer to become enabled from the low-power shutdown state ($t_{ZH(SHDN)}$, $t_{ZL(SHDN)}$) than from the operating mode (t_{ZH}, t_{ZL}). (The parts are in operating mode if the $\overline{RE}$, DE inputs equal a logical 0,1 or 1,1 or 0, 0.)

Driver Output Protection

Excessive output current and power dissipation caused by faults or by bus contention are prevented by two mechanisms. A foldback current limit on the output stage provides immediate protection against short circuits over the whole common-mode voltage range (see *Typical Operating Characteristics*). In addition, a thermal shutdown circuit forces the driver outputs into a high-impedance state if the die temperature rises excessively.

Propagation Delay

Many digital encoding schemes depend on the difference between the driver and receiver propagation delay times. Typical propagation delays are shown in Figures 19–22 using Figure 18's test circuit.

The difference in receiver delay times, t_{PLH} - t_{PHL}, is typically under 13ns for the MAX481E, MAX485E, MAX490E, MAX491E, and MAX1487E, and is typically less than 100ns for the MAX483E and MAX487E–MAX489E.

The driver skew times are typically 5ns (10ns max) for the MAX481E, MAX485E, MAX490E, MAX491E, and MAX1487E, and are typically 100ns (800ns max) for the MAX483E and MAX487E–MAX489E.

Typical Applications

The MAX481E, MAX483E, MAX485E, MAX487E–MAX491E, and MAX1487E transceivers are designed for bidirectional data communications on multipoint bus transmission lines. Figures 25 and 26 show typical network application circuits. These parts can also be used as line repeaters, with cable lengths longer than 4000 feet.

To minimize reflections, the line should be terminated at both ends in its characteristic impedance, and stub lengths off the main line should be kept as short as possible. The slew-rate-limited MAX483E and MAX487E–MAX489E are more tolerant of imperfect termination. Bypass the V_{CC} pin with 0.1µF.

Isolated RS-485

For isolated RS-485 applications, see the MAX253 and MAX1480 data sheets.

Line Length vs. Data Rate

The RS-485/RS-422 standard covers line lengths up to 4000 feet. Figures 23 and 24 show the system differential voltage for the parts driving 4000 feet of 26AWG twisted-pair wire at 110kHz into 100Ω loads.

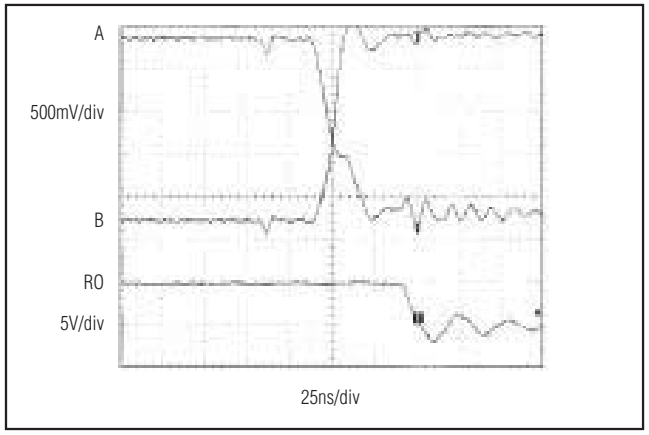

Figure 19. MAX481E/MAX485E/MAX490E/MAX1487E Receiver t_{PHL}

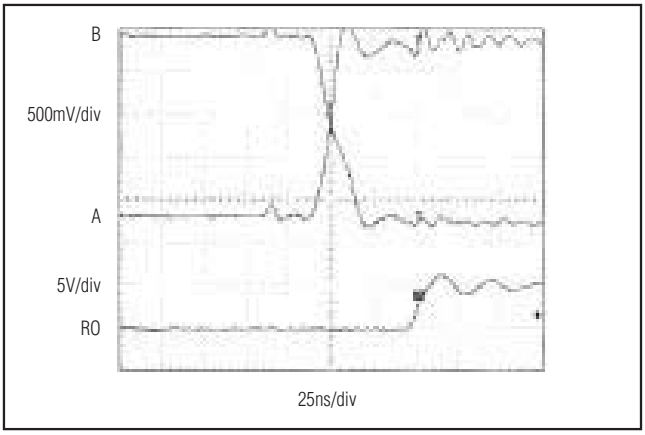

Figure 20. MAX481E/MAX485E/MAX490E/MAX491E/ MAX1487E Receiver t_{PLH}

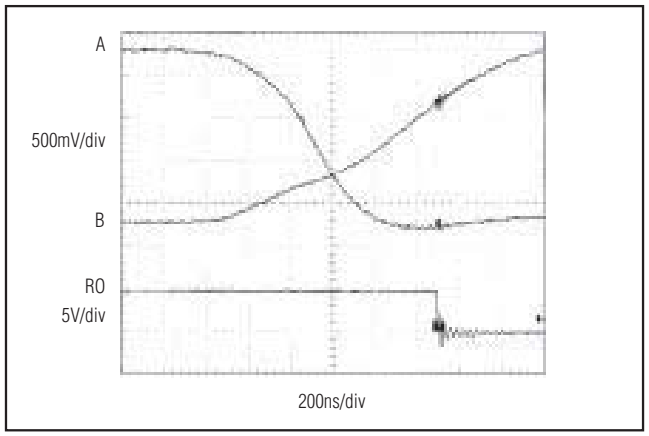

Figure 21. MAX483E/MAX487E–MAX489E Receiver t_{PHL}

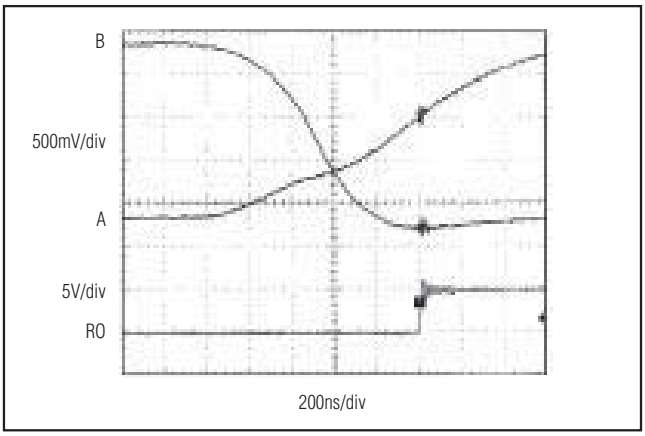

Figure 22. MAX483E/MAX487E–MAX489E Receiver t_{PLH}

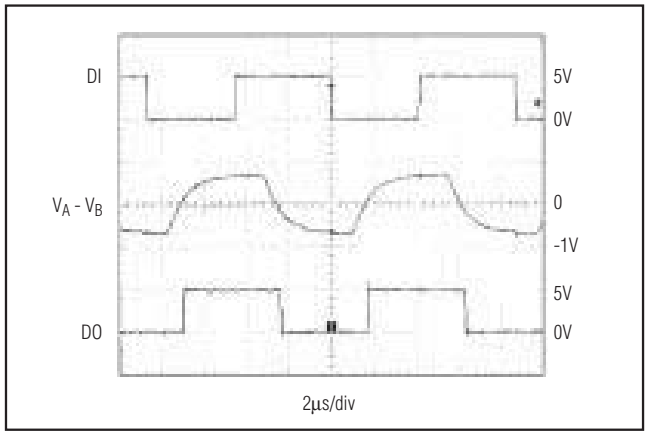

Figure 23. MAX481E/MAX485E/MAX490E/MAX491E/ MAX1487E System Differential Voltage at 110kHz Driving 4000ft of Cable

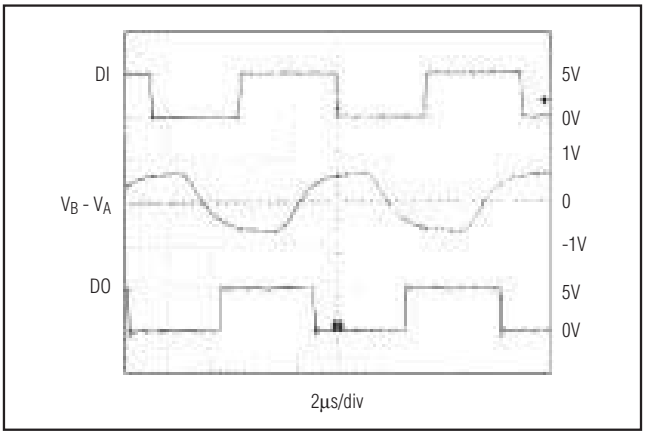

Figure 24. MAX483E/MAX1487E–MAX489E System Differential Voltage at 110kHz Driving 4000ft of Cable

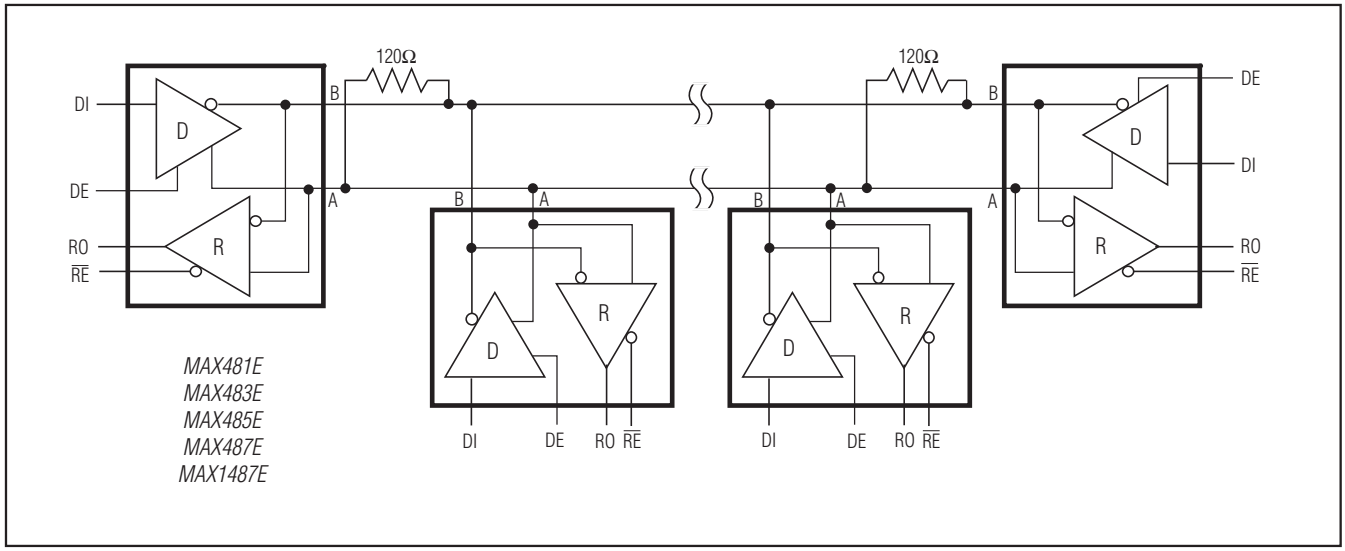

Figure 25. MAX481E/MAX483E/MAX485E/MAX487E/MAX1487E Typical Half-Duplex RS-485 Network

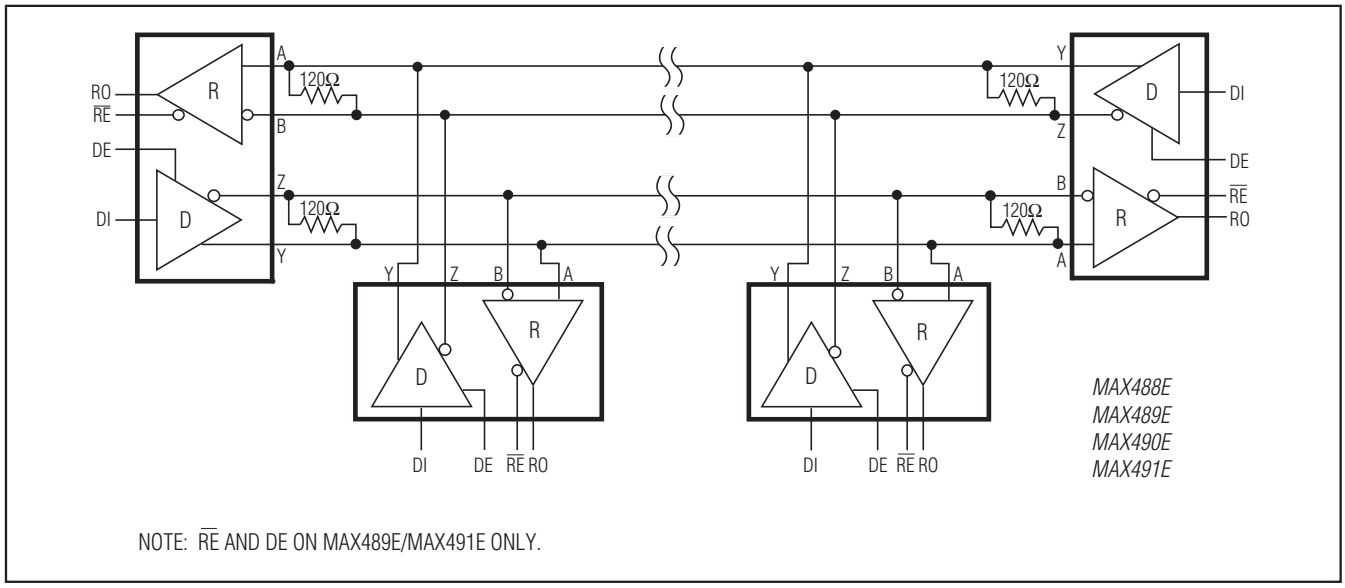

Figure 26. MAX488E–MAX491E Full-Duplex RS-485 Network

±15kV ESD-Protected, Slew-Rate-Limited, Low-Power, RS-485/RS-422 Transceivers

Ordering Information (continued)

PART	TEMP RANGE	PIN-PACKAGE
MAX485ECPA	0°C to +70°C	8 Plastic DIP
MAX485ECSA	0°C to +70°C	8 SO
MAX485EEPA	-40°C to +85°C	8 Plastic DIP
MAX485EESA	-40°C to +85°C	8 SO
MAX487ECPA	0°C to +70°C	8 Plastic DIP
MAX487ECSA	0°C to +70°C	8 SO
MAX487EEPA	-40°C to +85°C	8 Plastic DIP
MAX487EESA	-40°C to +85°C	8 SO
MAX488ECPA	0°C to +70°C	8 Plastic DIP
MAX488ECSA	0°C to +70°C	8 SO
MAX488EEPA	-40°C to +85°C	8 Plastic DIP
MAX488EESA	-40°C to +85°C	8 SO
MAX489ECPD	0°C to +70°C	14 Plastic DIP
MAX489ECSD	0°C to +70°C	14 SO
MAX489EEPD	-40°C to +85°C	14 Plastic DIP
MAX489EESD	-40°C to +85°C	14 SO
MAX490ECPA	0°C to +70°C	8 Plastic DIP
MAX490ECSA	0°C to +70°C	8 SO
MAX490EEPA	-40°C to +85°C	8 Plastic DIP
MAX490EESA	-40°C to +85°C	8 SO
MAX491ECPD	0°C to +70°C	14 Plastic DIP
MAX491ECSD	0°C to +70°C	14 SO
MAX491EEPD	-40°C to +85°C	14 Plastic DIP
MAX491EESD	-40°C to +85°C	14 SO
MAX1487ECPA	0°C to +70°C	8 Plastic DIP
MAX1487ECSA	0°C to +70°C	8 SO
MAX1487EEPA	-40°C to +85°C	8 Plastic DIP
MAX1487EESA	-40°C to +85°C	8 SO

Selector Guide

PART NUMBER	HALF/FULL DUPLEX	DATA RATE (Mbps)	SLEW-RATE LIMITED	LOW-POWER SHUTDOWN	RECEIVER/ DRIVER ENABLE	QUIESCENT CURRENT (µA)	NUMBER OF TRANSMITTERS ON BUS	PIN COUNT
MAX481E	Half	2.5	No	Yes	Yes	300	32	8
MAX483E	Half	0.25	Yes	Yes	Yes	120	32	8
MAX485E	Half	2.5	No	No	Yes	300	32	8
MAX487E	Half	0.25	Yes	Yes	Yes	120	128	8
MAX488E	Full	0.25	Yes	No	No	120	32	8
MAX489E	Full	0.25	Yes	No	Yes	120	32	14
MAX490E	Full	2.5	No	No	No	300	32	8
MAX491E	Full	2.5	No	No	Yes	300	32	14
MAX1487E	Half	2.5	No	No	Yes	230	128	8

Chip Information

TRANSISTOR COUNT: 295

Package Information

For the latest package outline information, go to
www.maxim-ic.com/packages.

maxim integrated™

Maxim cannot assume responsibility for use of any circuitry other than circuitry entirely embodied in a Maxim product. No circuit patent licenses are implied. Maxim reserves the right to change the circuitry and specifications without notice at any time. The parametric values (min and max limits) shown in the Electrical Characteristics table are guaranteed. Other parametric values quoted in this data sheet are provided for guidance.

© 2003 Maxim Integrated
The Maxim logo and Maxim Integrated are trademarks of Maxim Integrated Products, Inc.