19-2462; Rev 2; 3/05

EVALUATION KIT AVAILABLE

One-Time Programmable, Linear-Taper Digital Potentiometers

General Description

The MAX5427/MAX5428/MAX5429 linear-taper digital potentiometers function as mechanical potentiometers, but replace the mechanics with a simple 2-wire digital interface. These digital potentiometers are unique in that they have an optional one-time programmable feature that either sets the wiper's power-on reset (POR) position to a user-defined value, or the wiper can be set and the interface disabled to prevent further adjustment.

The MAX5427 has an end-to-end resistance of 100kΩ, the MAX5428 a resistance of 50kΩ, and the MAX5429 a resistance of 10kΩ. All these devices have 32 wiper positions, operate from a single 2.7V to 5.5V supply, and use less than 1.5µA (max) static supply current.

The MAX5427/MAX5428/MAX5429 are available in 8-pin thin QFN and µMAX® packages. Each device is guaranteed over the extended temperature range of -40°C to +85°C.

Applications

Mechanical Potentiometer Replacement

Products Using One-Time Factory Calibration

Pin Configurations

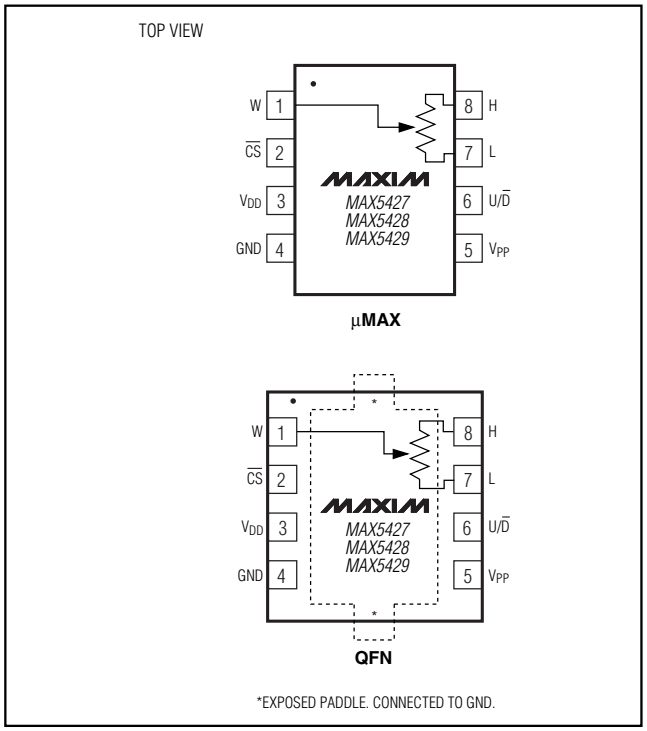

µMax is a registered trademark of Maxim Integrated Products, Inc.

Features

- **Wiper Position Stored After One-Time Fuse Programming**
- **User-Defined Power-On Reset Position**
- **35ppm/°C End-to-End Temperature Coefficient and 5ppm/°C Ratiometric Temperature Coefficient**
- **32 Tap Positions**
- **Tiny 8-Pin Thin QFN and µMAX Packages**
- **Ultra-Low 1.5µA (max) Static Supply Current**
- **2.7V to 5.5V Single-Supply Operation**
- **Wiper Position Programmed Through Simple 2-Wire Serial Interface**
- **10kΩ, 50kΩ, and 100kΩ End-to-End Resistances**

Ordering Information

PART	TEMP RANGE	PIN-PACKAGE	R (kΩ)
MAX5427EUA	-40°C to +85°C	8 µMAX	100
MAX5427ETA	-40°C to +85°C	8 Thin QFN-EP*	100
MAX5428EUA	-40°C to +85°C	8 µMAX	50
MAX5428ETA	-40°C to +85°C	8 Thin QFN-EP*	50
MAX5429EUA	-40°C to +85°C	8 µMAX	10
MAX5429ETA	-40°C to +85°C	8 Thin QFN-EP*	10

**EP = Exposed paddle.*

Functional Block Diagram

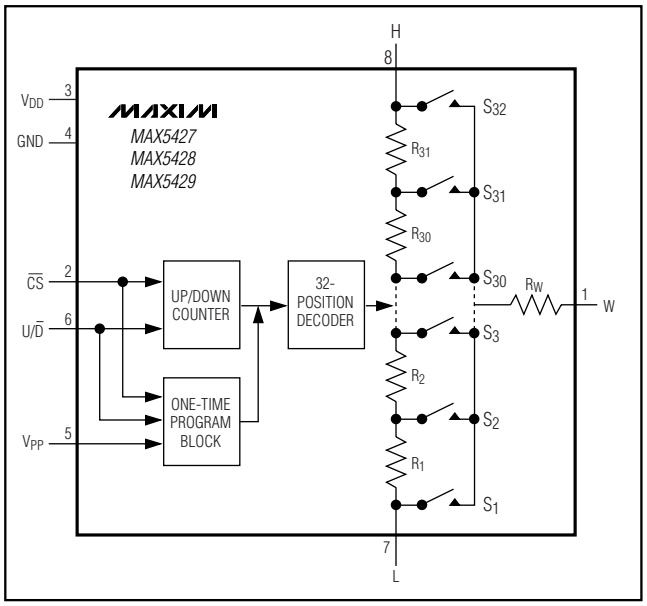

For pricing, delivery, and ordering information, please contact Maxim/Dallas Direct! at 1-888-629-4642, or visit Maxim's website at www.maxim-ic.com.

One-Time Programmable, Linear-Taper Digital Potentiometers

ABSOLUTE MAXIMUM RATINGS

V_{DD} to GND .....-0.3V to +6.0V
V_{PP} to GND .....-0.3V to +12.0V
All Other Pins to GND .....-0.3V to (V_{DD} + 0.3V)
Input and Output Latchup Immunity .....±200mA
Maximum Continuous Current into H, L, and W
MAX5427 .....±1.5mA
MAX5428 .....±1.5mA
MAX5429 .....±2.0mA

Continuous Power Dissipation (T_A = +70°C)
8-Pin µMAX (derate 4.5mW/°C above +70°C) 362mW
8-Pin QFN-EP (derate 24.4mW/°C above +70°C).....1951mW
Operating Temperature Range .....-40°C to +85°C
Junction Temperature .....+150°C
Storage Temperature Range .....-65°C to +150°C
Lead Temperature (soldering, 10s) .....+300°C

Stresses beyond those listed under "Absolute Maximum Ratings" may cause permanent damage to the device. These are stress ratings only, and functional operation of the device at these or any other conditions beyond those indicated in the operational sections of the specifications is not implied. Exposure to absolute maximum rating conditions for extended periods may affect device reliability.

ELECTRICAL CHARACTERISTICS

(V_{DD} = 2.7V to 5.5V, V_{PP} = GND, V_H = V_{DD}, V_L = GND, T_A = -40°C to +85°C, unless otherwise noted. Typical values are at V_{DD} = 5.0V, T_A = +25°C, unless otherwise noted.) (Note 1)

PARAMETER	SYMBOL	CONDITIONS	MIN	TYP	MAX	UNITS
DC PERFORMANCE						
Resolution			32			Taps
End-to-End Resistance		MAX5427	75	100	125	kΩ
		MAX5428	37.5	50	62.5	
		MAX5429	7.5	10	12.5	
End-to-End Resistance Tempco	TC_R			35		ppm/°C
Ratiometric Resistance Tempco		MAX5427/MAX5428		5		ppm/°C
		MAX5429		10		
Integral Nonlinearity	INL	Potentiometer configuration, no load, Figure 1			±1	LSB
Differential Nonlinearity	DNL	Potentiometer configuration, no load, Figure 1			±1	LSB
Full-Scale Error		Potentiometer configuration, no load, Figure 1			-0.5	LSB
Zero-Scale Error		Potentiometer configuration, no load, Figure 1			+0.5	LSB
Wiper Resistance	R_W	MAX5427 I_W = 20µA; MAX5428 I_W = 40µA; MAX5429 I_W = 200µA		100	240	Ω
DIGITAL INPUTS ($\overline{CS}$, U/$\overline{D}$)						
Input High Voltage	V_{IH}		0.7 x V_{DD}			V
Input Low Voltage	V_{IL}				0.3 x V_{DD}	V
Input Current	I_{IN}			±0.1	±1	µA
Input Capacitance	C_{IN}			5		pF
TIMING CHARACTERISTICS (Note 2)						
U/$\overline{D}$ Mode to $\overline{CS}$ Setup	t_{CU}	Figures 2, 3	50			ns
$\overline{CS}$ Hold to U/$\overline{D}$ Mode	t_{CI}	Figures 2, 3	50			ns
U/$\overline{D}$ Step Hold to $\overline{CS}$	t_{IC}	Figures 2, 3	0			ns
U/$\overline{D}$ Step Low Time	t_{IL}	Figures 2, 3	100			ns

ELECTRICAL CHARACTERISTICS (continued)

(V_{DD} = 2.7V to 5.5V, V_{PP} = GND, V_H = V_{DD}, V_L = GND, T_A = -40°C to +85°C, unless otherwise noted. Typical values are at V_{DD} = 5.0V, T_A = +25°C, unless otherwise noted.) (Note 1)

PARAMETER	SYMBOL	CONDITIONS	MIN	TYP	MAX	UNITS
U/$\overline{D}$ Step High Time	t_{IH}	Figures 2, 3	100			ns
Wiper Switching Time	t_{IW}	C_L = 0pF, Figures 2, 3		100		ns
V_{PP} Rising Edge to $\overline{CS}$ Falling Edge	t_{PC}	Figure 4	1			ms
$\overline{CS}$ Falling Edge to V_{PP} Falling Edge	t_{CP}	Figure 4	5			ms
$\overline{CS}$ Step Low Time	t_{CL}	Figure 4	5			ms
$\overline{CS}$ Step High Time	t_{CH}	Figure 4	5			ms
V_{PP} Falling Edge to $\overline{CS}$ Rising Edge	t_{PH}	Figure 4	1			ms
U/$\overline{D}$ Frequency	$f_{U/\overline{D}MAX}$				5	MHz
Power-Up Time	t_{UP}	(Note 3)			1	ms
Output Settling Time	t_{SETTLE}	100kΩ variable resistor configuration, C_L = 10pF, Figure 1		1		µs
		100kΩ potentiometer configuration, C_L = 10pF, Figure 1		0.25		
POWER SUPPLY						
Supply Voltage	V_{DD}		2.7		5.5	V
Static Supply Current	I_{DD}	(Note 4)			1.5	µA
Programming Voltage	V_{PP}	T_A < +50°C	10.45		11.55	V
		T_A ≥ +50°C	11		11.55	
Programming Current	I_{PP}	V_{PP} = 11V		5		mA

Note 1: All devices are production tested at T_A = +25°C and are guaranteed by design for T_A = -40°C to +85°C.
Note 2: Digital timing is guaranteed by design, not production tested.
Note 3: Power-up time is the period of time from when the power supply is applied until the serial interface is ready for writing.
Note 4: Digital inputs $\overline{CS}$ and U/$\overline{D}$ are connected to GND or V_{DD}.

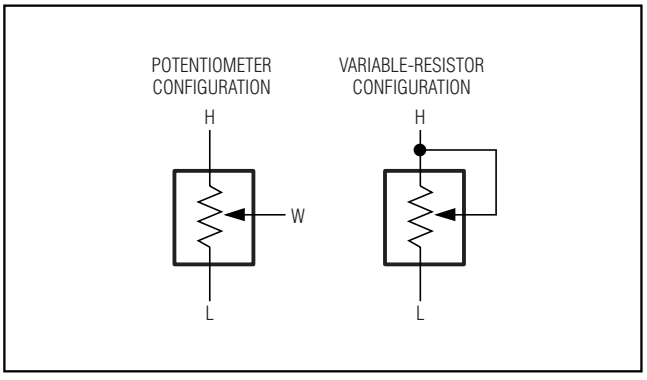

Figure 1. Potentiometer/Variable-Resistor Configuration

One-Time Programmable, Linear-Taper Digital Potentiometers

Typical Operating Characteristics

(V_{DD} = 5.0V, T_A = +25°C, unless otherwise noted.)

WIPER RESISTANCE vs. WIPER VOLTAGE

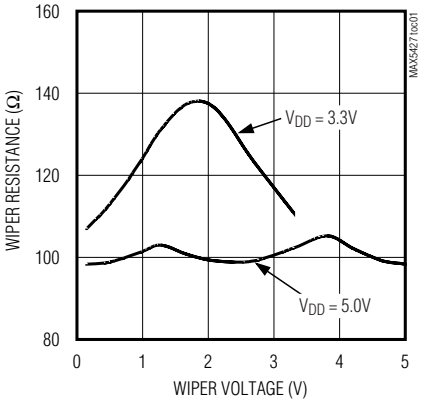

END-TO-END RESISTANCE PERCENT CHANGE vs. TEMPERATURE

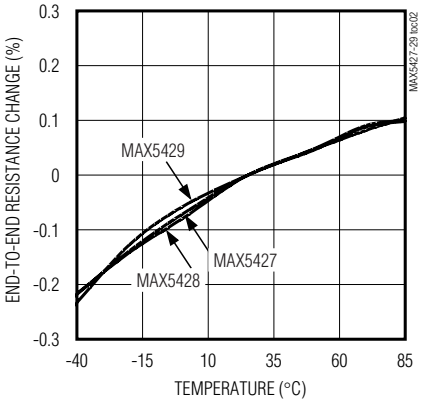

W-TO-L RESISTANCE vs. TAP POSITION

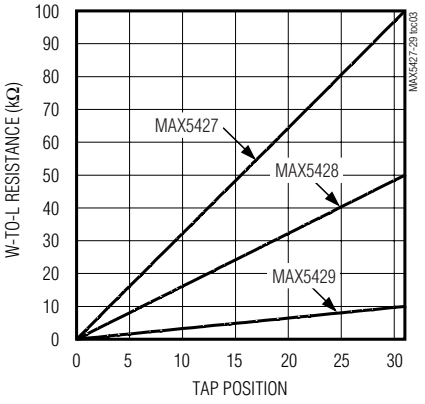

SUPPLY CURRENT vs. TEMPERATURE

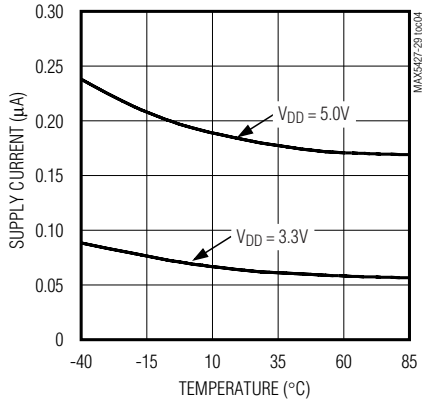

TAP-TO-TAP SWITCHING TRANSIENT

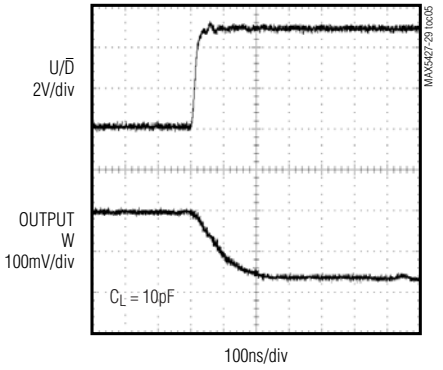

WIPER TRANSIENT AT POWER-ON

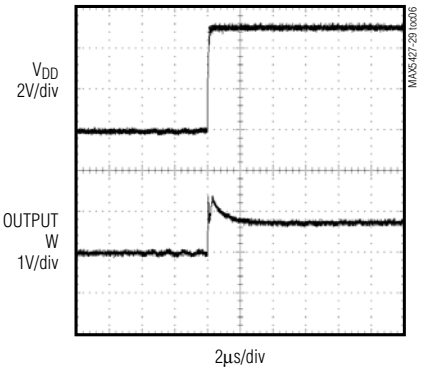

R-DNL ERROR vs. INPUT CODE (MAX5427)

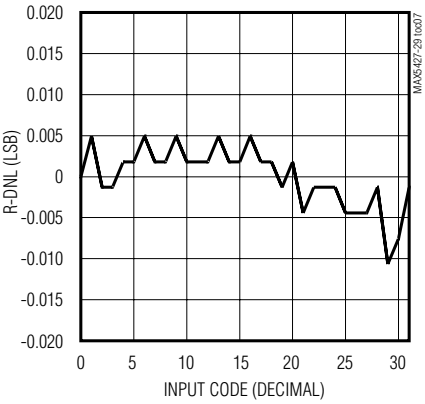

R-INL ERROR vs. INPUT CODE (MAX5427)

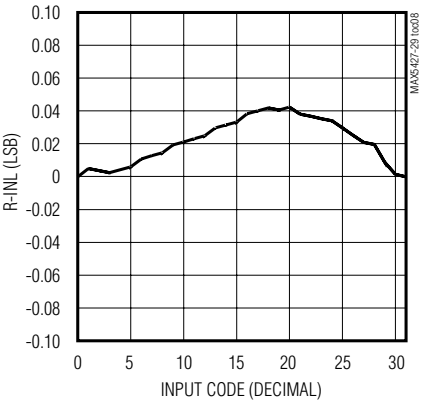

R-DNL ERROR vs. INPUT CODE (MAX5428)

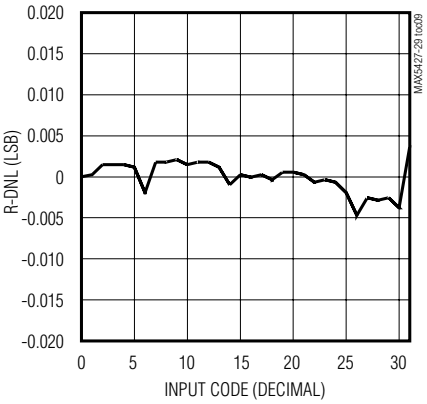

Typical Operating Characteristics (continued)

(V_{DD} = 5.0V, T_A = +25°C, unless otherwise noted.)

R-INL ERROR vs. INPUT CODE (MAX5428)

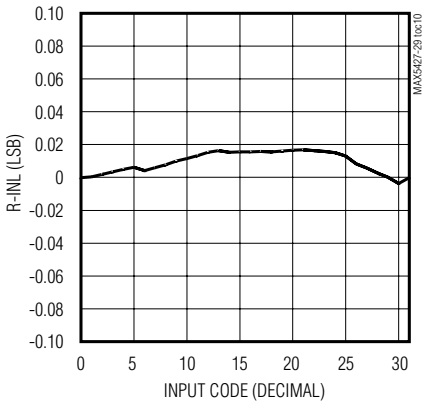

R-DNL ERROR vs. INPUT CODE (MAX5429)

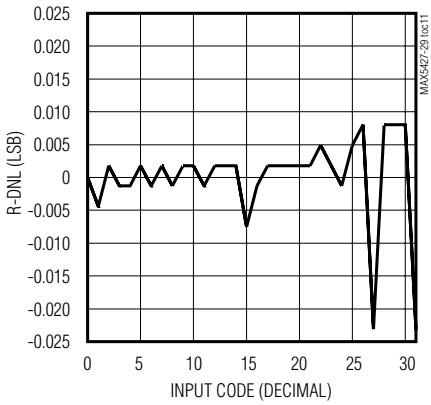

R-INL ERROR vs. INPUT CODE (MAX5429)

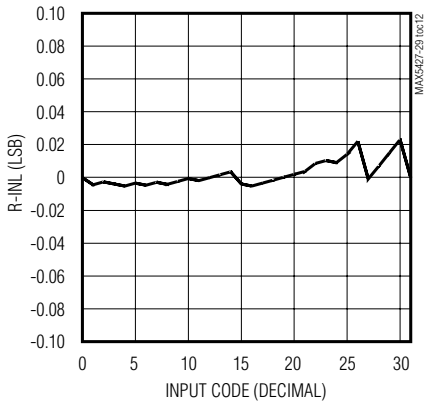

Pin Description

PIN	NAME	FUNCTION
1	W	Wiper Connection
2	$\overline{CS}$	Chip-Select Input. A high-to-low $\overline{CS}$ transition determines the mode: increment if U/$\overline{D}$ is high, or decrement if U/$\overline{D}$ is low. $\overline{CS}$ is also used for one-time programming (see the *One-Time Programming* section).
3	V_{DD}	Power-Supply Voltage
4	GND	Ground
5	V_{PP}	Programming Voltage for One-Time Programming. Connect V_{PP} to 10V supply when one-time programming the device. For normal operation, connect to ground or let float.
6	U/$\overline{D}$	Up/$\overline{Down}$ Control Input. With $\overline{CS}$ low, a low-to-high transition increments or decrements the wiper position.
7	L	Low Terminal of Resistor
8	H	High Terminal of Resistor

Detailed Description

The MAX5427/MAX5428/MAX5429 are 100kΩ/50kΩ/10kΩ (end-to-end resistance) digitally controlled potentiometers. They have 32 tap positions that are accessible to the wiper along the resistor array between H and L.

The wiper (W) position is adjusted sequentially through the tap positions using a simple 2-wire interface. These digital potentiometers have an optional one-time programmable feature that sets the POR position of the wiper. The 2-wire interface can then be disabled, permanently preventing unwanted adjustment.

Digital Interface Operation

The MAX5427/MAX5428/MAX5429 have two modes of operation when the serial interface is active: increment mode and decrement mode. The serial interface is only active when $\overline{CS}$ is low.

The $\overline{CS}$ and U/$\overline{D}$ inputs control the position of the wiper along the resistor array. When $\overline{CS}$ transitions from high to low, the part goes into increment mode if U/$\overline{D}$ is high (Figure 2), and into decrement mode if U/$\overline{D}$ is low (Figure 3). Once the mode is set, the device remains in that mode until $\overline{CS}$ goes high. A low-to-high transition at the U/$\overline{D}$ increments or decrements the wiper position depending on the current mode.

When the $\overline{CS}$ input transitions to high (when serial interface is inactive) and U/$\overline{D}$ is low, the wiper increments or decrements one position in accordance with the state of U/$\overline{D}$ when $\overline{CS}$ went low. If U/$\overline{D}$ is high when $\overline{CS}$ transitions to high, the wiper remains in the same position.

One-Time Programmable, Linear-Taper Digital Potentiometers

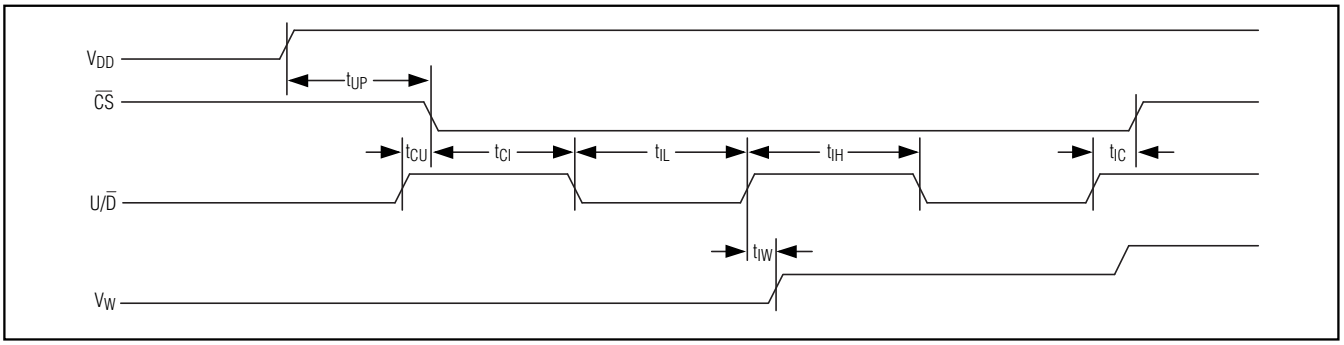

Figure 2. Increment Mode Serial Interface Timing Diagram

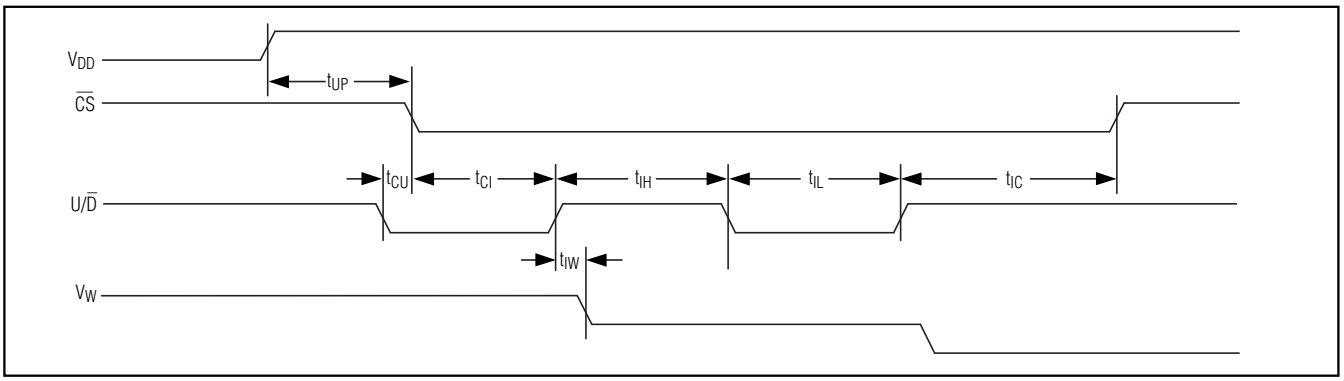

Figure 3. Decrement Mode Serial Interface Timing Diagram

The value of the counter is then stored and the wiper position is maintained.

The wiper performs a make-before-break transition, ensuring that there is never an open circuit during a transition from one resistor tap to another. When the wiper is at either end (max/min) of the resistor array, additional transitions in the direction of the endpoint do not change the counter value (the counter does not wrap around).

One-Time Programming

The factory-set default position of the wiper on power-up is tap 16. However, the power-up position can be changed once using the one-time programming feature. After the wiper is moved to the desired position, the programming sequence is initiated by setting U/$\overline{D}$ high, applying 11V to V_{PP}, and then taking $\overline{CS}$ low. Five pulses on $\overline{CS}$ (consisting of $\overline{CS}$ starting from low and going high for t_{CH} and then low for t_{CL}) program the device (Figure 4). The programming voltage should then be taken to zero. After the device is programmed, V_{PP} can be set to zero or be allowed to float. The wiper position is still adjustable, but always returns to this programmed position on power-up.

If the intent is to program the device to a specific wiper position and not to allow further adjustments, then six programming pulses are required (as opposed to five), as shown in Figure 4. The sixth pulse locks the wiper position and disables the serial interface. This also allows U/$\overline{D}$ and $\overline{CS}$ to float without any increase in supply current. Once the lockout bit is set, no further adjustment to the potentiometer is possible, effectively changing the potentiometer into a fixed resistor-divider (Table 1).

Table 1. One-Time Programming Options

MODE	POWER-ON RESET WIPER POSITION	ADJUSTABLE WIPER
Factory Default (Unprogrammed)	Tap 16	Yes
Programmed (5 Programming Pulses)	Programmed position	Yes
Lock-Bit Set (6 Programming Pulses)	Programmed position	No

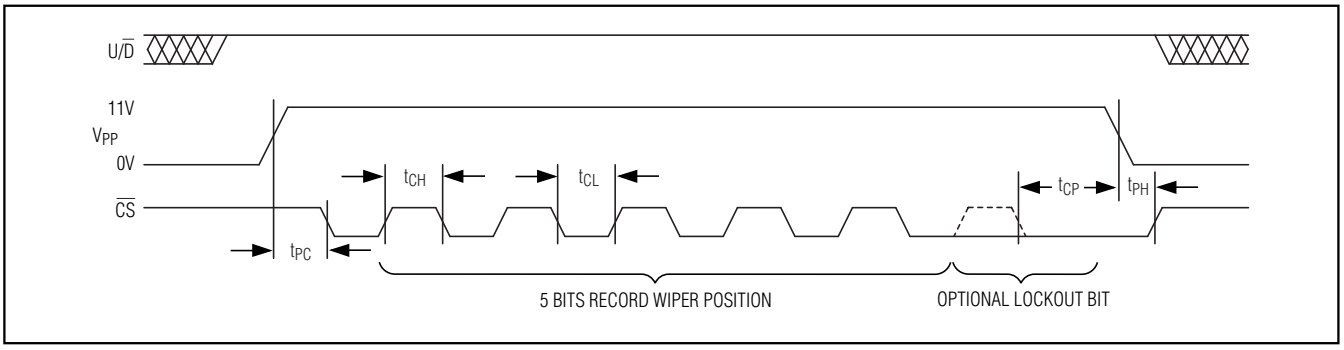

Figure 4. One-Time Program Mode Serial Interface Timing Diagram

It is recommended that the user either use six $\overline{CS}$ pulses (convert to a fixed voltage-divider) or five pulses (program the initial power-up value of the device, but still be able to adjust the wiper). If the device is programmed with five pulses and later it is desired to disable the interface (convert to a fixed voltage-divider), then care must be taken to ensure that the wiper is in the same position as it was originally set to (when programmed with five pulses). The full six programming pulses must be applied. If the wiper is not in its original programmed position prior to disabling the interface, the final locked-out position is correct. Note that once the six-pulse program occurs, no further programming is possible.

The V_{PP} power supply must be able to source at least 5mA and have a good transient response. The V_{PP} power supply should be decoupled with 22µF and have no more than 250µH of inductance and/or 40Ω of parasitic resistance between the capacitors and the device (Figure 5). The device does not require decoupling capacitors near V_{PP}, provided the above guidelines are met.

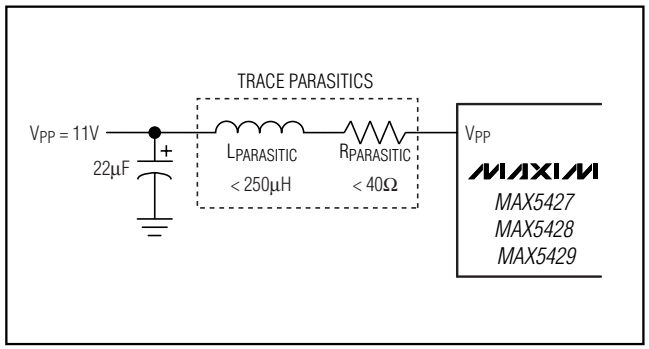

Figure 5. V_{PP} Power-Supply Connection

Chip Information

TRANSISTOR COUNT: 2270

PROCESS: BiCMOS

One-Time Programmable, Linear-Taper Digital Potentiometers

Package Information

(The package drawing(s) in this data sheet may not reflect the most current specifications. For the latest package outline information, go to **www.maxim-ic.com/packages**.)

6, 8, &10L, DFN THIN.EPS

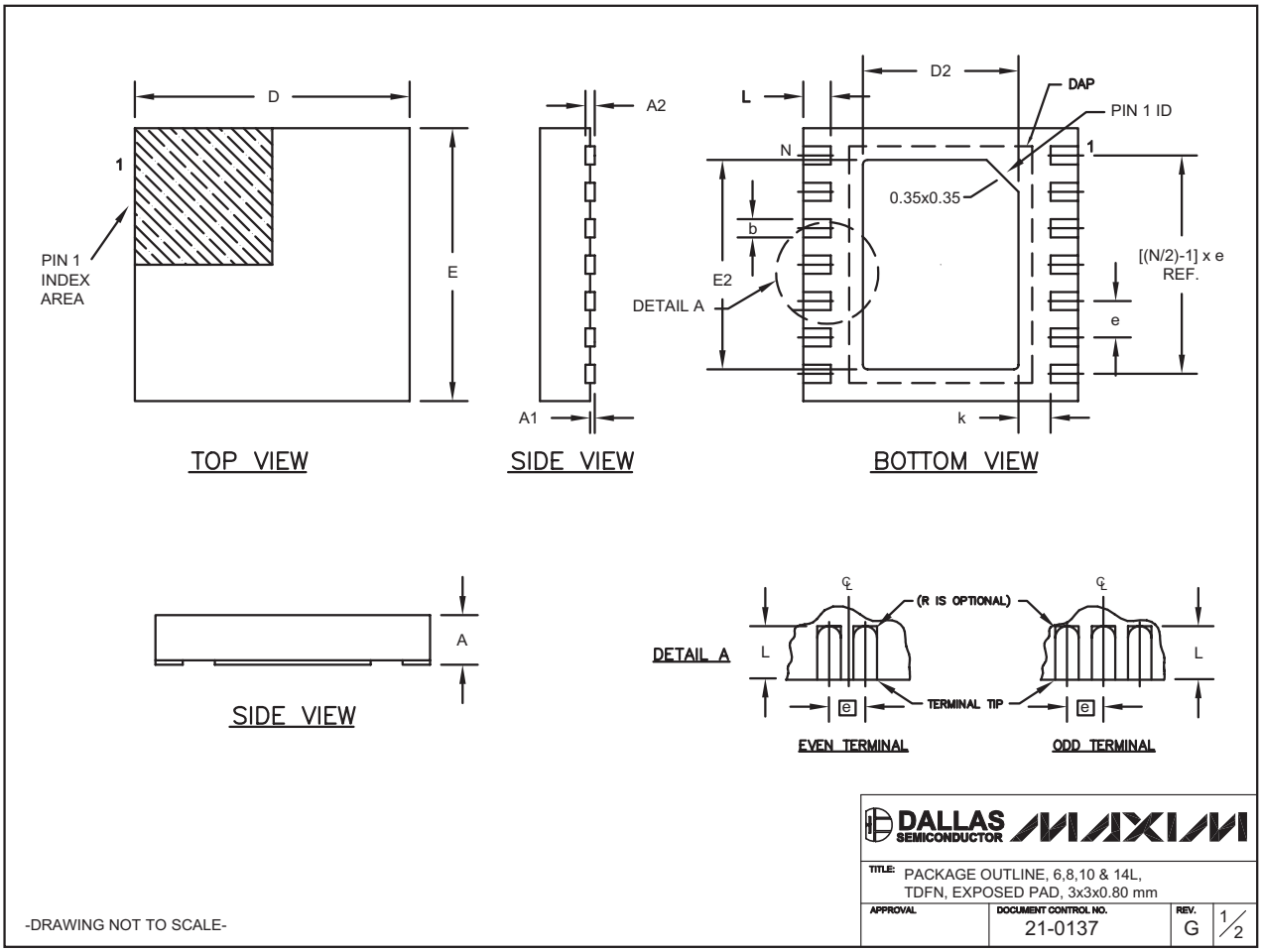

Package Information (continued)

(The package drawing(s) in this data sheet may not reflect the most current specifications. For the latest package outline information, go to **www.maxim-ic.com/packages**.)

COMMON DIMENSIONS		
SYMBOL	MIN.	MAX.
A	0.70	0.80
D	2.90	3.10
E	2.90	3.10
A1	0.00	0.05
L	0.20	0.40
k	0.25 MIN.	
A2	0.20 REF.	

PACKAGE VARIATIONS								
PKG. CODE	N	D2	E2	e	JEDEC SPEC	b	[(N/2)-1] x e	DOWNBONDS ALLOWED
T633-1	6	1.50±0.10	2.30±0.10	0.95 BSC	MO229 / WEEA	0.40±0.05	1.90 REF	NO
T633-2	6	1.50±0.10	2.30±0.10	0.95 BSC	MO229 / WEEA	0.40±0.05	1.90 REF	NO
T833-1	8	1.50±0.10	2.30±0.10	0.65 BSC	MO229 / WEEC	0.30±0.05	1.95 REF	NO
T833-2	8	1.50±0.10	2.30±0.10	0.65 BSC	MO229 / WEEC	0.30±0.05	1.95 REF	NO
T833-3	8	1.50±0.10	2.30±0.10	0.65 BSC	MO229 / WEEC	0.30±0.05	1.95 REF	YES
T1033-1	10	1.50±0.10	2.30±0.10	0.50 BSC	MO229 / WEED-3	0.25±0.05	2.00 REF	NO
T1433-1	14	1.70±0.10	2.30±0.10	0.40 BSC	- - - -	0.20±0.05	2.40 REF	YES
T1433-2	14	1.70±0.10	2.30±0.10	0.40 BSC	- - - -	0.20±0.05	2.40 REF	NO

NOTES:
1. ALL DIMENSIONS ARE IN mm. ANGLES IN DEGREES.
2. COPLANARITY SHALL NOT EXCEED 0.08 mm.
3. WARPAGE SHALL NOT EXCEED 0.10 mm.
4. PACKAGE LENGTH/PACKAGE WIDTH ARE CONSIDERED AS SPECIAL CHARACTERISTIC(S).
5. DRAWING CONFORMS TO JEDEC MO229, EXCEPT DIMENSIONS "D2" AND "E2", AND T1433-1 & T1433-2.
6. "N" IS THE TOTAL NUMBER OF LEADS.
7. NUMBER OF LEADS SHOWN ARE FOR REFERENCE ONLY.

-DRAWING NOT TO SCALE-

DALLAS SEMICONDUCTOR MAXIM

TITLE: PACKAGE OUTLINE, 6,8,10 & 14L, TDFN, EXPOSED PAD, 3x3x0.80 mm

APPROVAL	DOCUMENT CONTROL NO.	REV.	
	21-0137	G	2/2

One-Time Programmable, Linear-Taper Digital Potentiometers

Package Information (continued)

(The package drawing(s) in this data sheet may not reflect the most current specifications. For the latest package outline information, go to **www.maxim-ic.com/packages**.)

8LUMAXD.EPS

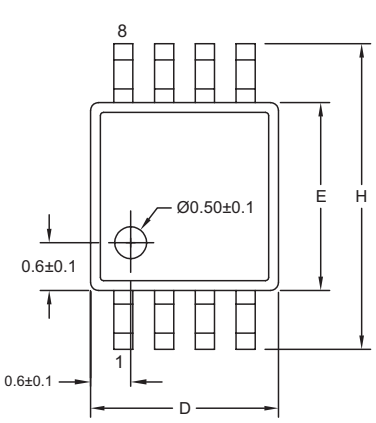

TOP VIEW

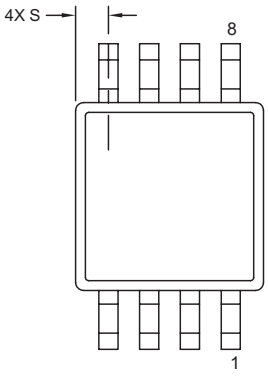

BOTTOM VIEW

	INCHES		MILLIMETERS	
DIM	MIN	MAX	MIN	MAX
A	-	0.043	-	1.10
A1	0.002	0.006	0.05	0.15
A2	0.030	0.037	0.75	0.95
b	0.010	0.014	0.25	0.36
c	0.005	0.007	0.13	0.18
D	0.116	0.120	2.95	3.05
e	0.0256 BSC		0.65 BSC	
E	0.116	0.120	2.95	3.05
H	0.188	0.198	4.78	5.03
L	0.016	0.026	0.41	0.66
α	0∞	6∞	0∞	6∞
S	0.0207 BSC		0.5250 BSC	

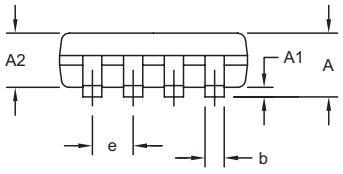

FRONT VIEW

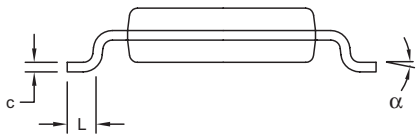

SIDE VIEW

NOTES:
1. D&E DO NOT INCLUDE MOLD FLASH.
2. MOLD FLASH OR PROTRUSIONS NOT TO EXCEED 0.15MM (.006").
3. CONTROLLING DIMENSION: MILLIMETERS.
4. MEETS JEDEC MO-187C-AA.

DALLAS SEMICONDUCTOR MAXIM

PROPRIETARY INFORMATION

TITLE: PACKAGE OUTLINE, 8L uMAX/uSOP

APPROVAL	DOCUMENT CONTROL NO.	REV.	
	21-0036	J	1/1

Maxim cannot assume responsibility for use of any circuitry other than circuitry entirely embodied in a Maxim product. No circuit patent licenses are implied. Maxim reserves the right to change the circuitry and specifications without notice at any time.

© 2005 Maxim Integrated Products Printed USA MAXIM is a registered trademark of Maxim Integrated Products, Inc.