# MAX603/MAX604

# 5V/3.3V or Adjustable, Low-Dropout, Low $I_Q$, 500mA Linear Regulators

## General Description

The MAX603/MAX604 low-dropout, low quiescent current, linear regulators supply 5V, 3.3V, or an adjustable output for currents up to 500mA. They are available in a 1.8W SO package. Typical dropouts are 320mV at 5V and 500mA, or 240mV at 3.3V and 200mA. Quiescent currents are 15µA typ and 35µA max. Shutdown turns off all circuitry and puts the regulator in a 2µA off mode. A unique protection scheme limits reverse currents when the input voltage falls below the output. Other features include foldback current limiting and thermal overload protection.

The output is preset at 3.3V for the MAX604 and 5V for the MAX603. In addition, both devices employ Dual Mode™ operation, allowing user-adjustable outputs from 1.25V to 11V using external resistors. The input voltage supply range is 2.7V to 11.5V.

The MAX603/MAX604 feature a 500mA P-channel MOSFET pass transistor. This transistor allows the devices to draw less than 35µA over temperature, independent of the output current. The supply current remains low because the P-channel MOSFET pass transistor draws no base currents (unlike the PNP transistors of conventional bipolar linear regulators). Also, when the input-to-output voltage differential becomes small, the internal P-channel MOSFET does not suffer from excessive base current losses that occur with saturated PNP transistors.

## Features

- 500mA Output Current, with Foldback Current Limiting
- High-Power (1.8W) 8-Pin SO Package
- Dual Mode™ Operation: Fixed or Adjustable Output from 1.25V to 11V
- Large Input Range (2.7V to 11.5V)
- Internal 500mA P-Channel Pass Transistor
- 15µA Typical Quiescent Current
- 2µA (Max) Shutdown Mode
- Thermal Overload Protection
- Reverse-Current Protection

## Applications

- 5V and 3.3V Regulators
- 1.25V to 11V Adjustable Regulators
- Battery-Powered Devices
- Pagers and Cellular Phones
- Portable Instruments
- Solar-Powered Instruments

**Ordering Information appears at end of data sheet.**

## Typical Operating Circuit

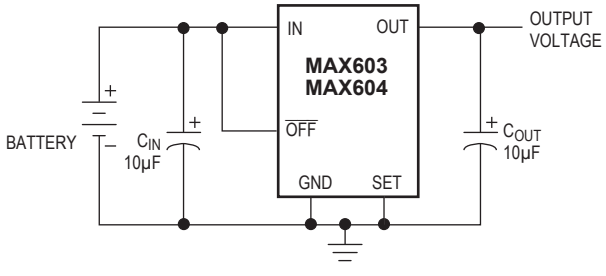


*Dual Mode is a trademark of Maxim Integrated Products.*

## Pin Configuration

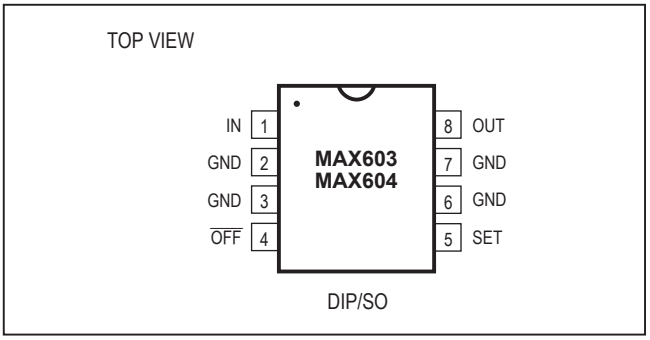


19-0269; Rev 1; 4/17

maxim integrated™

## Absolute Maximum Ratings

Supply Voltage (IN or OUT to GND) .....-0.3V to +12V
Output Short-Circuit Duration ..... 1 min
Continuous Output Current .....600mA
SET, $\overline{OFF}$ Input Voltages..... -0.3V to the greater of (IN + 0.3V) or (OUT + 0.3V)
Continuous Power Dissipation ($T_A$ = +70°C)
Plastic DIP (derate 9.09mW/°C above +70°C).....727mW
SO (derate 23.6mW/°C above +70°C) .....1.8W
CERDIP (derate 8.00mW/°C above +70°C).....640mW

Operating Temperature Ranges
MAX60_C_A.....0°C to +70°C
MAX60_E_A ..... -40°C to +85°C
MAX60_MJA..... -55°C to +125°C
Junction Temperature.....+150°C
Storage Temperature Range ..... -65°C to +160°C
Lead Temperature (soldering, 10sec) .....+300°C

*Stresses beyond those listed under "Absolute Maximum Ratings" may cause permanent damage to the device. These are stress ratings only, and functional operation of the device at these or any other conditions beyond those indicated in the operational sections of the specifications is not implied. Exposure to absolute maximum rating conditions for extended periods may affect device reliability.*

## Electrical Characteristics

($V_{IN}$ = 6V (MAX603) or 4.3V (MAX604), $C_{IN}$ = $C_{OUT}$ = 10µF, $\overline{OFF}$ = $V_{IN}$, SET = GND, $T_J$ = $T_{MIN}$ to $T_{MAX}$, unless otherwise noted. Typical values are at $T_J$ = +25°C.) (Note 1)

| PARAMETER | SYMBOL | CONDITIONS | | MIN | TYP | MAX | UNITS |
|---|---|---|---|---|---|---|---|
| Input Voltage | $V_{IN}$ | SET = OUT, $R_L$ = 1kΩ | MAX60_C | 2.7 | | 11.5 | V |
| | | | MAX60_E | 2.9 | | 11.5 | |
| | | | MAX60_M | 3.0 | | 11.5 | |
| Output Voltage (Note 2) | $V_{OUT}$ | $I_{OUT}$ = 20µA to 500mA, 6.0V < $V_{IN}$ < 11.5V | MAX603 | 4.75 | 5.00 | 5.25 | V |
| | | $I_{OUT}$ = 20µA to 300mA, 4.3V < $V_{IN}$ < 11.5V | MAX604 | 3.15 | 3.30 | 3.45 | |
| Load Regulation | $\Delta V_{LDR}$ | $I_{OUT}$ = 1mA to 500mA | MAX603C/E | | 60 | 100 | mV |
| | | | MAX603M | | | 150 | |
| | | $I_{OUT}$ = 1mA to 300mA | MAX604 | | 30 | 100 | |
| Line Regulation | $\Delta V_{LNR}$ | ($V_{OUT}$ + 0.5V) ≤ $V_{IN}$ ≤ 11.5V, $I_{OUT}$ = 25mA | | | 7 | 40 | mV |
| Dropout Voltage (Note 3) | $\Delta V_{DO}$ | $I_{OUT}$ = 200mA | MAX603 | | 130 | 220 | mV |
| | | $I_{OUT}$ = 500mA | | | 320 | 550 | |
| | | $I_{OUT}$ = 200mA | MAX604 | | 240 | 410 | |
| | | $I_{OUT}$ = 400mA | | | 480 | 820 | |
| Quiescent Current | $I_Q$ | 3.0V ≤ $V_{IN}$ ≤ 11.5V, SET = OUT | MAX60_C/E | | 15 | 35 | µA |
| | | | MAX60_M | | | 40 | |
| OFF Quiescent Current | $I_{Q\ OFF}$ | $\overline{OFF}$ ≤ 0.4V, $R_L$ = 1kΩ, ($V_{OUT}$ + 1V) ≤ $V_{IN}$ ≤ 11.5V | MAX60_C | | 0.01 | 2 | µA |
| | | | MAX60_E | | | 10 | |
| | | | MAX60_M | | | 20 | |
| Minimum Load Current | $I_{OUT\ MIN}$ | $V_{IN}$ = 11.5V, SET = OUT | MAX60_C | | | 2 | µA |
| | | | MAX60_E | | | 6 | |
| | | | MAX60_M | | | 20 | |
| Foldback Current Limit (Note 4) | $I_{LIM}$ | $V_{OUT}$ < 0.8V | | | 350 | | mA |
| | | $V_{OUT}$ > 0.8V and $V_{IN}$ - $V_{OUT}$ > 0.7V | | | 1200 | | |
| Thermal Shutdown Temperature | $T_{SD}$ | | | | 160 | | °C |
| Thermal Shutdown Hysteresis | $\Delta T_{SD}$ | | | | 10 | | °C |

## Electrical Characteristics (continued)

($V_{IN}$ = 6V (MAX603) or 4.3V (MAX604), $C_{IN}$ = $C_{OUT}$ = 10µF, $\overline{OFF}$ = $V_{IN}$, SET = GND, $T_J$ = $T_{MIN}$ to $T_{MAX}$, unless otherwise noted. Typical values are at $T_J$ = +25°C.) (Note 1)

| PARAMETER | SYMBOL | CONDITIONS | | MIN | TYP | MAX | UNITS |
|---|---|---|---|---|---|---|---|
| Reverse-Current Protection Threshold (Note 5) | $\Delta V_{RTH}$ | $V_{OUT}$ = 4.5V | MAX603 | | 6 | 20 | mV |
| | | $V_{OUT}$ = 3.0V | MAX604 | | 6 | 20 | |
| Reverse Leakage Current | $I_{RVL}$ | $V_{IN}$ = 0V, $V_{OUT}$ = 4.5V (MAX603) $V_{OUT}$ = 3.0V (MAX604) | MAX60_C | | 0.01 | 10 | µA |
| | | | MAX60_E | | | 20 | |
| | | | MAX60_M | | | 100 | |
| Start-Up Overshoot | $V_{OSH}$ | $R_L$ = 1kΩ, $C_{OUT}$ = 10µF, $\overline{OFF}$ rise time ≤ 1µs | | | 2 | | $\%V_{OUT}$ |
| Time Required to Exit Shutdown | $t_{START}$ | $V_{IN}$ = 9V, $R_L$ = 18Ω, $V_{\overline{OFF}}$ switched from 0V to $V_{IN}$, time from 0% to 95% of $V_{OUT}$ | | | 200 | | µs |
| Dual-Mode SET Threshold | $V_{SET\ TH}$ | For internal feedback | | | 80 | 30 | mV |
| | | For external feedback | | 150 | 80 | | |
| SET Reference Voltage | $V_{SET}$ | SET = OUT, $R_L$ = 1kΩ | | 1.16 | 1.20 | 1.24 | V |
| SET Input Leakage Current | $I_{SET}$ | $V_{SET}$ = 1.5V or 0V | | | ±0.01 | ±10 | nA |
| OUT Leakage Current | $I_{OUT\ LKG}$ | $V_{IN}$ = 11.5V, $V_{OUT}$ = 2V, SET = OUT | MAX60_C | | 0.01 | 2 | µA |
| | | | MAX60_E | | | 6 | |
| | | | MAX60_M | | | 20 | |
| $\overline{OFF}$ Threshold Voltage | $V_{IL\ \overline{OFF}}$ | Off | | | | 0.4 | V |
| | $V_{IH\ \overline{OFF}}$ | On, SET = OUT, $V_{IN}$ = 4V | | 2.0 | | | |
| | | On, SET = OUT, $V_{IN}$ = 6V | | 3.0 | | | |
| | | On, SET = OUT, $V_{IN}$ = 11.5V | | 4.0 | | | |
| $\overline{OFF}$ Input Leakage Current | $I_{\overline{OFF}}$ | $V_{\overline{OFF}}$ = $V_{IN}$ or GND | | | ±0.01 | ±10 | nA |
| Output Noise (Note 6) | $e_n$ | 10Hz to 10kHz, SET = OUT, $R_L$ = 1kΩ, $C_{OUT}$ = 10µF | | | 250 | | $\mu V_{RMS}$ |

**Note 1:** Electrical specifications are measured by pulse testing and are guaranteed for a junction temperature ($T_J$) equal to the operating temperature range. C and E grade parts may be operated up to a $T_J$ of +125°. Expect performance similar to M grade specifications. For $T_J$ between +125°C and +150°C, the output voltage may drift more.

**Note 2:** ($V_{IN}$ - $V_{OUT}$) is limited to keep the product ($I_{OUT}$ x ($V_{IN}$ - $V_{OUT}$)) from exceeding the package power dissipation limits.

**Note 3:** Dropout Voltage is ($V_{IN}$ - $V_{OUT}$) when $V_{OUT}$ falls to 100mV below its nominal value at $V_{IN}$ = $V_{OUT}$ + 2V. For example, the MAX603 is tested by measuring the $V_{OUT}$ at $V_{IN}$ = 7V, then $V_{IN}$ is lowered until $V_{OUT}$ falls 100mV below the measured value. The difference ($V_{IN}$ - $V_{OUT}$) is then measured and defined as $\Delta V_{DO}$.

**Note 4:** Foldback Current Limit was characterized by pulse testing to remain below the maximum junction temperature.

**Note 5:** The Reverse-Current Protection Threshold is the output/input differential voltage ($V_{OUT}$ - $V_{IN}$) at which reverse-current protection switchover occurs and the pass transistor is turned off.

**Note 6:** Noise is tested using a bandpass amplifier with two poles at 10Hz and two poles at 10kHz.

## Typical Operating Characteristics

($V_{IN}$ = 7V for MAX603, $V_{IN}$ = 5.3V for MAX604, $\overline{OFF}$ = $V_{IN}$, SET = GND, $C_{IN}$ = $C_{OUT}$ = 10µF, $R_L$ = 1kΩ, $T_J$ = +25°C, unless otherwise noted.)

**OUTPUT VOLTAGE vs. LOAD CURRENT**

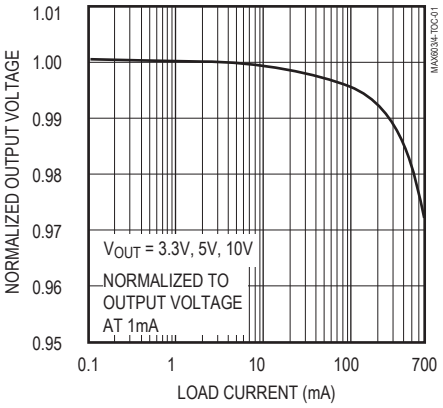


**QUIESCENT CURRENT vs. LOAD CURRENT**

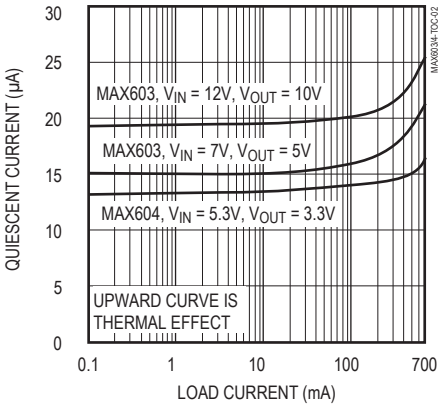


**OUTPUT VOLTAGE AND QUIESCENT CURRENT vs. SUPPLY VOLTAGE**

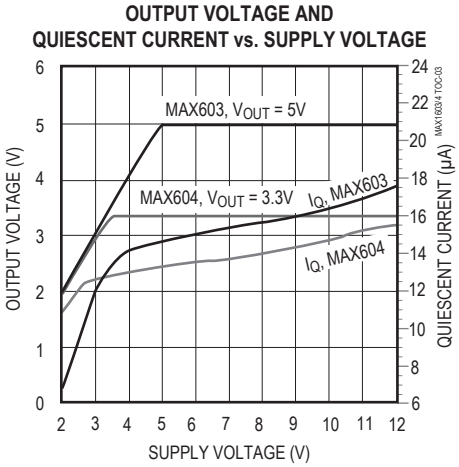


**OUTPUT VOLTAGE vs. TEMPERATURE**

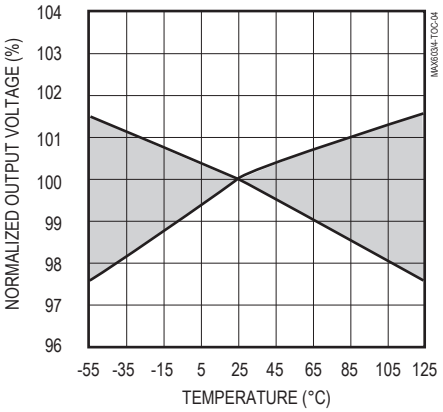


**QUIESCENT CURRENT vs. TEMPERATURE**

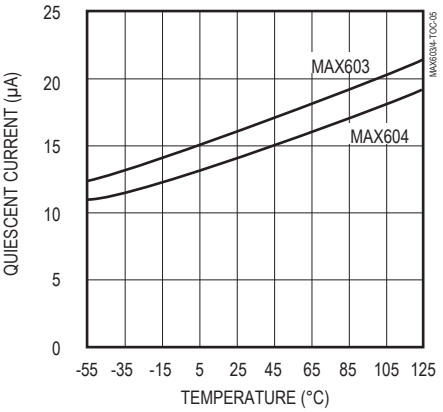


**DROPOUT VOLTAGE vs. LOAD CURRENT**

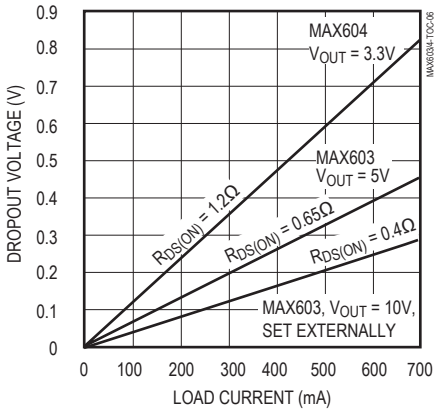


**10Hz TO 10kHz OUTPUT NOISE**

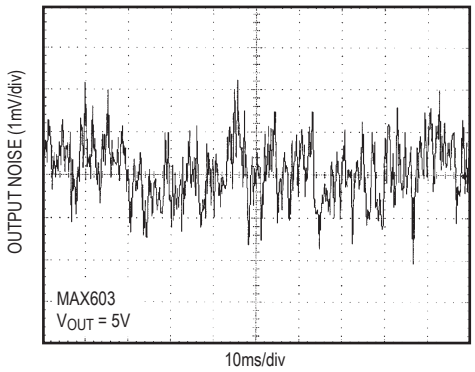


**LINE-TRANSIENT RESPONSE**

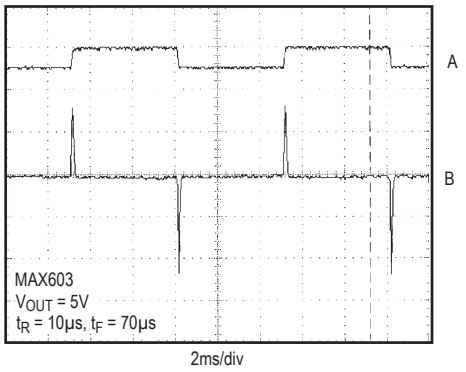


A: $V_{IN}$ = 8V (HIGH), $V_{IN}$ = 7V (LOW)
B: OUTPUT VOLTAGE (50mV/div)

## Typical Operating Characteristics (continued)

($V_{IN}$ = 7V for MAX603, $V_{IN}$ = 5.3V for MAX604, $\overline{OFF}$ = $V_{IN}$, SET = GND, $C_{IN}$ = $C_{OUT}$ = 10µF, $R_L$ = 1kΩ, $T_J$ = +25°C, unless otherwise noted.)

**LOAD-TRANSIENT RESPONSE**

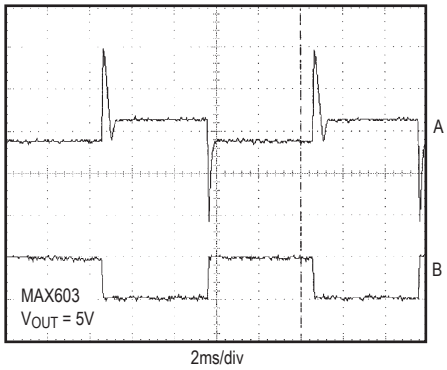


A: OUTPUT VOLTAGE (100mV/div)
B: $I_{OUT}$ = 500mA (HIGH), $I_{OUT}$ = 5mA (LOW)

**OVERSHOOT AND TIME EXITING SHUTDOWN MODE**

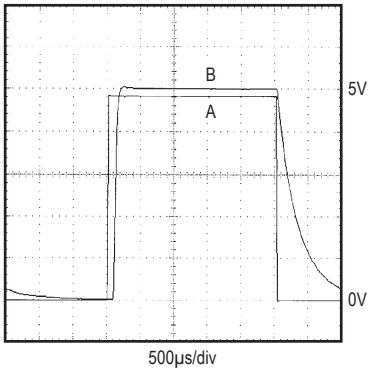


A: $\overline{OFF}$ PIN VOLTAGE (1V/div)
RISE TIME = 13µs
B: MAX603 OUTPUT VOLTAGE (1V/div)
DELAY = 4.936ms, OVERSHOOT = 1%, RISE TIME = 55µs

## Pin Description

| PIN | NAME | DESCRIPTION |
|---|---|---|
| 1 | IN | Regulator Input. Supply voltage can range from 2.7V to 11.5V. |
| 2, 3, 6, 7 | GND | Ground. These pins function as heatsinks, only in the SOIC package. All GND pins must be soldered to the circuit board for proper power dissipation. Connect to large copper pads or planes to channel heat from the IC. |
| 4 | $\overline{OFF}$ | Shutdown, active low. Switch logic levels in less than 1µs with the high level above the $\overline{OFF}$ threshold. |
| 5 | SET | Feedback for Setting the Output Voltage. Connect to GND to set the output voltage to the preselected 3.3V or 5V. Connect to an external resistor network for adjustable output operation. |
| 8 | OUT | Regulator Output. Fixed or adjustable from 1.25V to 11.0V. Sources up to 500mA for input voltages above 4V. |

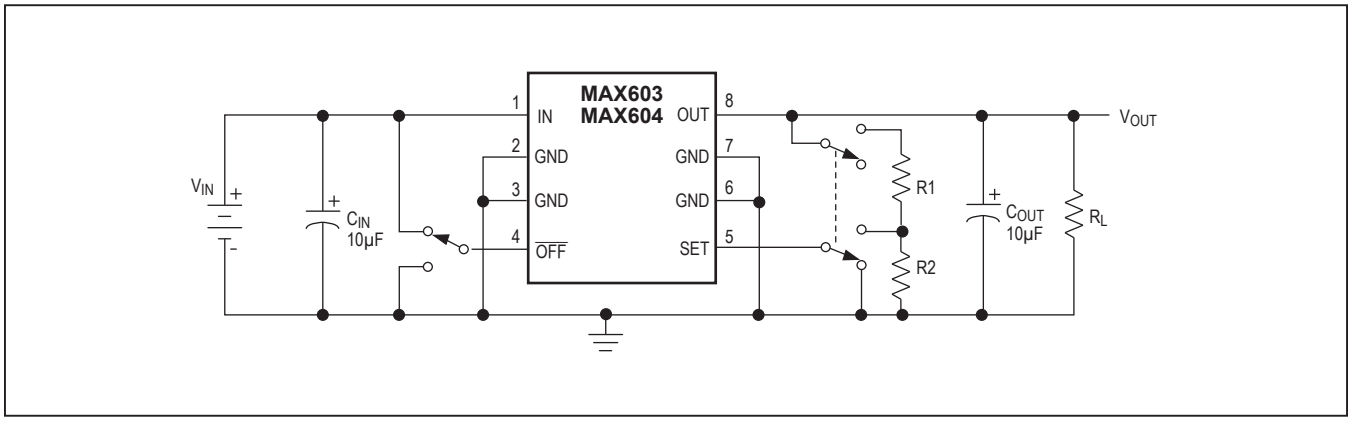


*Figure 1. Test Circuit*

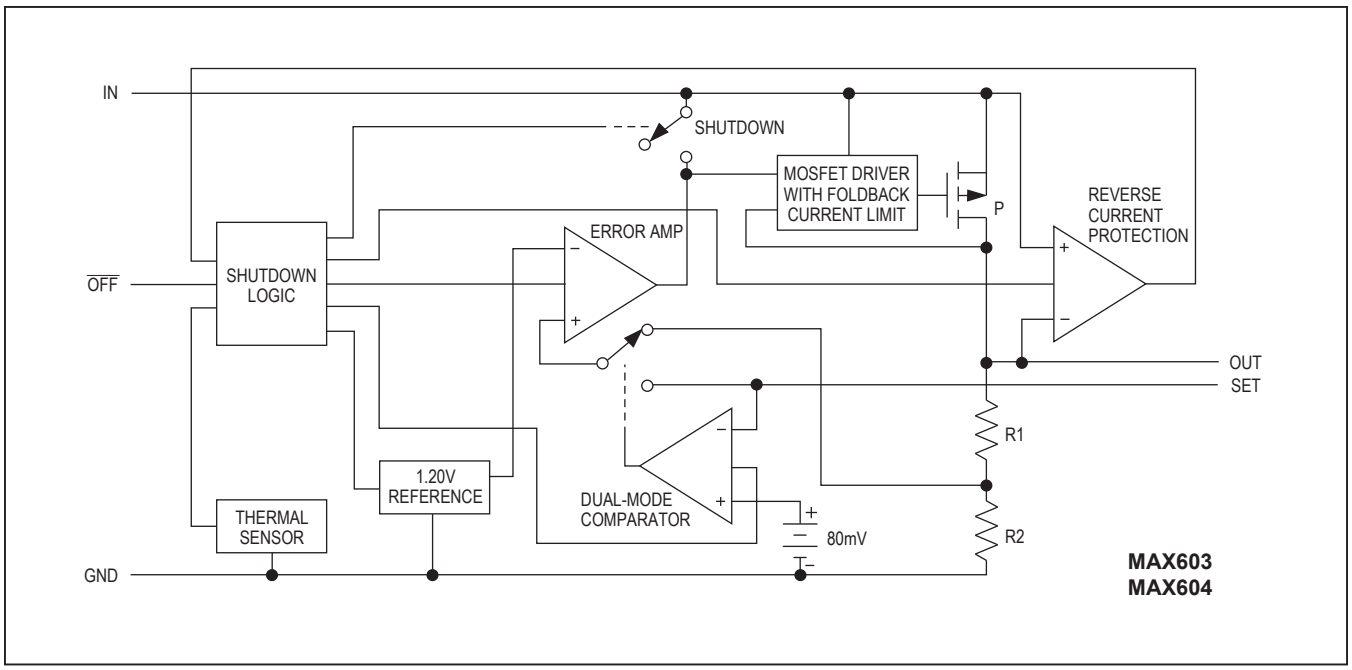


*Figure 2. Functional Diagram*

## Detailed Description

The MAX603/MAX604 are low-dropout, low-quiescent-current linear regulators designed primarily for battery-powered applications. They supply an adjustable 1.25V to 11V output or a preselected 5V (MAX603) or 3.3V (MAX604) output for load currents up to P-channel. As illustrated in Figure 2, they consist of a 1.20V reference, error amplifier, MOSFET driver, P-channel pass transistor, dual-mode comparator, and internal feedback voltage divider.

The 1.20V bandgap reference is connected to the error amplifier's inverting input. The error amplifier compares this reference with the selected feedback voltage and amplifies the difference. The MOSFET driver reads the error signal and applies the appropriate drive to the P-channel pass transistor. If the feedback voltage is lower than the reference, the pass transistor gate is pulled lower, allowing more current to pass and increasing the output voltage. If the feedback voltage is too high, the pass transistor gate is pulled up, allowing less current to pass to the output.

The output voltage is fed back through either an internal resistor voltage divider connected to the OUT pin, or an external resistor network connected to the SET pin. The dual-mode comparator examines the SET voltage and selects the feedback path used. If SET is below 80mV, internal feedback is used and the output voltage is regulated to 5V for the MAX603 or 3.3V for the MAX604. Additional blocks include a foldback current limiter, reverse current protection, thermal sensor, and shutdown logic.

### Internal P-Channel Pass Transistor

The MAX603/MAX604 feature a 500mA P-channel MOSFET pass transistor. This provides several advantages over similar designs using PNP pass transistors, including longer battery life.

The P-channel MOSFET requires no base drive, which reduces quiescent current considerably. PNP based regulators waste considerable amounts of current in dropout when the pass transistor saturates. They also use high base-drive currents under large loads. The MAX603/MAX604 do not suffer from these problems and consume only 15µA of quiescent current under light and heavy loads, as well as in dropout.

## Output Voltage Selection

The MAX603/MAX604 feature dual-mode operation. In preset voltage mode, the output of the MAX603 is set to 5V and the output of the MAX604 is set to 3.3V using internal, trimmed feedback resistors. Select this mode by connecting SET to ground.

In adjustable mode, an output between 1.25V and 11V is selected using two external resistors connected as a voltage divider to SET (Figure 3). The output voltage is set by the following equation:

$$V_{OUT} = V_{SET}\left(1 + \frac{R1}{R2}\right)$$

where $V_{SET}$ = 1.20V. To simplify resistor selection:

$$R1 = R2\left(\frac{V_{OUT}}{V_{SET}} - 1\right)$$

Since the input bias current at SET is nominally zero, large resistance values can be used for R1 and R2 to minimize power consumption without losing accuracy. Up to 1.5MΩ is acceptable for R2. Since the $V_{SET}$ tolerance is less than ±40mV, the output can be set using fixed resistors instead of trim pots.

In preset voltage mode, impedances between SET and ground should be less than 10kΩ. Otherwise, spurious conditions could cause the voltage at SET to exceed the 80mV dual-mode threshold.

## Shutdown

A low input on the $\overline{OFF}$ pin shuts down the MAX603/MAX604. In the off mode, the pass transistor, control circuit, reference, and all biases are turned off, reducing the supply current below 2µA. $\overline{OFF}$ should be connected to IN for normal operation.

Use a fast comparator, Schmitt trigger, or CMOS or TTL logic to drive the $\overline{OFF}$ pin in and out of shutdown. Rise times should be shorter than 1µs. Do not use slow RC circuits, leave $\overline{OFF}$ open, or allow the input to linger between thresholds; these measures will prevent the output from jumping to the positive supply rail in response to an indeterminate input state.

Since the $\overline{OFF}$ threshold varies with input supply voltage (see *Electrical Characteristics*), do not derive the drive voltage from 3.3V logic. With $V_{IN}$ at 11.5V, the high $\overline{OFF}$ logic level needs to be above 4V.

## Foldback Current Limiting

The MAX603/MAX604 also include a foldback current limiter. It monitors and controls the pass transistor's gate voltage, estimating the output current and limiting it to 1.2A for output voltages above 0.8V and $V_{IN}$ - $V_{OUT}$ > 0.7V. For $V_{IN}$ - $V_{OUT}$ < 0.7V (dropout operation), there is no current limit. If the output voltage drops below 0.8V, implying a short-circuit condition, the output current is limited to 350mA. The output can be shorted to ground for one minute without damaging the device if the package can dissipate $V_{IN}$ x 350mA without exceeding $T_J$ = +150°C.

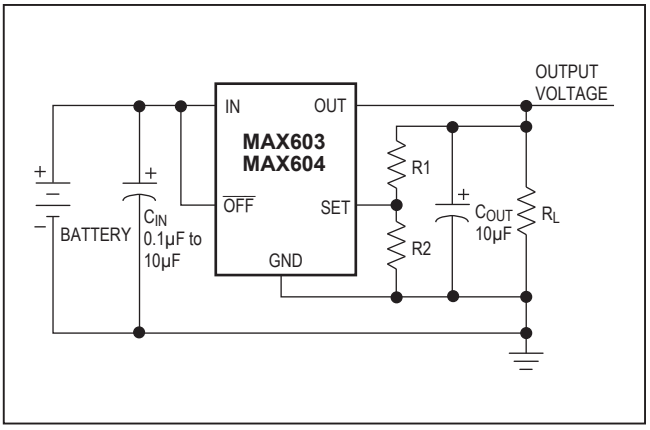


*Figure 3. Adjustable Output Using External Feedback Resistors*

## Thermal Overload Protection

Thermal overload protection limits total power dissipation in the MAX603/MAX604. When the junction temperature exceeds $T_J$ = +160°C, the thermal sensor sends a signal to the shutdown logic, turning off the pass transistor and allowing the IC to cool. The thermal sensor will turn the pass transistor on again after the IC's junction temperature cools by 10°C, resulting in a pulsed output during thermal overload conditions.

Thermal overload protection is designed to protect the MAX603/MAX604 in the event of fault conditions. For continual operation, the absolute maximum junction temperature rating of $T_J$ = +150°C should not be exceeded.

## Operating Region and Power Dissipation

Maximum power dissipation of the MAX603/MAX604 depends on the thermal resistance of the case and circuit board, the temperature difference between the die junction and ambient air, and the rate of air flow. The power dissipation across the device is P = $I_{OUT}$ ($V_{IN}$ - $V_{OUT}$). The resulting maximum power dissipation is:

$$P_{MAX} = \left(\frac{(T_J - T_A)}{(\theta_{JB} + \theta_{BA})}\right)$$

where ($T_J$ - $T_A$) is the temperature difference between the MAX603/MAX604 die junction and the surrounding air, $\theta_{JB}$

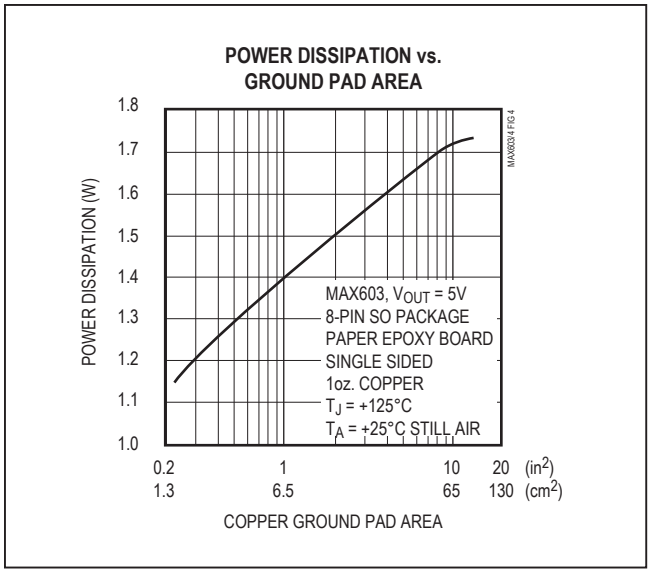


*Figure 4. Typical Maximum Power Dissipation vs. Ground Pad Size.*

(or $\theta_{JC}$) is the thermal resistance of the package chosen, and $\theta_{BA}$ is the thermal resistance through the printed circuit board, copper traces and other materials to the surrounding air. The 8-pin SOIC package for the MAX603/MAX604 features a special lead frame with a lower thermal resistance and higher allowable power dissipation. The thermal resistance of this package is $\theta_{JB}$ = 42°C/W, compared with $\theta_{JB}$ = 110°C/W for an 8-pin plastic DIP package and $\theta_{JB}$ = 125°C/W for an 8-pin ceramic DIP package.

The GND pins of the MAX603/MAX604 SOIC package perform the dual function of providing an electrical connection to ground and channeling heat away. Connect all GND pins to ground using a large pad or ground plane. Where this is impossible, place a copper plane on an adjacent layer. The pad should exceed the dimensions in Figure 4.

Figure 4 assumes the IC is an 8-pin SOIC package, is soldered directly to the pad, has a +125°C maximum junction temperature and a +25°C ambient air temperature, and has no other heat sources. Use larger pad sizes for other packages, lower junction temperatures, higher ambient temperatures, or conditions where the IC is not soldered directly to the heat-sinking ground pad.

The MAX603/MAX604 can regulate currents up to 500mA and operate with input voltages up to 11.5V, but not simultaneously. High output currents can only be sustained when input-output differential voltages are low, as shown

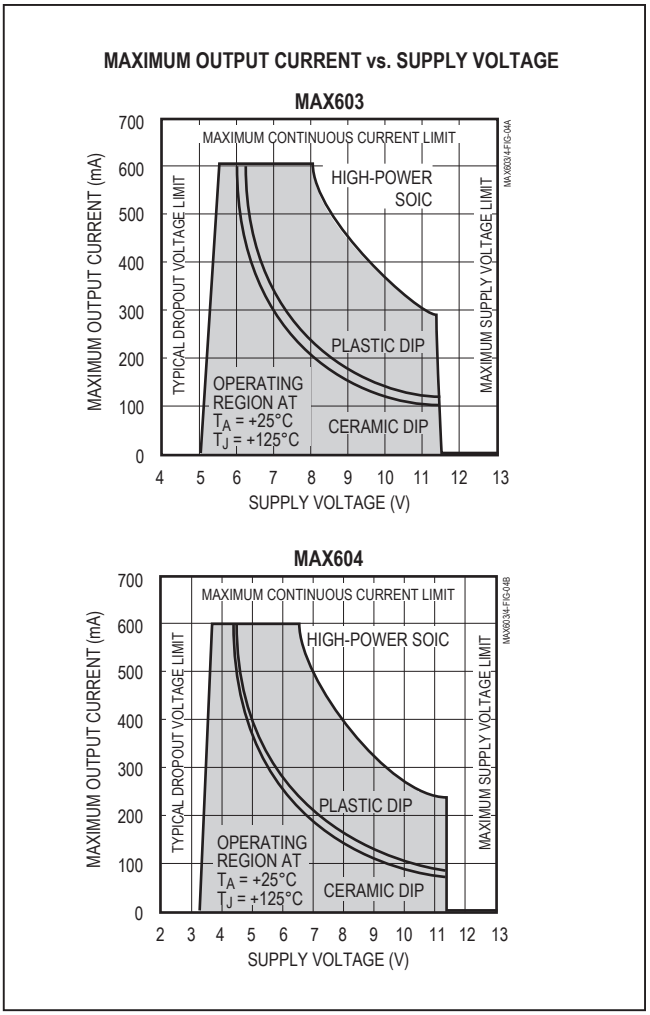


*Figure 5. Power Operating Regions: Maximum Output Current vs. Differential Supply Voltage*

in Figure 5. Maximum power dissipation depends on packaging, board layout, temperature, and air flow. The maximum output current is:

$$I_{OUT(max)} = \frac{P_{MAX} \times (T_J - T_A)}{(V_{IN} - V_{OUT}) \times 100°C}$$

where $P_{MAX}$ is derived from Figure 4.

## Reverse-Current Protection

The MAX603/MAX604 has a unique protection scheme that limits reverse currents when the input voltage falls below the output. It monitors the voltages on IN and OUT

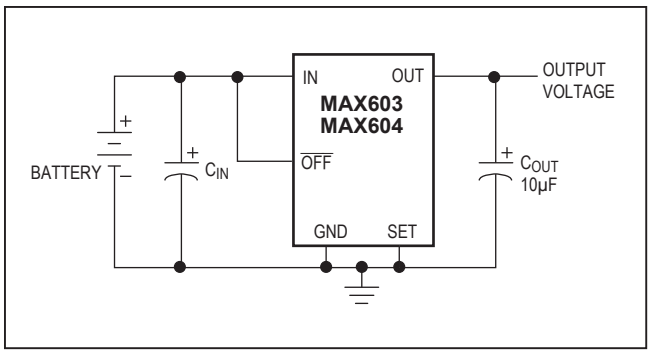


*Figure 6. 3.3V or 5V Linear-Regulator Application*

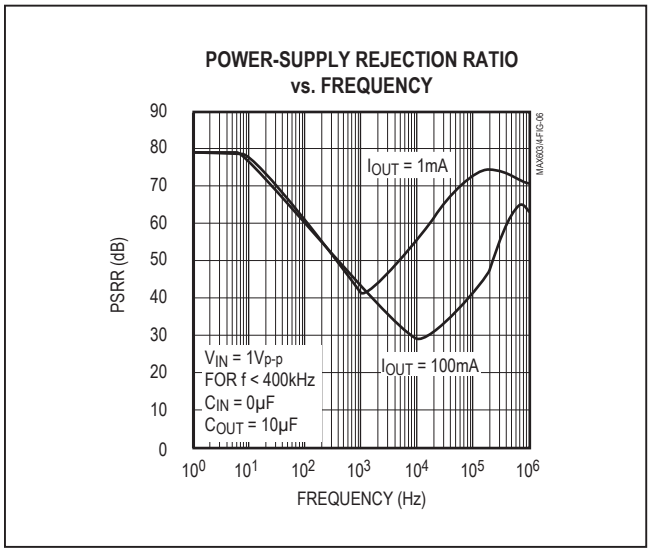


*Figure 7. Power-Supply Rejection Ratio vs. Ripple Frequency*

and switches the IC's substrate and power bus to the more positive of the two. The control circuitry can then remain functioning and turn the pass transistor off, limiting reverse currents back through the device. This feature allows a backup regulator or battery pack to maintain $V_{OUT}$ when the supply at IN fails.

Reverse-current protection activates when the voltage on IN falls 6mV (20mV maximum) below the voltage on OUT. Before this happens, currents as high as several milliamperes can flow back through the device. After switchover, typical reverse currents are limited to 0.01µA for as long as the condition exists.

## Applications Information

Figure 6 illustrates the typical application for the MAX603/MAX604.

### Capacitor Selection and Regulator Stability

Normally, use 0.1µF to 10µF capacitors on the input and 10µF on the output of the MAX603/MAX604. The larger input capacitor values provide better supply-noise rejection and line-transient response. Improve load-transient response, stability, and power-supply rejection by using large output capacitors. For stable operation over the full temperature range and with load currents up to 500mA, 10µF is recommended. Using capacitors smaller than 3.3µF can result in oscillation.

### Noise

The MAX603/MAX604 exhibit $3mV_{P-P}$ to $4mV_{P-P}$ of noise during normal operation. This is negligible in most applications. When using the MAX603/MAX604 in applications that include analog-to-digital converters of greater than 12 bits, consider the ADC's power-supply rejection specifications. Refer to the output noise plot in the *Typical Operating Characteristics*.

### PSRR and Operation from Sources Other than Batteries

The MAX603/MAX604 are designed to deliver low dropout voltages and low quiescent currents in battery-powered systems. Achieving these objectives requires trading off power-supply noise rejection and swift response to supply variations and load transients. Power-supply rejection is 80dB at low frequencies and rolls off above 10Hz. As the frequency increases above 10kHz, the output capacitor is the major contributor to the rejection of power-supply noise (Figure 7). Do not use power supplies with ripple above 100kHz, especially when the ripple exceeds $100mV_{P-P}$. When operating from sources other than batteries, improved supply-noise rejection and transient response can be achieved by increasing the values of the input and output capacitors, and through passive filtering techniques. The *Typical Operating Characteristics* show the MAX603/MAX604 supply and load-transient responses.

### Transient Considerations

The Typical Operating Characteristics show the MAX603/MAX604 load-transient response. Two components of the output response can be observed on the load-transient graphs—a DC shift from the output impedance due to the different load currents, and the transient response. Typical transients for step changes in the load current from 5mA to 500mA are 0.2V. Increasing the output capacitor's value attenuates transient spikes.

### Input-Output (Dropout) Voltage

A regulator's minimum input-output voltage differential, or dropout voltage, determines the lowest usable supply voltage. In battery-powered systems, this will determine the useful end-of-life battery voltage. Because the MAX603/MAX604 use a P-channel MOSFET pass transistor, their dropout voltage is a function of $r_{DS(ON)}$ multiplied by the load current (see *Electrical Characteristics*).

Quickly stepping up the input voltage from the dropout voltage can result in overshoot. This occurs when the pass transistor is fully on at dropout and the IC is not given time to respond to the supply voltage change. Prevent this by slowing the input voltage rise time.

## Chip Topography

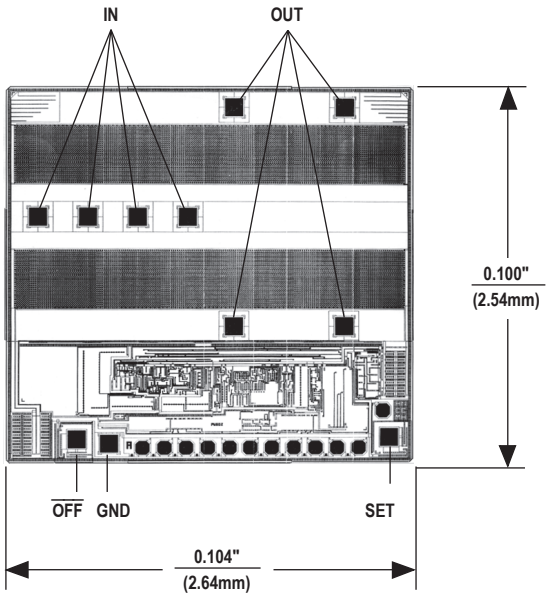


TRANSISTOR COUNT: 111

NO DIRECT SUBSTRATE CONNECTION. THE N-SUBSTRATE IS INTERNALLY SWITCHED BETWEEN THE MORE POSITIVE OF IN OR OUT.

## Package Information

For the latest package outline information and land patterns (footprints), go to **www.maximintegrated.com/packages**. Note that a "+", "#", or "-" in the package code indicates RoHS status only. Package drawings may show a different suffix character, but the drawing pertains to the package regardless of RoHS status.

| PACKAGE TYPE | PACKAGE CODE | OUTLINE NO. | LAND PATTERN NO. |
|---|---|---|---|
| 8 PDIP | P8+3 | 21-0043 | — |
| 8 SOIC | S8-7F | 21-0041 | 90-0096 |
| 8 CDIP | J8-3 | — | – |

## Ordering Information

| PART | TEMP. RANGE | PIN-PACKAGE |
|---|---|---|
| **MAX603**CPA | 0°C to +70°C | 8 Plastic DIP |
| MAX603CSA | 0°C to +70°C | 8 SO |
| MAX603C/D | 0°C to +70°C | Dice* |
| MAX603EPA | -40°C to +85°C | 8 Plastic DIP |
| MAX603ESA | -40°C to +85°C | 8 SO |
| MAX603MSA/PR+T | -55°C to +125°C | 8 SO |
| **MAX604**CPA | 0°C to +70°C | 8 Plastic DIP |
| MAX604CSA | 0°C to +70°C | 8 SO |
| MAX604C/D | 0°C to +70°C | Dice* |
| MAX604EPA | -40°C to +85°C | 8 Plastic DIP |
| MAX604ESA | -40°C to +85°C | 8 SO |

** Dice are tested at $T_A$ = +25°C, DC parameters only.*

*** Contact factory for availability.*

## Revision History

| REVISION NUMBER | REVISION DATE | DESCRIPTION | PAGES CHANGED |
|---|---|---|---|
| 0 | 9/94 | Initial Release | — |
| 1 | 4/17 | Updated *Ordering Information* table | 10 |

For pricing, delivery, and ordering information, please contact Maxim Direct at 1-888-629-4642, or visit Maxim Integrated's website at www.maximintegrated.com.

*Maxim Integrated cannot assume responsibility for use of any circuitry other than circuitry entirely embodied in a Maxim Integrated product. No circuit patent licenses are implied. Maxim Integrated reserves the right to change the circuitry and specifications without notice at any time. The parametric values (min and max limits) shown in the Electrical Characteristics table are guaranteed. Other parametric values quoted in this data sheet are provided for guidance.*