MAX6225/MAX6241/MAX6250

Low-Noise, Precision, +2.5V/+4.096V/+5V Voltage References

General Description

The MAX6225/MAX6241/MAX6250 are low-noise, precision voltage references with extremely low 1ppm/°C temperature coefficients and excellent ±0.02% initial accuracy. These devices feature buried-zener technology for lowest noise performance. Load-regulation specifications are guaranteed for source and sink currents up to 15mA. Excellent line and load regulation and low output impedance at high frequency make them ideal for high-resolution data-conversion systems up to 16 bits.

The MAX6225 is set for 2.500V output, the MAX6241 is set for 4.096V output, and the MAX6250 is set for 5.000V output. All three devices provide for the option of external trimming and noise reduction.

Applications

- High-Resolution Analog-to-Digital and Digital-to-Analog Converters
- High-Accuracy Reference Standard
- High-Accuracy Industrial and Process Control
- Digital Voltmeters
- ATE Equipment
- Precision Current Sources

Features

- Low 1.0ppm/°C Temperature Coefficient
- Very Low 1.5µV_{P-P} Noise (0.1Hz to 10Hz)
- ±0.02% Initial Accuracy
- ±15mA Output Source and Sink Current
- Low, 18mW Power Consumption (MAX6225)
- Industry-Standard Pinout
- Optional Noise Reduction and Voltage Trim
- Excellent Transient Response
- 8-Pin SO Package Available
- Low 20ppm/1000h Long-Term Stability
- Stable for All Capacitive Loads

Ordering Information

PART	TEMPERATURE RANGE	PIN-PACKAGE	MAX TEMPCO (ppm/°C)
MAX6225ACPA+	0°C to +70°C	8 Plastic DIP	2.0
MAX6225BCPA+	0°C to +70°C	8 Plastic DIP	5.0
MAX6225ACSA+	0°C to +70°C	8 SO	2.0
MAX6225BCSA+	0°C to +70°C	8 SO	5.0
MAX6225AEPA+	-40°C to +85°C	8 Plastic DIP	3.0
MAX6225BEPA+	-40°C to +85°C	8 Plastic DIP	7.0
MAX6225AESA+	-40°C to +85°C	8 SO	5.0
MAX6225BESA+	-40°C to +85°C	8 SO	7.0
MAX6225AMJA	-55°C to +125°C	8 CERDIP	5.0
MAX6225BMJA	-55°C to +125°C	8 CERDIP	8.0

+Denotes a lead(Pb)-free/RoHS-compliant package.

***Ordering Information* continues at end of data sheet.**

Typical Operating Circuit

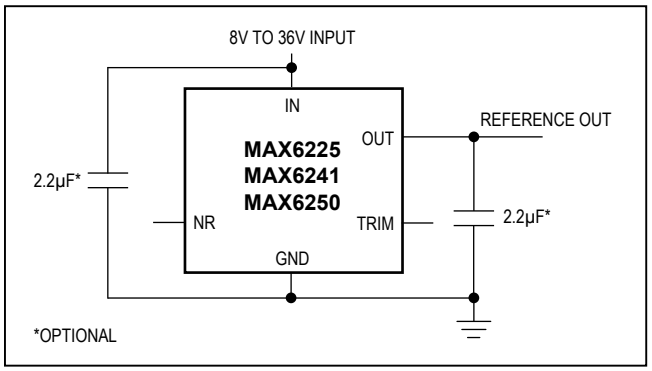

Pin Configuration

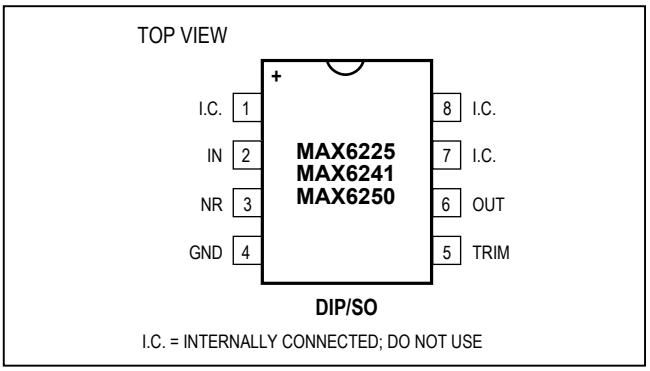

maxim integrated™

Absolute Maximum Ratings

(Voltages Referenced to GND)
IN.....-0.3V to +40V
OUT, TRIM .....-0.3V to +12V
NR .....-0.3V to +6V
OUT Short-Circuit to GND Duration (V_{IN} ≤ 12V).....Continuous
OUT Short-Circuit to GND Duration (V_{IN} ≤ 40V) 5s
OUT Short-Circuit to IN Duration (V_{IN} ≤ 12V) .....Continuous
Continuous Power Dissipation (T_A = +70°C)
8-Pin Plastic DIP (derate 9.09mW/°C above +70°C)...727mW
8-Pin SO (derate 5.88mW/°C above +70°C).....471mW
8-Pin CERDIP (derate 8.00mW/°C above +70°C).....640mW
Operating Temperature Ranges
MAX62_ _ _C_ A.....0°C to +70°C
MAX62_ _ _E_ A.....-40°C to +85°C
MAX62_ _ _MJA.....-55°C to +125°C
Storage Temperature Range .....-65°C to +150°C
Lead Temperature (soldering, 10s).....+300°C
Soldering Temperature (reflow)
8 PDIP, 8 SOIC.....+260°C
8 CDIP.....+240°C

Stresses beyond those listed under "Absolute Maximum Ratings" may cause permanent damage to the device. These are stress ratings only, and functional operation of the device at these or any other conditions beyond those indicated in the operational sections of the specifications is not implied. Exposure to absolute maximum rating conditions for extended periods may affect device reliability.

Electrical Characteristics—MAX6225

(V_{IN} = +10V, I_{OUT} = 0mA, T_A = T_{MIN} to T_{MAX}, unless otherwise noted. Typical values are at T_A = +25°C.)

PARAMETER	SYMBOL	CONDITIONS	T_A	MIN	TYP	MAX	UNITS
Input Voltage Range	V_{IN}		C, E, M	8		36	V
Output Voltage	V_{OUT}	MAX6225A	+25°C	2.499	2.500	2.501	V
		MAX6225B	+25°C	2.497	2.500	2.503	
Output Voltage Temperature Coefficient (Note 1)	TCV_{OUT}	MAX6225AC_A	C		1.0	2.0	ppm/°C
		MAX6225AE_A	E		1.5	3.0	
		MAX6225AMJA	M		2.0	5.0	
		MAX6225BC_A	C		2.5	5.0	
		MAX6225BE_A	E		2.5	7.0	
		MAX6225BMJA	M		2.5	8.0	
Line Regulation (Note 2)	ΔV_{OUT} / ΔV_{IN}	8V ≤ V_{IN} ≤ 10V	+25°C		10	18	ppm/V
			C			30	
			E			35	
			M			45	
		10V ≤ V_{IN} ≤ 36V	+25°C		2	5	
			C			7	
			E			8	
			M			10	

Electrical Characteristics—MAX6225 (continued)

(V_{IN} = +10V, I_{OUT} = 0mA, T_A = T_{MIN} to T_{MAX}, unless otherwise noted. Typical values are at T_A = +25°C.)

PARAMETER	SYMBOL	CONDITIONS	T_A	MIN	TYP	MAX	UNITS
Load Regulation (Note 2)	ΔV_{OUT} / ΔI_{OUT}	Sourcing: 0mA ≤ I_{OUT} ≤ 15mA	C		1	6	ppm/mA
			E		1	7	
			M		3	15	
		Sinking: -15mA ≤ I_{OUT} ≤ 0mA	C		1	6	
			E		1	7	
			M		10	30	
Supply Current	I_{IN}		+25µC		1.8	2.7	mA
			C, E, M			3.0	
Trim-Adjustment Range	ΔV_{OUT}	Figure 1	C, E, M	±15	±25		mV
Turn-On Settling Time	t_{ON}	To ±0.01% of final value	+25°C		5		µs
Output Noise Voltage (Note 3)	en	0.1Hz ≤ f ≤ 10Hz	+25°C		1.5		µVp-p
		10Hz ≤ f ≤ 1kHz	+25°C		1.3	2.8	µVRMS
Temperature Hysteresis		(Note 4)	+25°C		20		ppm
Long-Term Stability	ΔV_{OUT} / t		+25°C		20		ppm/ 1000h

Electrical Characteristics—MAX6241

(V_{IN} = +10V, I_{OUT} = 0mA, T_A = T_{MIN} to T_{MAX}, unless otherwise noted. Typical values are at T_A = +25°C.)

PARAMETER	SYMBOL	CONDITIONS	TA	MIN	TYP	MAX	UNITS
Input Voltage Range	V_{IN}		C, E, M	8		36	V
Output Voltage	V_{OUT}	MAX6241A	+25°C	4.095	4.096	4.097	V
		MAX6241B	+25°C	4.092	4.096	4.100	
Output Voltage Temperature Coefficient (Note 1)	TCV_{OUT}	MAX6241AC_A	C		1.0	2.0	ppm/°C
		MAX6241AE_A	E		1.5	3.0	
		MAX6241AMJA	M		2.0	5.0	
		MAX6241BC_A	C		2.5	5.0	
		MAX6241BE_A	E		2.5	7.0	
		MAX6241BMJA	M		2.5	8.0	
Line Regulation (Note 2)	ΔV_{OUT} / ΔV_{IN}	8V ≤ V_{IN} ≤ 10V	+25°C		10	18	ppm/V
			C			30	
			E			35	
			M			45	
		10V ≤ V_{IN} ≤ 36V	+25°C		2	5	
			C			7	
			E			8	
			M			10	
Load Regulation (Note 2)	ΔV_{OUT} / ΔI_{OUT}	Sourcing: 0mA ≤ I_{OUT} ≤ 15mA	C		1	6	ppm/mA
			E		1	7	
			M		3	9	
		Sinking: -15mA ≤ I_{OUT} ≤ 0mA	C		1	6	
			E		1	7	
			M		7	18	
Supply Current	I_{IN}		+25µC		1.9	2.9	mA
			C, E, M			3.2	
Trim-Adjustment Range	ΔV_{OUT}	Figure 1	C, E, M	±24	±40		mV
Turn-On Settling Time	t_{ON}	To ±0.01% of final value	+25°C		8		µs
Output Noise Voltage (Note 3)	en	0.1Hz ≤ f ≤ 10Hz	+25°C		2.4		µVp-p
		10Hz ≤ f ≤ 1kHz	+25°C		2.0	4.0	µVRMS
Temperature Hysteresis		(Note 4)	+25°C		20		ppm
Long-Term Stability	ΔV_{OUT} / t		+25°C		20		ppm/ 1000h

Electrical Characteristics—MAX6250

(V_{IN} = +10V, I_{OUT} = 0mA, T_A = T_{MIN} to T_{MAX}, unless otherwise noted. Typical values are at T_A = +25°C.)

PARAMETER	SYMBOL	CONDITIONS	TA	MIN	TYP	MAX	UNITS
Input Voltage Range	V_{IN}		C, E, M	8		36	V
Output Voltage	V_{OUT}	MAX6250A	+25°C	4.999	5.000	5.001	V
		MAX6250B	+25°C	4.995	5.000	5.005	
Output Voltage Temperature Coefficient (Note 1)	TCV_{OUT}	MAX6250AC_A	C		1.0	2.0	ppm/°C
		MAX6250AE_A	E		1.5	3.0	
		MAX6250AMJA	M		2.0	5.0	
		MAX6250BC_A	C		2.5	5.0	
		MAX6250BE_A	E		2.5	7.0	
		MAX6250BMJA	M		2.5	8.0	
Line Regulation (Note 2)	ΔV_{OUT} / ΔV_{IN}	8V ≤ V_{IN} ≤ 10V	+25°C		10	18	ppm/V
			C			30	
			E			35	
			M			45	
		10V ≤ V_{IN} ≤ 36V	+25°C		2	5	
			C			7	
			E			8	
			M			10	
Load Regulation (Note 2)	ΔV_{OUT} / ΔI_{OUT}	Sourcing: 0mA ≤ I_{OUT} ≤ 15mA	C		1	6	ppm/mA
			E		1	7	
			M		3	9	
		Sinking: -15mA ≤ I_{OUT} ≤ 0mA	C		1	6	
			E		1	7	
			M		6	15	
Supply Current	I_{IN}		+25µC		2.0	3.0	mA
			C, E, M			3.3	
Trim-Adjustment Range	ΔV_{OUT}	Figure 1	C, E, M	±30	±50		mV
Turn-On Settling Time	t_{ON}	To ±0.01% of final value	+25°C		10		µs
Output Noise Voltage (Note 3)	en	0.1Hz ≤ f ≤ 10Hz	+25°C		3.0		µVp-p
		10Hz ≤ f ≤ 1kHz	+25°C		2.5	5.0	µVRMS
Temperature Hysteresis		(Note 4)	+25°C		20		ppm
Long-Term Stability	ΔV_{OUT} / t		+25°C		20		ppm/ 1000h

Note 1: Temperature coefficient is measured by the box method; i.e., the maximum ΔV_{OUT} is divided by ΔT x V_{OUT}.

Note 2: Line regulation (ΔV_{OUT} / (V_{OUT} x ΔV_{IN})) and load regulation (ΔV_{OUT}/(V_{OUT} x ΔI_{OUT})) are measured with pulses and do not include output voltage changes due to die-temperature changes.

Note 3: Noise specifications are 100% tested for the 10Hz to 1kHz bandwidth. Contact factory for 100% noise testing in the 0.1Hz to 10Hz bandwidth.

Note 4: Temperature hysteresis is specified at T_A = +25°C by measuring V_{OUT} before and after changing temperature by +25°C using the PDIP package.

Typical Operating Characteristics

(V_{IN} = 10V, I_{OUT} = 0mA, T_A = +25°C, unless otherwise noted.)

MAX6250
NORMALIZED OUTPUT VOLTAGE
vs. TEMPERATURE

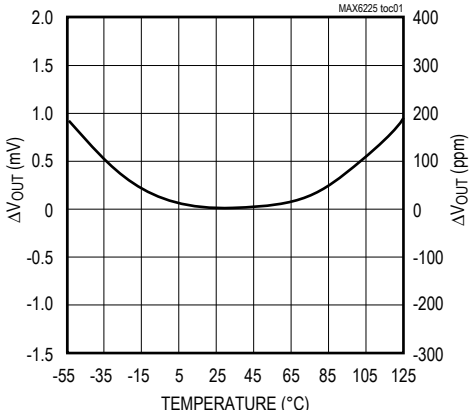

MAX6241
NORMALIZED OUTPUT VOLTAGE
vs. TEMPERATURE

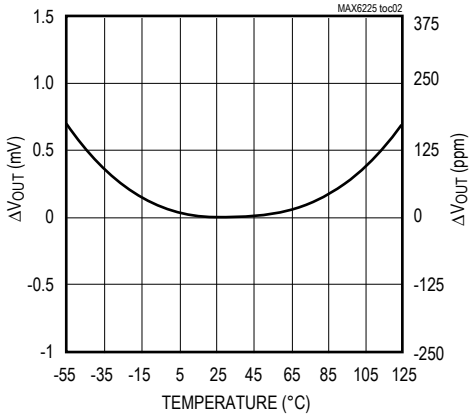

MAX6225
NORMALIZED OUTPUT VOLTAGE
vs. TEMPERATURE

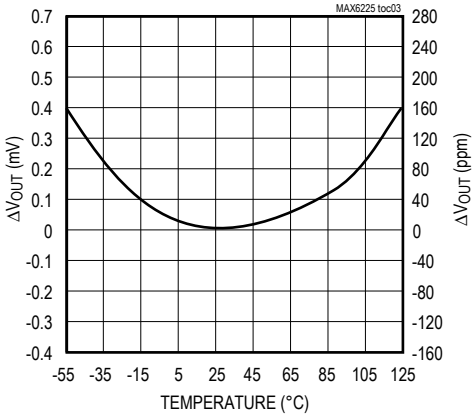

MAX6250
CHANGE IN OUTPUT VOLTAGE
vs. OUTPUT CURRENT

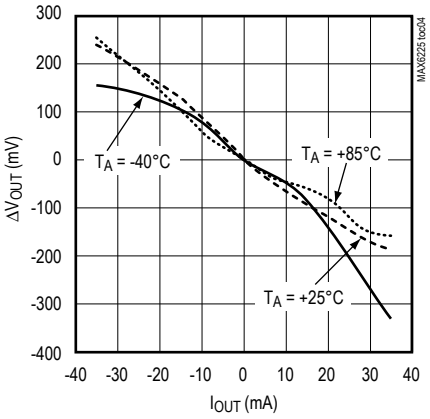

MAX6241
CHANGE IN OUTPUT VOLTAGE
vs. OUTPUT CURRENT

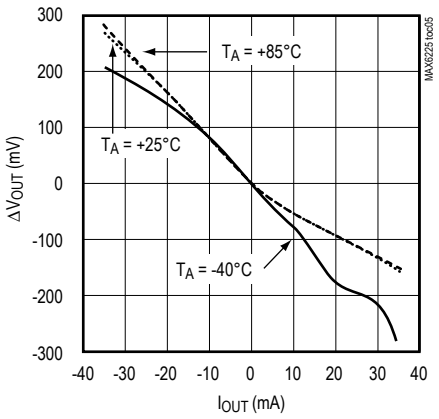

MAX6225
CHANGE IN OUTPUT VOLTAGE
vs. OUTPUT CURRENT

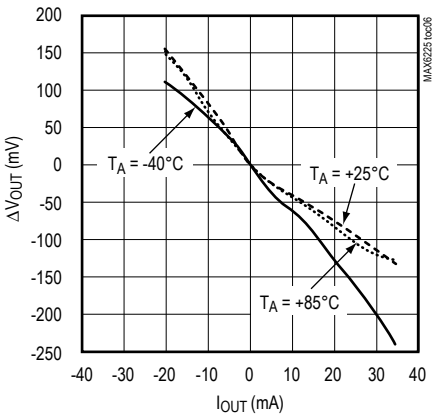

CHANGE IN OUTPUT VOLTAGE
vs. INPUT VOLTAGE

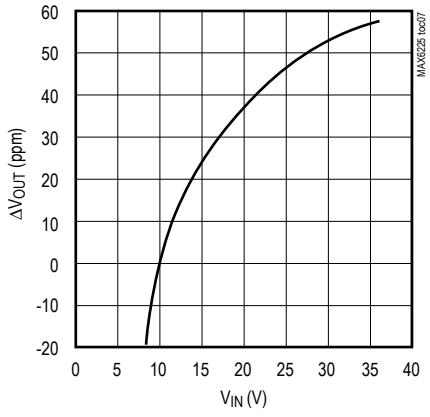

SUPPLY CURRENT vs. SUPPLY VOLTAGE

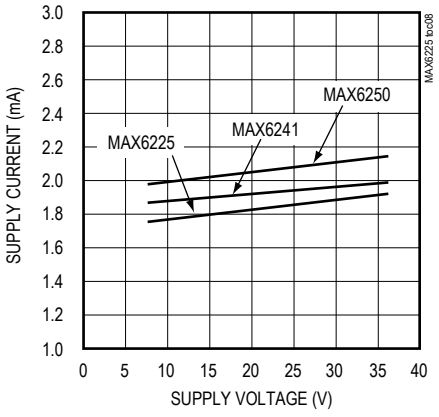

SUPPLY CURRENT vs. TEMPERATURE

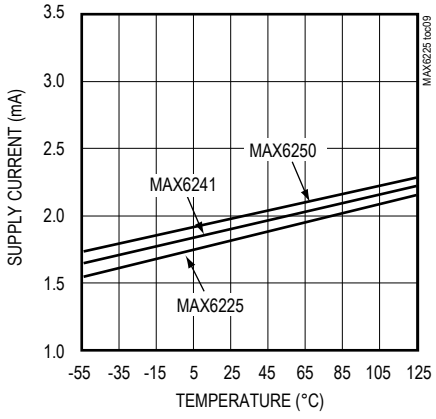

Typical Operating Characteristics (continued)

(V_{IN} = 10V, I_{OUT} = 0mA, T_A = +25°C, unless otherwise noted.)

MAX6225
OUTPUT NOISE-VOLTAGE
DENSITY vs. FREQUENCY

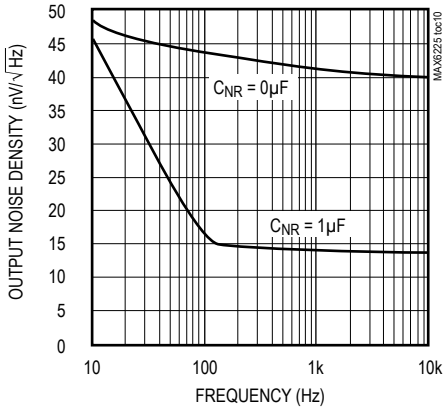

MAX6241
OUTPUT NOISE-VOLTAGE
DENSITY vs. FREQUENCY

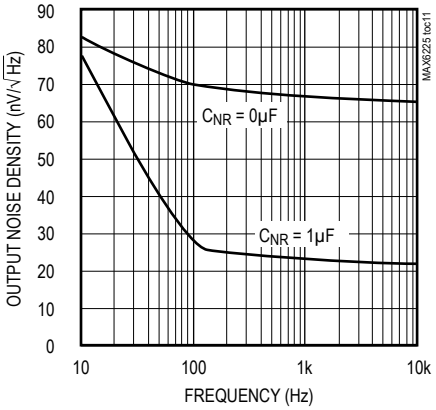

MAX6250
OUTPUT NOISE-VOLTAGE
DENSITY vs. FREQUENCY

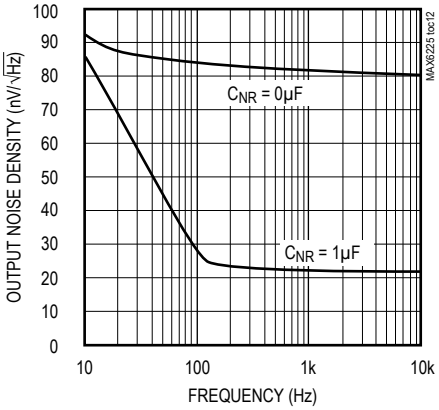

MAX6225
0.1Hz to 10Hz NOISE

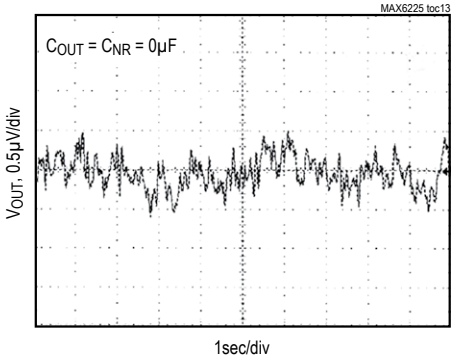

MAX6241
0.1Hz to 10Hz NOISE

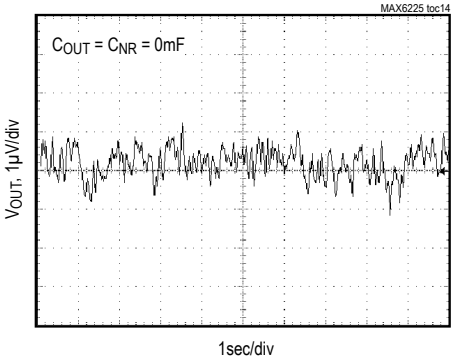

MAX6250
0.1Hz to 10Hz NOISE

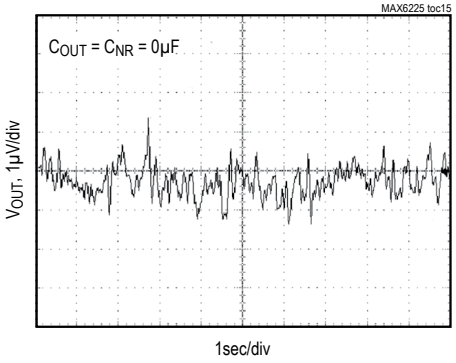

OUTPUT IMPEDANCE vs. FREQUENCY

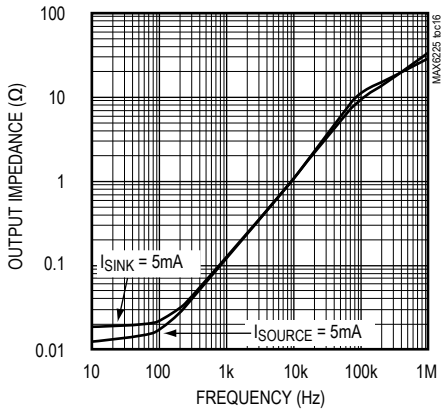

RIPPLE REJECTION
vs. FREQUENCY (C_{NR} = 1µF)

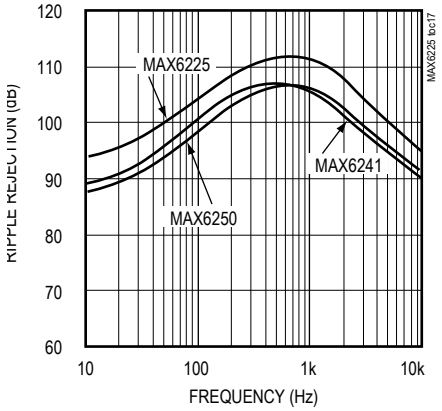

RIPPLE REJECTION
vs. FREQUENCY (C_{NR} = 0µF)

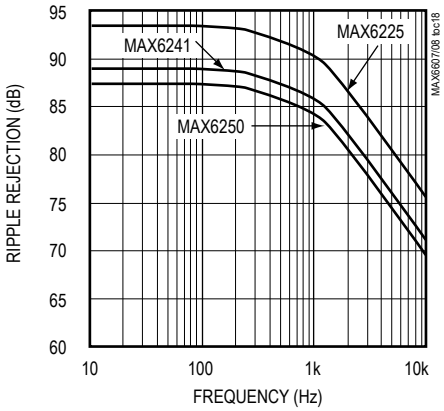

Typical Operating Characteristics (continued)

(V_{IN} = 10V, I_{OUT} = 0mA, T_A = +25°C, unless otherwise noted.)

LOAD-TRANSIENT RESPONSE (SOURCING)

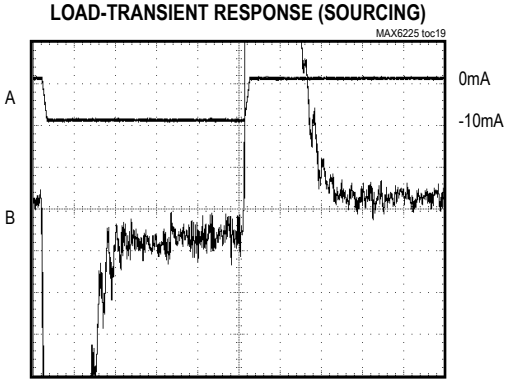

A: I_{OUT}, 10mA/div (SOURCING)
B: V_{OUT}, 500µV/div

LOAD-TRANSIENT RESPONSE (SINKING)

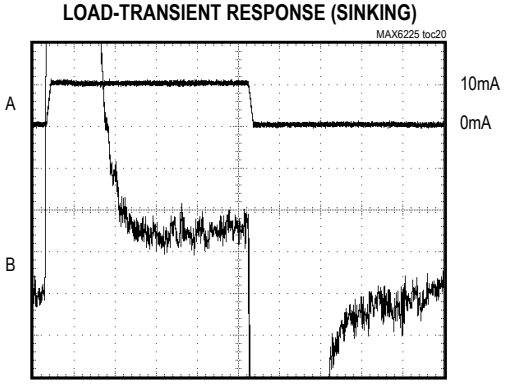

A: I_{OUT}, 10mA/div (SINKING)
B: V_{OUT}, 500µV/div

LOAD-TRANSIENT RESPONSE

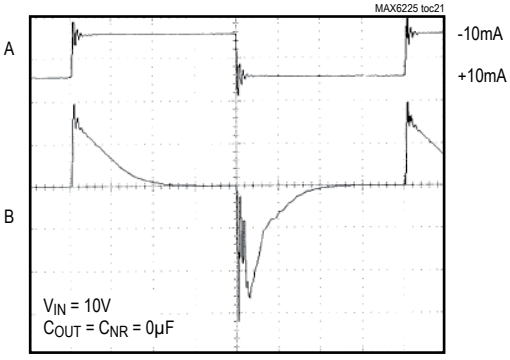

A: I_{OUT} (10mA SOURCE AND SINK), 20mA/div, AC COUPLED
B: V_{OUT}, 20mV/div, AC COUPLED

MAX6225
TURN-ON AND TURN-OFF TRANSIENT RESPONSE

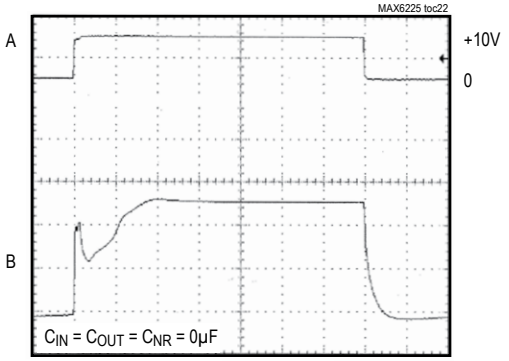

A: V_{IN}, 10V/div
B: V_{OUT}, 1V/div

MAX6241
TURN-ON AND TURN-OFF TRANSIENT RESPONSE

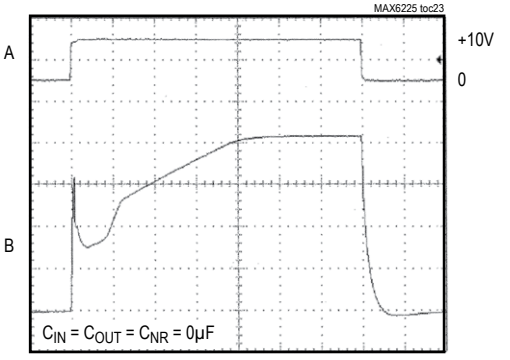

A: V_{IN}, 10V/div
B: V_{OUT}, 1V/div

MAX6250
TURN-ON AND TURN-OFF TRANSIENT RESPONSE

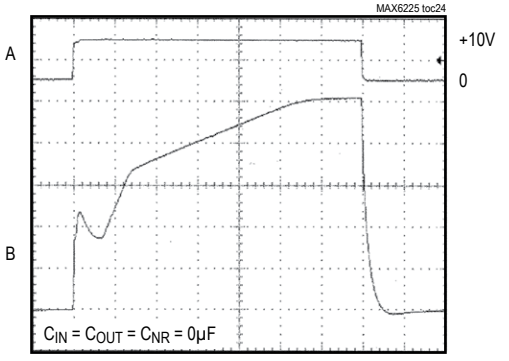

A: V_{IN}, 10V/div
B: V_{OUT}, 1V/div

Pin Description

PIN	NAME	FUNCTION
1, 7, 8	I.C.	Internally Connected. **Do not use**.
2	IN	Positive Power-Supply Input
3	NR	Noise Reduction. Optional capacitor connection for wideband noise reduction. Leave open if not used (Figure 2).
4	GND	Ground
5	TRIM	External Trim Input. Allows ±1% output adjustment (Figure 1). Leave open if not used.
6	OUT	Voltage Reference Output

Detailed Description

Temperature Stability

The MAX6225/MAX6241/MAX6250 are highly stable, low-noise voltage references that use a low-power temperature-compensation scheme to achieve laboratory-standard temperature stability. This produces a nearly flat temperature curve, yet does not require the power associated with heated references.

The output voltage can be trimmed a minimum of 0.6% by connecting a 10kΩ potentiometer between OUT and GND, and connecting its tap to the TRIM pin, as shown in Figure 1. The external trimming does not affect temperature stability.

Noise Reduction

To augment wideband noise reduction, add a 1µF capacitor to the NR pin (Figure 2). Larger values do not improve noise appreciably (see *Typical Operating Characteristics*).

Noise in the power-supply input can affect output noise, but can be reduced by adding an optional bypass capacitor to the IN pin and GND.

Bypassing

The MAX6225/MAX6241/MAX6250 are stable with capacitive load values from 0µF to 100µF, for all values of load current. Adding an output bypass capacitor can help reduce noise and output glitching caused by load transients.

Applications Information

Negative Regulator

Figure 3 shows how both a +5V and -5V precision reference can be obtained from a single unregulated +5V supply. A MAX681 generates approximately ±9V to operate the MAX6250 reference and MAX432 inverting amplifier. The +5V is inverted by the MAX432 chopper-stabilized amplifier. Resistor R1 is optional, and may be used to trim the ±5V references. R2 and R4 should be matched, both in absolute resistance and temperature coefficient. R3 is optional, and is adjusted to set the -5V reference.

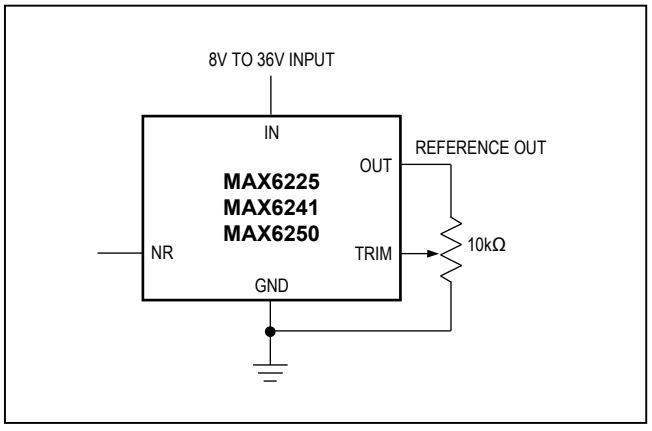

Figure 1. Output Voltage Adjustment

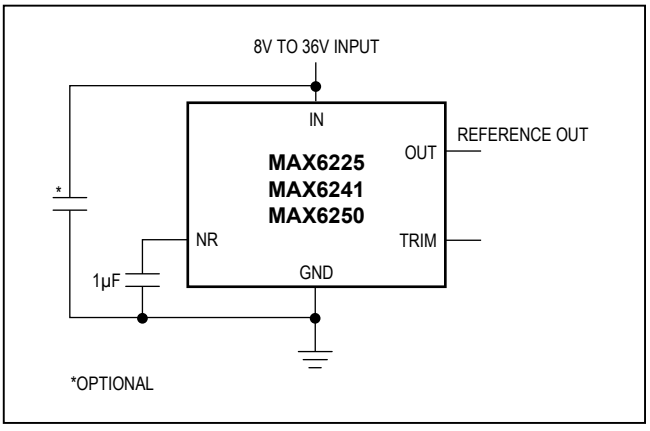

Figure 2. Noise-Reduction Capacitor

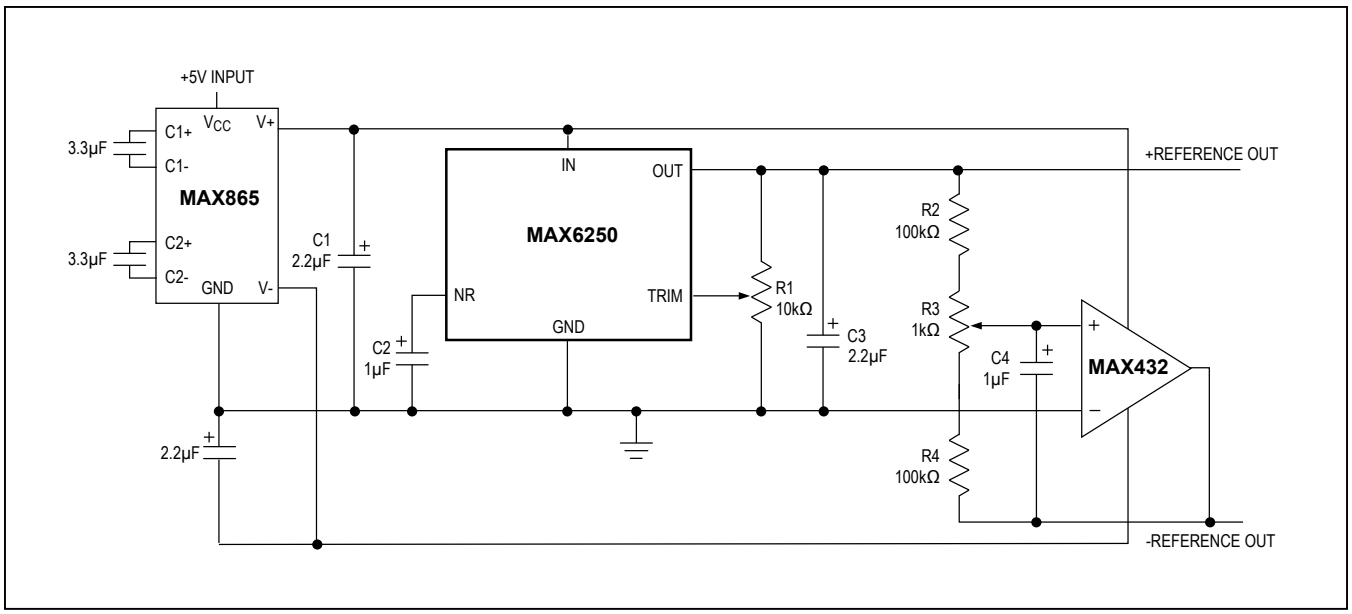

Figure 3. +5V and -5V References from a Single +5V Supply

Ordering Information (continued)

PART	TEMP RANGE	PIN-PACKAGE	MAX TEMPCO (ppm/°C)
MAX6241ACPA+	0°C to +70°C	8 Plastic DIP	2.0
MAX6241BCPA+	0°C to +70°C	8 Plastic DIP	5.0
MAX6241ACSA+	0°C to +70°C	8 SO	2.0
MAX6241BCSA+	0°C to +70°C	8 SO	5.0
MAX6241AEPA+	-40°C to +85°C	8 Plastic DIP	3.0
MAX6241BEPA+	-40°C to +85°C	8 Plastic DIP	7.0
MAX6241AESA+	-40°C to +85°C	8 SO	3.0
MAX6241BESA+	-40°C to +85°C	8 SO	7.0
MAX6241AMJA	-55°C to 125°C	8 CERDIP	5.0
MAX6241BMJA	-55°C to +125°C	8 CERDIP	8.0
MAX6250ACPA+	0°C to +70°C	8 Plastic DIP	2.0
MAX6250BCPA+	0°C to +70°C	8 Plastic DIP	5.0
MAX6250ACSA+	0°C to +70°C	8 SO	2.0
MAX6250BCSA+	0°C to +70°C	8 SO	5.0
MAX6250AEPA+	-40°C to +85°C	8 Plastic DIP	3.0
MAX6250BEPA+	-40°C to +85°C	8 Plastic DIP	7.0
MAX6250AESA+	-40°C to +85°C	8 SO	3.0
MAX6250BESA+	-40°C to +85°C	8 SO	7.0
MAX6250AMJA	-55°C to +125°C	8 CERDIP	5.0
MAX6250BMJA	-55°C to +125°C	8 CERDIP	8.0

+Denotes a lead(Pb)-free/RoHS-compliant package.

Chip Information

PROCESS: CMOS

Package Information

For the latest package outline information and land patterns (footprints), go to **www.maximintegrated.com/packages**. Note that a "+", "#", or "-" in the package code indicates RoHS status only. Package drawings may show a different suffix character, but the drawing pertains to the package regardless of RoHS status.

PACKAGE TYPE	PACKAGE CODE	OUTLINE NO.	LAND PATTERN NO.
8 SO	S8+5	21-0041	90-0096
8 PDIP	P8+3	21-0043	–
8 CERDIP	J8-2	21-0045	–

Revision History

REVISION NUMBER	REVISION DATE	DESCRIPTION	PAGES CHANGED
0	9/96	Initial release	—
4	1/01	Updated *Electrical Characteristics* Note 3	5
5	3/14	Added lead-free notation to *Ordering Information* and updated *Package Information*	1, 10
6	6/19	Updated the unit for TOC19 and TOC20 to the *Typical Operating Characteristics*	8

For pricing, delivery, and ordering information, please visit Maxim Integrated's online storefront at https://www.maximintegrated.com/en/storefront/storefront.html.

Maxim Integrated cannot assume responsibility for use of any circuitry other than circuitry entirely embodied in a Maxim Integrated product. No circuit patent licenses are implied. Maxim Integrated reserves the right to change the circuitry and specifications without notice at any time. The parametric values (min and max limits) shown in the Electrical Characteristics table are guaranteed. Other parametric values quoted in this data sheet are provided for guidance.