MAX6326/MAX6327/ MAX6328/MAX6346/ MAX6347/MAX6348

3-Pin, Ultra-Low-Power SC70/SOT µP Reset Circuits

General Description

The MAX6326/MAX6327/MAX6328/MAX6346/MAX6347/MAX6348 microprocessor (µP) supervisory circuits monitor the power supplies in µP and digital systems. These devices provide excellent circuit reliability and low cost by eliminating external components and adjustments when used with 2.5V, 3V, 3.3V, and 5V powered circuits.

These circuits perform a single function: they assert a reset signal whenever the V_{CC} supply voltage declines below a preset threshold, keeping it asserted for at least 100ms after V_{CC} has risen above the reset threshold. The only difference between the devices is their output. The MAX6326/MAX6346 (push-pull) and MAX6328/MAX6348 (open-drain) have an active-low reset output. The MAX6327/MAX6347 have an active-high push-pull reset output. All of these parts are guaranteed to be in the correct state for V_{CC} down to 1V. The reset comparator is designed to ignore fast transients on V_{CC}. Reset thresholds are factory-trimmable between 2.2V and 4.63V, in approximately 100mV increments. Twenty-one standard versions are available. Contact the factory for availability of nonstandard versions.

Ultra-low supply currents (1µA max for the MAX6326/MAX6327/MAX6328) make these parts ideal for use in portable equipment. All six devices are available in space-saving SOT23 and SC70 packages.

Applications

- Computers
- Intelligent Instruments
- Controllers
- Critical µP and µC
- Power Monitoring
- Portable/Battery-Powered Equipment

Pin Configuration

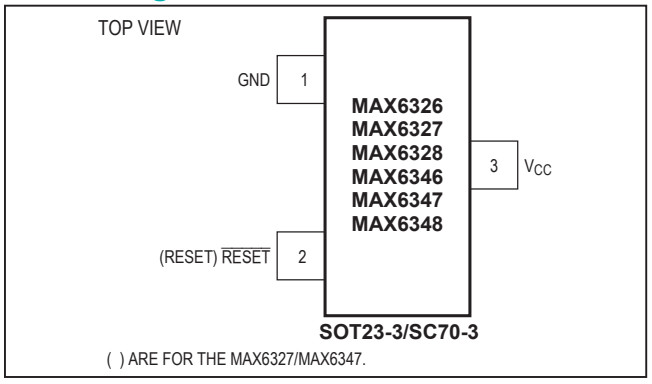

Features

- Ultra-Low 1µA (max) Supply Current (MAX6326/MAX6327/MAX6328)
- Precision Monitoring of 2.5V, 3V, 3.3V, and 5V Power-Supply Voltages
- Reset Thresholds Available from 2.2V to 4.63V
- Fully Specified Over Temperature
- 100ms (min) Power-On Reset Pulse Width
- Low Cost
- Available in Three Versions: Push-Pull $\overline{\text{RESET}}$, Push-Pull RESET, and Open-Drain $\overline{\text{RESET}}$
- Power-Supply Transient Immunity
- No External Components
- 3-Pin SC70/SOT23 Packages
- Pin Compatible with MAX803/MAX809/MAX810

Ordering Information

PART†	TEMP. RANGE	PIN-PACKAGE
MAX6326XR_ _-T	-40°C to +85°C	3 SC70-3
MAX6326UR_ _-T	-40°C to +85°C	3 SOT23-3
MAX6327XR_ _-T	-40°C to +85°C	3 SC70-3
MAX6327UR_ _-T	-40°C to +85°C	3 SOT23-3
MAX6328XR_ _-T	-40°C to +85°C	3 SC70-3
MAX6328UR_ _-T	-40°C to +85°C	3 SOT23-3
MAX6346XR_ _-T	-40°C to +85°C	3 SC70-3
MAX6346UR_ _-T	-40°C to +85°C	3 SOT23-3
MAX6347XR_ _-T	-40°C to +85°C	3 SC70-3
MAX6347UR_ _-T	-40°C to +85°C	3 SOT23-3
MAX6348XR_ _-T	-40°C to +85°C	3 SC70-3
MAX6348UR_ _-T	-40°C to +85°C	3 SOT23-3

†The MAX6326/MAX6327/MAX6328/MAX6346/MAX6347/MAX6348 are available in factory-set V_{CC} reset thresholds from 2.2V to 4.63V, in approximately 0.1V increments. Choose the desired reset-threshold suffix from Table 1 and insert it in the blank spaces following "R". There are 21 standard versions with a required order increment of 2500 pieces. Sample stock is generally held on the standard versions only (see the Selector Guide). Required order increment is 10,000 pieces for nonstandard versions (Table 2). Contact factory for availability. All devices available in tape-and-reel only.
Devices are available in both leaded and lead-free packaging. Specify lead-free by replacing "-T" with "+T" when ordering.

Selector Guide appears at end of data sheet.

maxim integrated™

Absolute Maximum Ratings

Terminal Voltage (with respect to GND)
V_{CC} .....-0.3V to +6V
$\overline{RESET}$, RESET (push-pull).....-0.3V to (V_{CC} + 0.3V)
$\overline{RESET}$ (open drain).....-0.3V to +6V
Input Current (V_{CC}) 20mA
Output Current (RESET, $\overline{RESET}$) 20mA
Rate of Rise (V_{CC}) 100V/µs

Continuous Power Dissipation (T_A = +70°C)
3-Pin SC70 (derate 2.7mW/°C above +70°C).....174mW
3-Pin SOT23 (derate 4mW/°C above +70°C) 320mW
Operating Temperature Range..... -40°C to +85°C
Storage Temperature Range..... -65°C to +150°C
Lead Temperature (soldering, 10s) .....+300°C

Stresses beyond those listed under "Absolute Maximum Ratings" may cause permanent damage to the device. These are stress ratings only, and functional operation of the device at these or any other conditions beyond those indicated in the operational sections of the specifications is not implied. Exposure to absolute maximum rating conditions for extended periods may affect device reliability.

Electrical Characteristics

(V_{CC} = full range, T_A = -40°C to +85°C, unless otherwise noted. Typical values are at T_A = +25°C and V_{CC} = 3V.) (Note 1)

PARAMETER	SYMBOL	CONDITIONS		MIN	TYP	MAX	UNITS
V_{CC} Range		T_A = 0°C to +70°C		1.0		5.5	V
		T_A = -40°C to +85°C		1.2		5.5	
Supply Current	I_{CC}	MAX632_ only, V_{CC} = 3.0V for V_{TH} ≤ 2.93V, V_{CC} = 3.2V for V_{TH} > 2.93V, no load			0.5	1.0	µA
		V_{CC} = 5.5V, no load			1.0	1.75	
Reset Threshold	V_{TH}	Table 1	T_A = +25°C	V_{TH} - 1.5%	V_{TH}	V_{TH} + 1.5%	V
			T_A = -40°C to +85°C	V_{TH} - 2.5%	V_{TH}	V_{TH} + 2.5%	
Reset Threshold Tempco	ΔV_{TH}/°C				40		ppm/°C
V_{CC} to Reset Delay		V_{CC} = V_{TH} to (V_{TH} - 100mV)			20		µs
Reset Active Timeout Period				100	185	280	ms
$\overline{RESET}$ Output Voltage (MAX6326/MAX6328/ MAX6346/MAX6348)	V_{OL}	I_{SINK} = 1.6mA, V_{CC} > 2.1V, reset asserted				0.3	V
		I_{SINK} = 100µA, V_{CC} ≥ 1.2V, reset asserted				0.4	
$\overline{RESET}$ Output Voltage (MAX6326/MAX6346)	V_{OH}	I_{SOURCE} = 500µA, V_{CC} = 3.2V, MAX6326 only		0.8 · V_{CC}			V
		I_{SOURCE} = 800µA, V_{CC} = 4.5V, V_{TH} ≤ 4.38V		0.8 · V_{CC}			
		I_{SOURCE} = 800µA, V_{CC} = $V_{TH(MAX)}$, V_{TH} ≥ 4.5V		0.8 · V_{CC}			
RESET Output Voltage (MAX6327/MAX6347)	V_{OH}	I_{SOURCE} = 500µA, V_{CC} ≥ 2.1V, reset asserted		0.8 · V_{CC}			V
		I_{SOURCE} = 50µA, V_{CC} ≥ 1.2V, reset asserted		0.8 · V_{CC}			
	V_{OL}	I_{SINK} = 1.2mA, V_{CC} ≥ 3.2V, reset not asserted, MAX6327 only				0.3	
		I_{SINK} = 3.2mA, V_{CC} ≥ 4.5V, reset not asserted, V_{TH} ≤ 4.38V				0.4	
		I_{SINK} = 3.2mA, V_{CC} = $V_{TH(MAX)}$, V_{TH} ≥ 4.5V				0.4	
RESET Threshold Hysteresis		MAX6326/MAX6327/MAX6328			6.3		mV
		MAX6346/MAX6347/MAX6348			9.5		
Open-Drain $\overline{RESET}$ Output Leakage Current						0.1	µA

Note 1: Overtemperature limits are guaranteed by design and not production tested.

Typical Operating Characteristics

(T_A = +25°C, unless otherwise noted.)

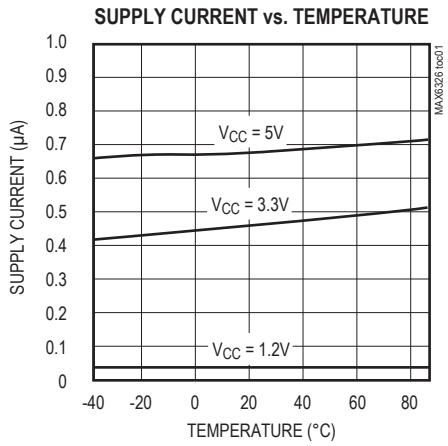

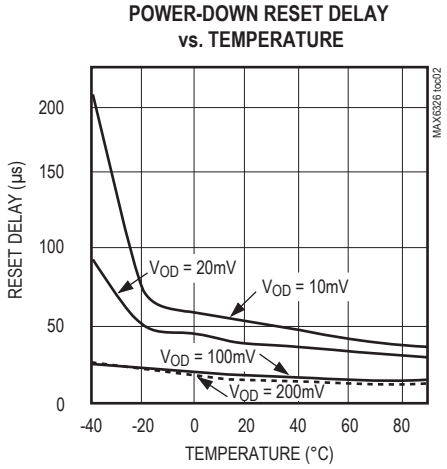

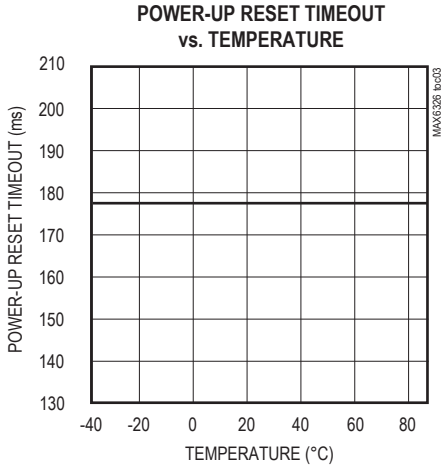

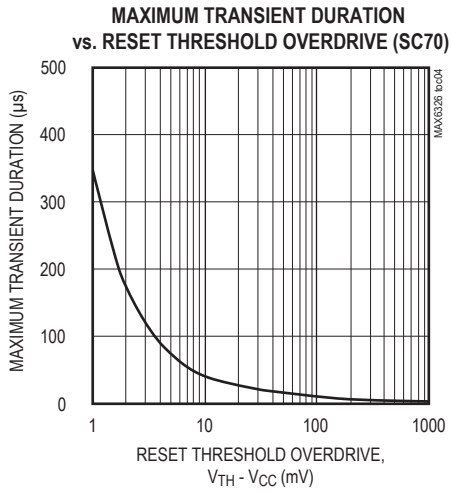

Pin Description

PIN		NAME	FUNCTION
MAX6326/MAX6346 MAX6328/MAX6348	MAX6327 MAX6347		
1	1	GND	Ground
2	—	$\overline{\text{RESET}}$	Active-Low Reset Output. $\overline{\text{RESET}}$ remains low while V_{CC} is below the reset threshold and for at least 100ms after V_{CC} rises above the reset threshold. $\overline{\text{RESET}}$ is open-drain on the MAX6328/MAX6348 and push-pull on the MAX6326/MAX6346.
—	2	RESET	Active-High Reset Output. RESET remains high while V_{CC} is below the reset threshold and for at least 100ms after V_{CC} rises above the reset threshold.
3	3	V_{CC}	Supply Voltage

Applications Information

Interfacing to µPs with Bidirectional Reset Pins

Since the $\overline{\text{RESET}}$ output on the MAX6328/MAX6348 is open drain, these devices interface easily with microprocessors (µPs) that have bidirectional reset pins, such as the Motorola 68HC11. Connecting the µP supervisor's $\overline{\text{RESET}}$ output directly to the microcontroller's (µC's) $\overline{\text{RESET}}$ pin with a single pull-up resistor allows either device to assert reset (Figure 1).

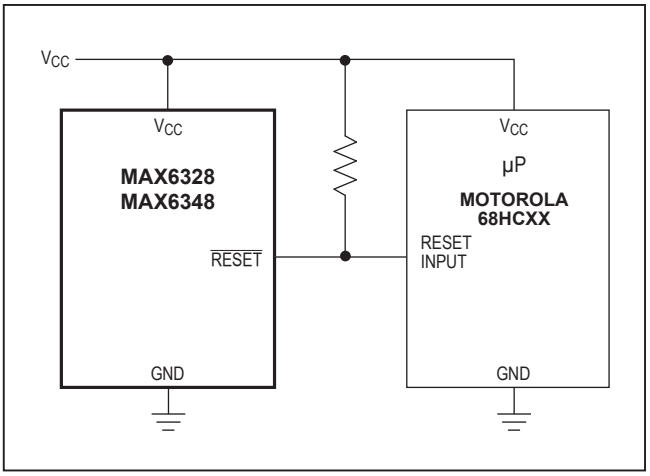

Figure 1. Interfacing to µPs with Bidirectional Reset Pins

Negative-Going V_{CC} Transients

In addition to issuing a reset to the µP during power-up, power-down, and brownout conditions, these devices are relatively immune to short-duration, negative-going V_{CC} transients (glitches).

The *Typical Operating Characteristics* show the Maximum Transient Duration vs. Reset Threshold Overdrive graph, for which reset pulses are not generated. The graph shows the maximum pulse width that a negative-going V_{CC} transient may typically have when issuing a reset signal. As the amplitude of the transient increases, the maximum allowable pulse width decreases.

Table 1. Factory-Trimmed Reset Thresholds‡

PART	SUFFIX	RESET THRESHOLD VOLTAGE, V_{TH} (V)				
		T_A = +25°C			T_A = -40°C to +85°C	
		MIN	TYP	MAX	MIN	MAX
MAX632_ _R	22	2.167	2.200	2.233	2.145	2.250
MAX632_ _R	23	2.285	2.320	2.355	2.262	2.375
MAX632_ _R	24	2.364	2.400	2.436	2.340	2.460
MAX632_ _R	25	2.462	2.500	2.537	2.437	2.562
MAX632_ _R	26	2.591	2.630	2.669	2.564	2.696
MAX632_ _R	27	2.660	2.700	2.741	2.633	2.768
MAX632_ _R	28	2.758	2.800	2.842	2.730	2.870
MAX632_ _R	29	2.886	2.930	2.974	2.857	3.000
MAX632_ _R	30	2.955	3.000	3.045	2.925	3.075
MAX632_ _R	31	3.034	3.080	3.126	3.003	3.150
MAX634_ _R	33	3.250	3.300	3.350	3.217	3.383
MAX634_ _R	34	3.349	3.400	3.451	3.315	3.485
MAX634_ _R	35	3.447	3.500	3.552	3.412	3.587
MAX634_ _R	36	3.546	3.600	3.654	3.510	3.690
MAX634_ _R	37	3.644	3.700	3.755	3.607	3.792
MAX634_ _R	38	3.743	3.800	3.857	3.705	3.895

‡Factory-trimmed reset thresholds are available in approximately 100mV increments with a 1.5% room-temperature variance.

Table 1. Factory-Trimmed Reset Thresholds‡ (continued)

PART	SUFFIX	RESET THRESHOLD VOLTAGE, V_{TH} (V)				
		T_A = +25°C			T_A = -40°C to +85°C	
		MIN	TYP	MAX	MIN	MAX
MAX634_ _R	39	3.841	3.900	3.958	3.802	3.997
MAX634_ _R	40	3.940	4.000	4.060	3.900	4.100
MAX634_ _R	41	4.038	4.100	4.161	3.997	4.202
MAX634_ _R	42	4.137	4.200	4.263	4.095	4.305
MAX634_ _R	43	4.235	4.300	4.364	4.192	4.407
MAX634_ _R	44	4.314	4.380	4.446	4.270	4.489
MAX634_ _R	45	4.432	4.500	4.567	4.387	4.612
MAX634_ _R	46	4.560	4.630	4.699	4.514	4.746

‡Factory-trimmed reset thresholds are available in approximately 100mV increments with a 1.5% room-temperature variance.

Table 2. Device Marking Codes and Minimum Order Increments

PART	TOP MARK		ORDER INCREMENT(k)
	SOT23	SC70	
MAX6346_R46-T	FZBI	ACO	2.5
MAX6346_R45-T	FZBH	–	10
MAX6346_R44-T	FZBG	ACK	2.5
MAX6346_R43-T	FZBF	–	10
MAX6346_R42-T	FZBE	–	10
MAX6346_R41-T	FZBD	–	10
MAX6346_R40-T	FZBC	–	10
MAX6346_R39-T	FZBB	–	10
MAX6346_R38-T	FZBA	–	10
MAX6346_R37-T	FZAZ	–	10
MAX6346_R36-T	FZAY	–	10
MAX6346_R35-T	FZAX	–	10
MAX6346_R34-T	FZAW	–	10
MAX6346_R33-T	FZAV	–	10
MAX6326_R31-T	FDAA	ACE	2.5
MAX6326_R30-T	FEAA	–	10
MAX6326_R29-T	FCAA	ACP	2.5
MAX6326_R28-T	FBAA	–	10
MAX6326_R27-T	FAAA	–	10
MAX6326_R26-T	EZAA	ACI	2.5
MAX6326_R25-T	EYAA	–	10
MAX6326_R24-T	EXAA	–	10
MAX6326_R23-T	EWAA	ACH	2.5
MAX6326_R22-T	EHAA	AAH	2.5

PART	TOP MARK		ORDER INCREMENT (k)
	SOT23	SC70	
MAX6347_R46-T	FZBW	ACF	2.5
MAX6347_R45-T	FZBV	–	10
MAX6347_R44-T	FZBU	ACL	2.5
MAX6347_R43-T	FZBT	–	10
MAX6347_R42-T	FZBS	–	10
MAX6347_R41-T	FZBR	–	10
MAX6347_R40-T	FZBQ	–	10
MAX6347_R39-T	FZBP	–	10
MAX6347_R38-T	FZBO	–	10
MAX6347_R37-T	FZBN	–	10
MAX6347_R36-T	FZBM	–	10
MAX6347_R35-T	FZBL	–	10
MAX6347_R34-T	FZBK	–	10
MAX6347_R33-T	FZBJ	–	10
MAX6327_R31-T	FMAA	ACT	2.5
MAX6327_R30-T	FNAA	–	10
MAX6327_R29-T	FLAA	ACS	2.5
MAX6327_R28-T	FKAA	–	10
MAX6327_R27-T	FJAA	–	10
MAX6327_R26-T	FIAA	ACR	2.5
MAX6327_R25-T	FHAA	–	10
MAX6327_R24-T	FGAA	–	10
MAX6327_R23-T	FFAA	ACQ	2.5
MAX6327_R22-T	EIAA	AAI	2.5

Table 2. Device Marking Codes and Minimum Order Increments (continued)

PART	TOP MARK		ORDER INCREMENT (k)
	SOT23	SC70	
MAX6348_R46-T	SOT23	SC70	
MAX6348_R46-T	FZCK	ACN	2.5
MAX6348_R45-T	FZCJ	–	10
MAX6348_R44-T	FZCI	ACM	2.5
MAX6348_R43-T	FZCH	–	10
MAX6348_R42-T	FZCG	–	10
MAX6348_R41-T	FZCF	–	10
MAX6348_R40-T	FZCE	–	10
MAX6348_R39-T	FZCD	–	10
MAX6348_R38-T	FZCC	–	10
MAX6348_R37-T	FZCB	–	10
MAX6348_R36-T	FZCA	–	10
MAX6348_R35-T	FZBZ	–	10
MAX6348_R34-T	FZBY	–	10
MAX6348_R33-T	FZBX	–	10
MAX6328_R31-T	FVAA	ACW	2.5
MAX6328_R30-T	FWAA	–	10
MAX6328_R29-T	FUAA	ACV	2.5
MAX6328_R28-T	FTAA	–	10
MAX6328_R27-T	FSAA	–	10
MAX6328_R26-T	FRAA	ACJ	2.5
MAX6328_R25-T	FQAA	–	10
MAX6328_R24-T	FPAA	–	10
MAX6328_R23-T	FOAA	ACU	2.5
MAX6328_R22-T	EJAA	AAJ	2.5

Selector Guide (standard versions*)

PART	NOMINAL V_{TH} (V)
MAX634_ _R46-T	4.63
MAX634_ _R44-T	4.38
MAX632_ _R31-T	3.08
MAX632_ _R29-T	2.93
MAX632_ _R26-T	2.63
MAX632_ _R23-T	2.32
MAX632_ _R22-T	2.20

**Sample stock is generally held on all standard versions.*

Chip Information

TRANSISTOR COUNT: 419

Package Information

For the latest package outline information and land patterns (footprints), go to **www.maximintegrated.com/packages**. Note that a "+", "#", or "-" in the package code indicates RoHS status only. Package drawings may show a different suffix character, but the drawing pertains to the package regardless of RoHS status.

PACKAGE TYPE	PACKAGE CODE	OUTLINE NO.	LAND PATTERN NO.
3 SC70	X3-2	**21-0075**	**90-0208**
3 SOT23	U3-1	**21-0051**	**90-0179**

Revision History

REVISION NUMBER	REVISION DATE	DESCRIPTION	PAGES CHANGED
0	12/05	Initial release	—
1	4/14	No /V OPNs; removed Automotive reference from *Applications* section	1

For pricing, delivery, and ordering information, please contact Maxim Direct at 1-888-629-4642, or visit Maxim Integrated's website at www.maximintegrated.com.

Maxim Integrated cannot assume responsibility for use of any circuitry other than circuitry entirely embodied in a Maxim Integrated product. No circuit patent licenses are implied. Maxim Integrated reserves the right to change the circuitry and specifications without notice at any time. The parametric values (min and max limits) shown in the Electrical Characteristics table are guaranteed. Other parametric values quoted in this data sheet are provided for guidance.

Maxim Integrated and the Maxim Integrated logo are trademarks of Maxim Integrated Products, Inc. © 2014 Maxim Integrated Products, Inc.