19-2379; Rev 1; 12/05

MAXIM

Low-Voltage, High-Accuracy, Quad Voltage Monitors in µMAX Package

General Description

The MAX6709/MAX6714 quad voltage monitors provide accurate monitoring of up to four supplies without any external components. A variety of factory-trimmed threshold voltages and supply tolerances are available to optimize the MAX6709/MAX6714 for specific applications. The selection includes input options for monitoring 5.0V, 3.3V, 3.0V, 2.5V, and 1.8V voltages. Additional high-input-impedance comparator options can be used as adjustable voltage monitors, general-purpose comparators, or digital-level translators.

The MAX6709 provides four independent open-drain outputs with 10µA internal pullup to V_{CC}. The MAX6714 provides an active-low, open-drain $\overline{RESET}$ output with integrated reset timing and three power-fail comparator outputs.

Each of the monitored voltages is available with trip thresholds to support power-supply tolerances of either 5% or 10% below the nominal voltage. An internal bandgap reference ensures accurate trip thresholds across the operating temperature range.

The MAX6709 consumes only 35µA (typ) of supply current. The MAX6714 consumes only 60µA (typ) of supply current. The MAX6709/MAX6714 operate with supply voltages of 2.0V to 5.5V. An internal undervoltage lockout circuit forces all four digital outputs low when V_{CC} drops below the minimum operating voltage. The four digital outputs have weak internal pullups to V_{CC}, accommodating wire-ORed connections. Each input threshold voltage has an independent output. The MAX6709/MAX6714 are available in a 10-pin µMAX package and operate over the extended (-40°C to +85°C) temperature range.

Applications

Telecommunications

Servers

High-End Printers

Desktop and Notebook Computers

Data Storage Equipment

Networking Equipment

Multivoltage Systems

Typical Operating Circuits appear at end of data sheet.

Selector Guides appear at end of data sheet.

Features

- **Monitor Four Power-Supply Voltages**
- **Precision Factory-Set Threshold Options for 5.0V, 3.3V, 3.0V, 2.5V, and 1.8V (Nominal) Supplies**
- **Adjustable Voltage Threshold Monitors Down to 0.62V**
- **High-Accuracy (±2.0%) Adjustable Threshold Inputs**
- **Low Supply Current**
  MAX6709: 35µA
  MAX6714: 60µA
- **Four Independent, Active-Low, Open-Drain Outputs with 10µA Internal Pullup to V_{CC}**
- **140ms (min) Reset Timeout Period (MAX6714 only)**
- **2.0V to 5.5V Supply Voltage Range**
- **Immune to Supply Transients**
- **Fully Specified from -40°C to +85°C**
- **Small 10-Pin µMAX Package**

Ordering Information

PART	TEMP RANGE	PIN-PACKAGE
MAX6709_UB*	-40°C to +85°C	10 µMAX
MAX6714_UB*	-40°C to +85°C	10 µMAX

**Insert the desired letter from the Selector Guide into the blank to complete the part number.*
Devices are available in both leaded and lead-free packaging. Specify lead free by adding the + symbol at the end of the part number when ordering.

Pin Configurations

TOP VIEW

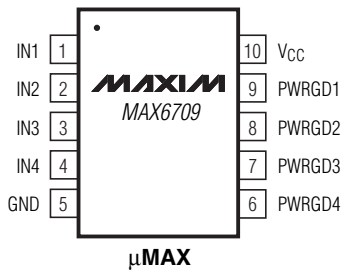

µMAX

Pin Configurations continued at end of data sheet.

For pricing, delivery, and ordering information, please contact Maxim/Dallas Direct! at 1-888-629-4642, or visit Maxim's website at www.maxim-ic.com.

Low-Voltage, High-Accuracy, Quad Voltage Monitors in µMAX Package

ABSOLUTE MAXIMUM RATINGS

All Pins to GND .....-0.3V to +6V
Input/Output Current (all pins) 20mA
Continuous Power Dissipation (T_A = +70°C)
10-Pin µMAX (derate 5.6mW/°C above +70°C) 444mW
Operating Temperature Range .....-40°C to +85°C
Storage Temperature Range .....-65°C to +150°C
Junction Temperature .....+150°C
Lead Temperature (soldering, 10s) .....+300°C

Stresses beyond those listed under "Absolute Maximum Ratings" may cause permanent damage to the device. These are stress ratings only, and functional operation of the device at these or any other conditions beyond those indicated in the operational sections of the specifications is not implied. Exposure to absolute maximum rating conditions for extended periods may affect device reliability.

ELECTRICAL CHARACTERISTICS (MAX6709)

(V_{CC} = 2.0V to 5.5V, T_A = -40°C to +85°C, unless otherwise noted. Typical values are at V_{CC} = 5V and T_A = +25°C.) (Note 1)

PARAMETER	SYMBOL	CONDITIONS		MIN	TYP	MAX	UNITS
Supply Voltage Range	V_{CC}			2.0		5.5	V
Supply Current	I_{CC}	V_{CC} = 3V			25	50	µA
		V_{CC} = 5V			35	65	
Input Current	$I_{IN_}$	$V_{IN_}$ = input threshold voltage			25	40	µA
		$V_{IN_}$ = 0 to 0.85V (for adjustable threshold)				0.2	
Threshold Voltage	V_{TH}	IN_ decreasing	5.0V (-5%)	4.50	4.63	4.75	V
			5.0V (-10%)	4.25	4.38	4.50	
			3.3V (-5%)	3.00	3.08	3.15	
			3.3V (-10%)	2.85	2.93	3.00	
			3.0V (-5%)	2.70	2.78	2.85	
			3.0V (-10%)	2.55	2.63	2.70	
			2.5V (-5%)	2.25	2.32	2.38	
			2.5V (-10%)	2.13	2.19	2.25	
			1.8V (-5%)	1.62	1.67	1.71	
			1.8V (-10%)	1.53	1.58	1.62	
Adjustable Threshold	V_{TH}	IN_ decreasing		0.609	0.623	0.635	V
Threshold Voltage Temperature Coefficient	TCV_{TH}				60		ppm/°C
Threshold Hysteresis	V_{HYST}				0.3 x V_{TH}		%
Propagation Delay	t_{PD}	$V_{IN_}$ falling at 10mV/µs from V_{TH} to (V_{TH} - 50mV)			30		µs
		$V_{IN_}$ rising at 10mV/µs from V_{TH} to (V_{TH} + 50mV)			5		
Output Low Voltage	V_{OL}	V_{CC} = 5V, I_{SINK} = 2mA				0.3	V
		V_{CC} = 2.5V, I_{SINK} = 1.2mA				0.3	
		V_{CC} = 1V, I_{SINK} = 50µA (Note 2)				0.3	
Output High Voltage	V_{OH}	V_{CC} ≥ 2.0V, I_{SOURCE} = 6µA (min), PWRGD_ unasserted		0.8 x V_{CC}			V
Output High Source Current	I_{OH}	V_{CC} ≥ 2.0V, PWRGD_ unasserted			10		µA

ELECTRICAL CHARACTERISTICS (MAX6714)

(V_{CC} = 2.0V to 5.5V, T_A = -40°C to +85°C, unless otherwise noted. Typical values are at V_{CC} = 5V and T_A = +25°C.) (Note 1)

PARAMETER	SYMBOL	CONDITIONS		MIN	TYP	MAX	UNITS
Supply Voltage Range	V_{CC}			2.0		5.5	V
Supply Current (Note 3)	I_{CC}	V_{CC} = 3V			60	90	µA
		V_{CC} = 5V			80	105	
Power-Fail Input Current	$I_{PFI_}$	$V_{PFI_}$ = 0 to 0.85V				0.2	µA
V_{CC} Reset Threshold	V_{TH}	V_{CC} decreasing	MAX6714B (-5%)	4.50	4.63	4.75	V
			MAX6714A (-10%)	4.25	4.38	4.50	
			MAX6714D (-5%)	3.00	3.08	3.15	
			MAX6714C (-10%)	2.85	2.93	3.00	
Power-Fail Input Threshold	V_{PFI}	$V_{PFI_}$ decreasing		0.609	0.623	0.635	V
Threshold Hysteresis	V_{HYST}	VPFI_ increasing relative to $V_{PFI_}$ decreasing			0.3 x V_{TH}		%
Reset Timeout Period	t_{RP}			140	210	280	ms
Reset Delay	t_{RD}	V_{CC} falling at 10mV/µs from (V_{TH} + 100mV) to (V_{TH} - 100mV)			30		µs
Power-Fail Propagation Delay	t_{PFD}	$V_{PFI_}$ falling at 10mV/µs from V_{TH} to (V_{TH} - 50mV)			30		µs
		V_{CC} falling at 10mV/µs from (V_{TH} + 100mV) to (V_{TH} - 100mV)			5		
$\overline{MR}$ Input Voltage	V_{IL}					0.3 x V_{CC}	V
	V_{IH}			0.7 x V_{CC}			
$\overline{MR}$ Minimum Input Pulse				1			µs
$\overline{MR}$ Glitch Rejection					100		ns
$\overline{MR}$ to $\overline{RESET}$ Delay	t_{MRD}				200		ns
$\overline{MR}$ Pullup Resistance		$\overline{MR}$ to V_{CC}		10	20	50	kΩ
Output Low Voltage	V_{OL}	V_{CC} = 5V, I_{SINK} = 2mA				0.3	V
		V_{CC} = 2.5V, I_{SINK} = 1.2mA				0.3	
		V_{CC} = 1V, I_{SINK} = 50µA (Note 2)				0.3	
Output High Voltage	V_{OH}	V_{CC} ≥ 2.0V, I_{SOURCE} = 6mA (min), $\overline{RESET}$, $\overline{PFO_}$ unasserted		0.8 x V_{CC}			V
Output High Source Current	I_{OH}	V_{CC} ≥ 2.0V, $\overline{RESET}$ and $\overline{PFO_}$ unasserted			10		µA

Note 1: 100% production tested at T_A = +25°C. Overtemperature limits guaranteed by design.

Note 2: Condition at V_{CC} = 1V is guaranteed only from T_A = 0°C to +70°C.

Note 3: Monitored voltage 5V/3.3V is also the device supply. In the typical condition, supply current splits as follows: 25µA for the resistor-divider, and the rest for other circuitry.

Low-Voltage, High-Accuracy, Quad Voltage Monitors in µMAX Package

Typical Operating Characteristics

(V_{CC} = 5V, T_A = +25°C, unless otherwise noted.)

SUPPLY CURRENT vs. SUPPLY VOLTAGE (MAX6709)

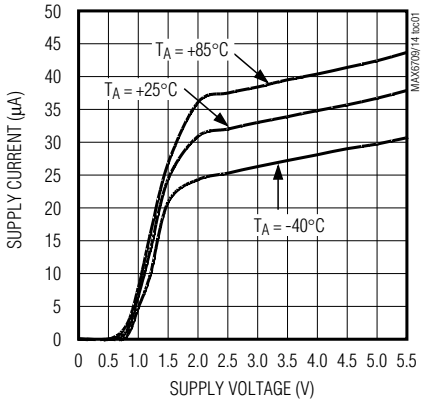

SUPPLY CURRENT vs. SUPPLY VOLTAGE (MAX6714)

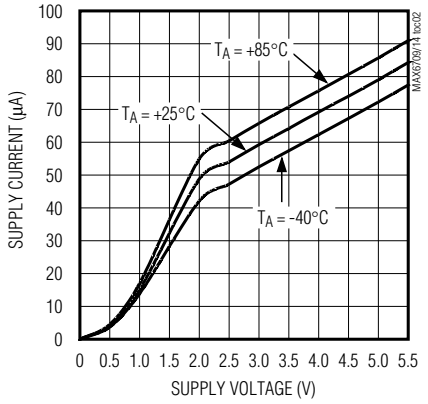

NORMALIZED THRESHOLD ERROR vs. SUPPLY VOLTAGE (MAX6709)

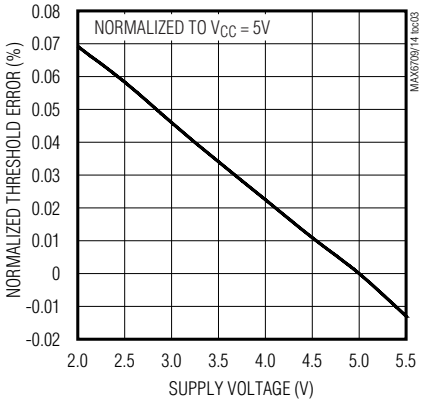

NORMALIZED THRESHOLD vs. TEMPERATURE (MAX6709)

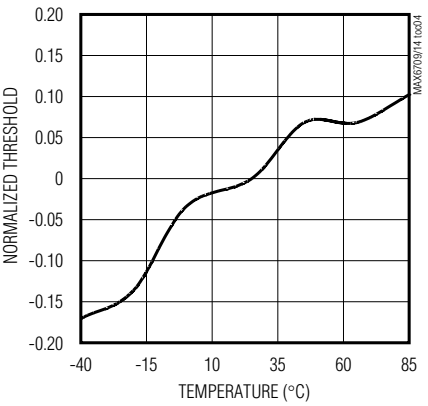

NORMALIZED PFI_ THRESHOLD vs. TEMPERATURE (MAX6714)

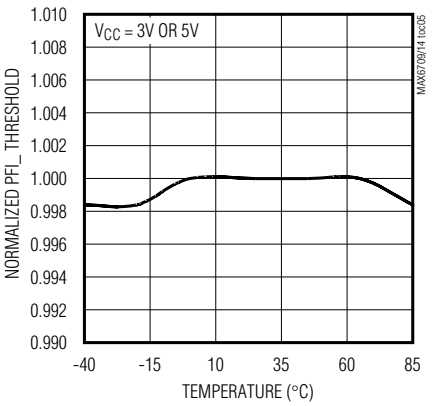

OUTPUT VOLTAGE LOW vs. SINK CURRENT

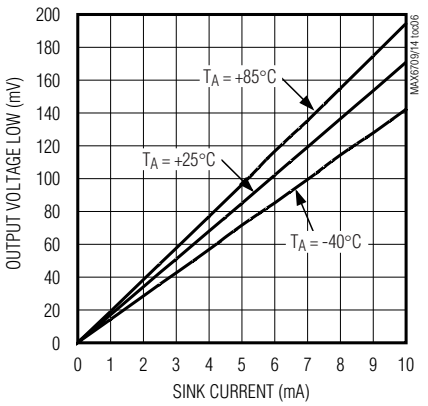

MAXIMUM TRANSIENT DURATION vs. V_{CC} OVERDRIVE (MAX6714)

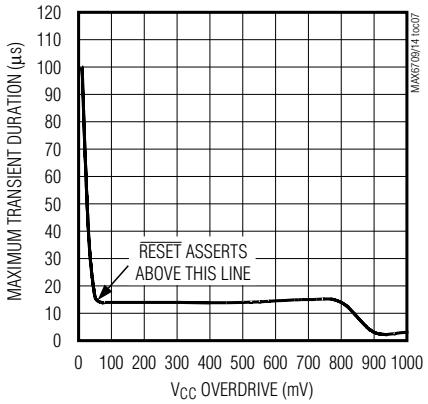

MAXIMUM TRANSIENT DURATION vs. PFI_ OVERDRIVE (MAX6714)

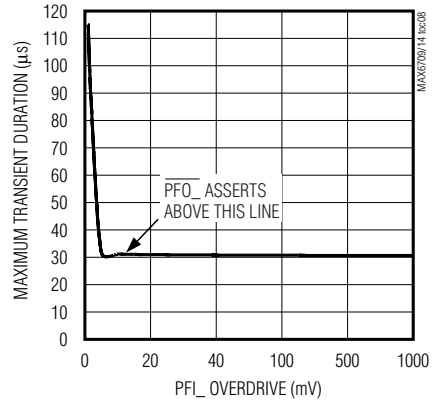

RESET TIMEOUT PERIOD vs. TEMPERATURE (MAX6714)

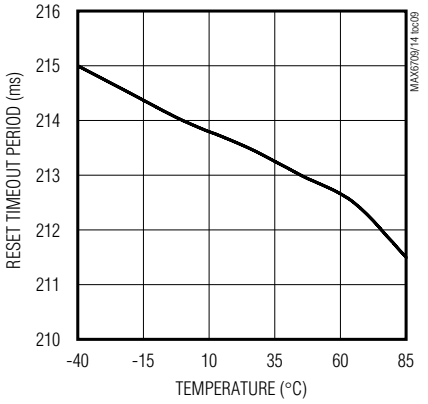

Typical Operating Characteristics (continued)

(V_{CC} = 5V, T_A = +25°C, unless otherwise noted.)

PROPAGATION DELAY (WITH 100mV OVERDRIVE)

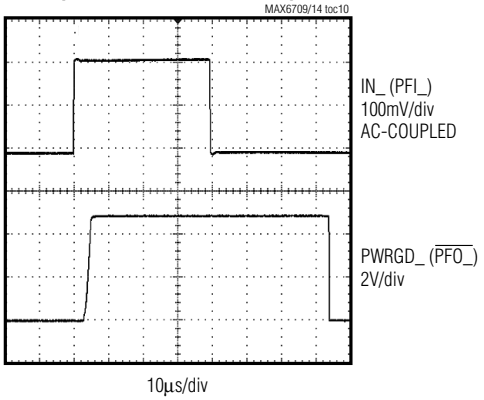

PFO_ PULLUP AND PULLDOWN RESPONSE ($C_{PFO_}$ = 47pF)

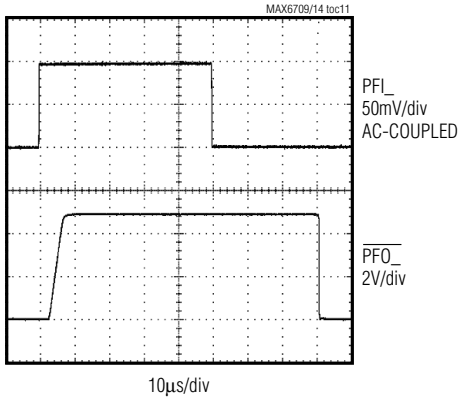

RESET TIMEOUT DELAY

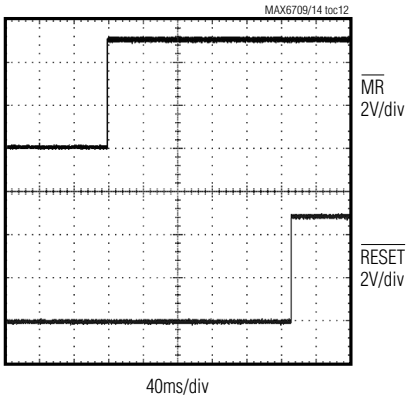

Low-Voltage, High-Accuracy, Quad Voltage Monitors in µMAX Package

Pin Description

PIN		NAME	FUNCTION
MAX6709	MAX6714		
1	—	IN1	Input Voltage 1. See *Selector Guide* for monitored voltages.
2	—	IN2	Input Voltage 2. See *Selector Guide* for monitored voltages.
3	—	IN3	Input Voltage 3. See *Selector Guide* for monitored voltages.
4	—	IN4	Input Voltage 4. See *Selector Guide* for monitored voltages.
5	5	GND	Ground
6	—	PWRGD4	Output 4. PWRGD4 asserts low when IN4 falls below its threshold voltage. PWRGD4 is open drain with a 10µA internal pullup current source to V_{CC}.
7	—	PWRGD3	Output 3. PWRGD3 asserts low when IN3 falls below its threshold voltage. PWRGD3 is open drain with a 10µA internal pullup current source to V_{CC}.
8	—	PWRGD2	Output 2. PWRGD2 asserts low when IN2 falls below its threshold voltage. PWRGD2 is open drain with a 10µA internal pullup current source to V_{CC}.
9	—	PWRGD1	Output 1. PWRGD1 asserts low when IN1 falls below its threshold voltage. PWRGD1 is open drain with a 10µA internal pullup current source to V_{CC}.
10	10	V_{CC}	Power-Supply Input. Connect V_{CC} to a 2.0V to 5.5V supply. An undervoltage lockout circuit forces all PWRGD_ outputs low when V_{CC} drops below the minimum operating voltage. V_{CC} is not a monitored voltage for the MAX6709. For the MAX6714, $\overline{RESET}$ asserts low when V_{CC} drops below its threshold.
—	1	$\overline{MR}$	Manual Reset Input. Force $\overline{MR}$ low to assert the $\overline{RESET}$ output. $\overline{RESET}$ remains asserted for the reset timeout period after $\overline{MR}$ goes high. $\overline{MR}$ is internally pulled up to V_{CC}.
—	2	PFI1	Power-Fail Input 1. Input to noninverting input of the power-fail comparator. PFI1 is compared to an internal 0.62V reference. Use an external resistor-divider network to adjust the monitor threshold.
—	3	PFI2	Power-Fail Input 2. Input to noninverting input of the power-fail comparator. PFI2 is compared to an internal 0.62V reference. Use an external resistor-divider network to adjust the monitor threshold.
—	4	PFI3	Power-Fail Input 3. Input to noninverting input of the power-fail comparator. PFI3 is compared to an internal 0.62V reference. Use an external resistor-divider network to adjust the monitor threshold.
—	6	$\overline{PFO3}$	Power-Fail Output 3. $\overline{PFO3}$ is an active-low, open-drain output with a 10µA internal pullup to V_{CC}. $\overline{PFO3}$ asserts low when PFI3 is below the selected threshold.
—	7	$\overline{PFO2}$	Power-Fail Output 2. $\overline{PFO2}$ is an active-low, open-drain output with a 10µA internal pullup to V_{CC}. $\overline{PFO2}$ asserts low when PFI2 is below the selected threshold.
—	8	$\overline{PFO1}$	Power-Fail Output 1. $\overline{PFO1}$ is an active-low, open-drain output with a 10µA internal pullup to V_{CC}. $\overline{PFO1}$ asserts low when PFI1 is below the selected threshold.
—	9	$\overline{RESET}$	Reset Output. $\overline{RESET}$ is an active-low, open-drain output that asserts low when V_{CC} drops below its preset threshold voltage or when a manual reset is initiated. $\overline{RESET}$ remains low for the reset timeout period after V_{CC} exceeds the selected reset threshold or $\overline{MR}$ is released.

Detailed Description

The MAX6709/MAX6714 are low-power, quad voltage monitors designed for multivoltage systems. Preset voltage options for 5.0V, 3.3V, 3.0V, 2.5V, and 1.8V make these quad monitors ideal for applications such as telecommunications, desktop and notebook computers, high-end printers, data storage equipment, and networking equipment.

The MAX6709/MAX6714 have an internally trimmed threshold that minimizes or eliminates the need for external components. The four open-drain outputs have weak (10µA) internal pullups to V_{CC}, allowing them to interface easily with other logic devices. The weak internal pullups can be overdriven by external pullups to any voltage from 0 to 5.5V. Internal circuitry prevents current flow from the external pullup voltage to V_{CC}. The outputs can be wire-ORed for a single power-good signal.

The MAX6709 quad voltage monitor includes an accurate reference, four precision comparators, and a series of internally trimmed resistor-divider networks to set the factory-fixed threshold options. The resistor networks scale the specified IN_ reset voltages to match the internal reference/comparator voltage. Adjustable threshold options bypass the internal resistor networks and connect directly to one of the comparator inputs (an external resistor-divider network is required for threshold matching). The MAX6709 monitors power supplies with either 5% or 10% tolerance specifications, depending on the selected version. Additional high-input-impedance comparator options can be used

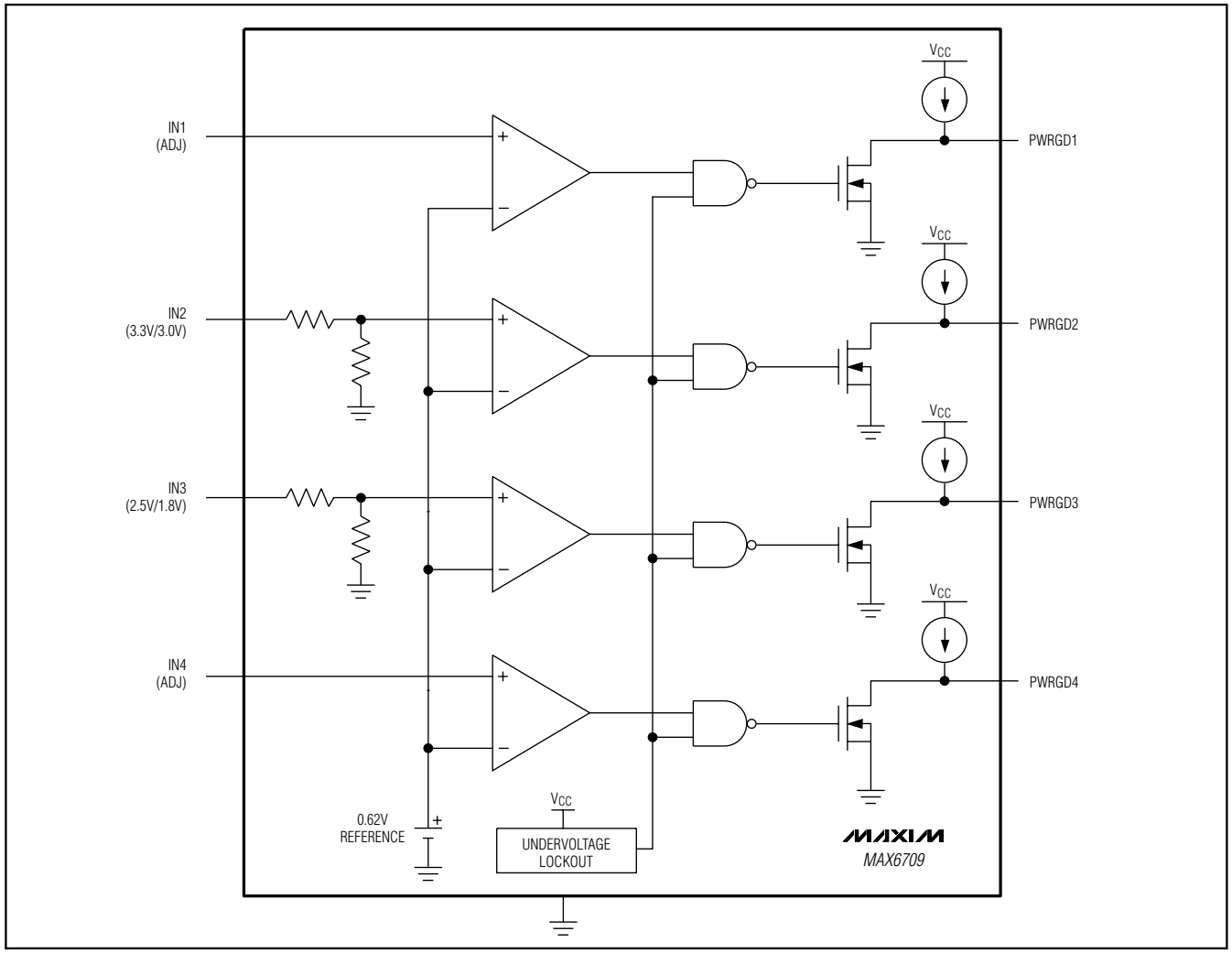

Figure 1. MAX6709 Functional Diagram

Low-Voltage, High-Accuracy, Quad Voltage Monitors in µMAX Package

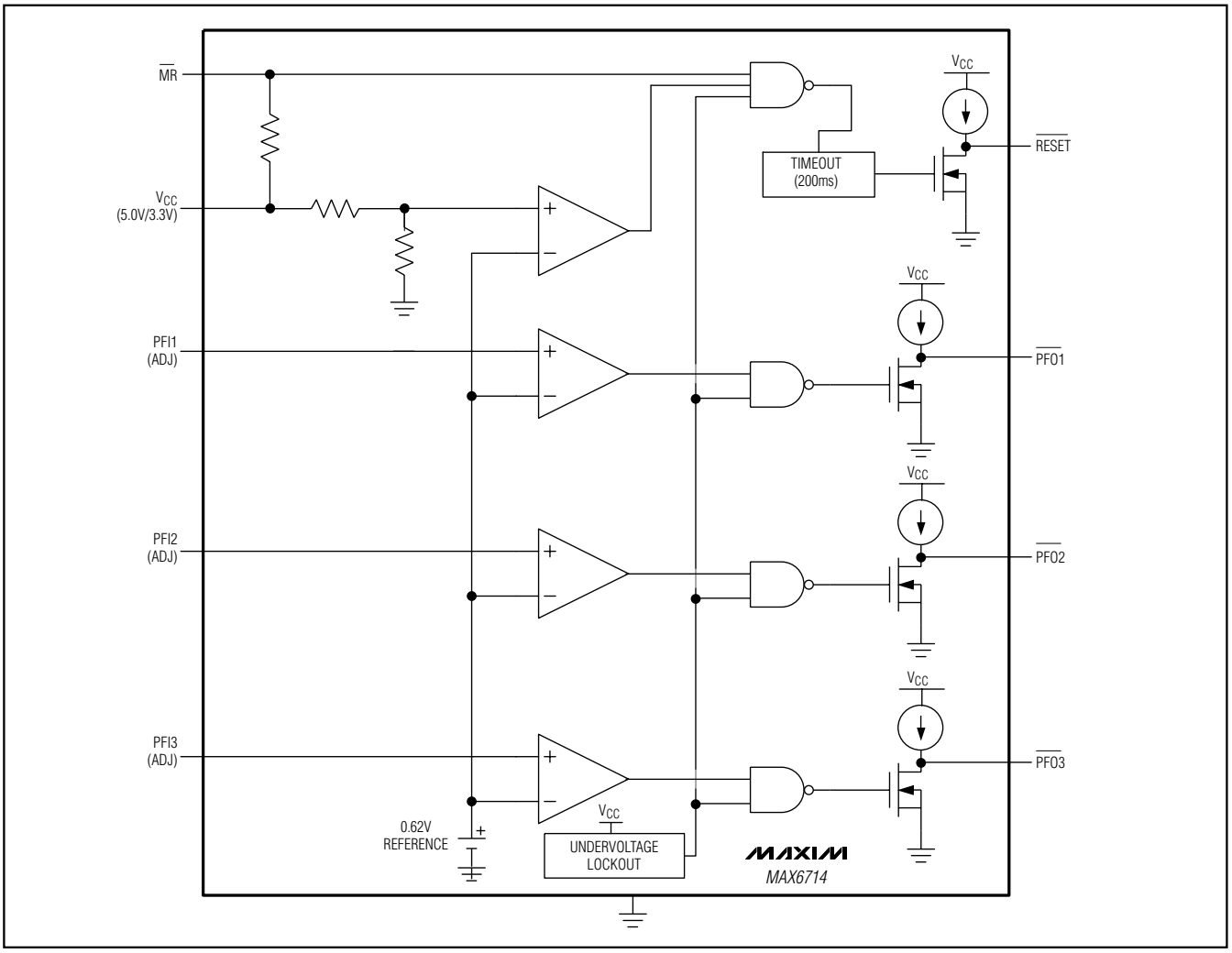

Figure 2. MAX6714 Functional Diagram

as an adjustable voltage monitor, general-purpose comparator, or digital-level translator.

The MAX6714 quad voltage monitor/reset offers one fixed input with internal timing for µP reset, three power-fail comparators, and a manual reset input ($\overline{MR}$). $\overline{RESET}$ asserts low when V_{CC} drops below its threshold or $\overline{MR}$ is driven low. Each of the three power-fail inputs connects directly to one of the comparator inputs.

When any input is higher than the threshold level, the output is high. The output goes low as the input drops below the threshold voltage. The undervoltage lockout circuitry remains active and all outputs remain low with V_{CC} down to 1V (Figures 1 and 2).

Applications Information

Hysteresis

When the voltage on one comparator input is at or near the voltage on another input, ambient noise generally causes the comparator output to oscillate. The most common way to eliminate this problem is through hysteresis. When the two comparator input voltages are equal, hysteresis causes one comparator input voltage to move quickly past the other, thus taking the input out of the region where oscillation occurs. Standard comparators require hysteresis to be added through the use of external resistors. The external resistive network usually provides a positive feedback to the input in order to cause a jump in the threshold voltage when output toggles in one direction or the other. These

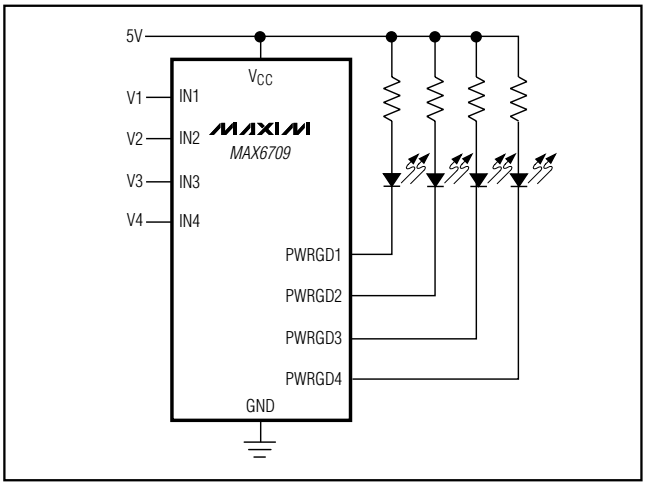

Figure 3. Quad Undervoltage Detector with LED Indicators

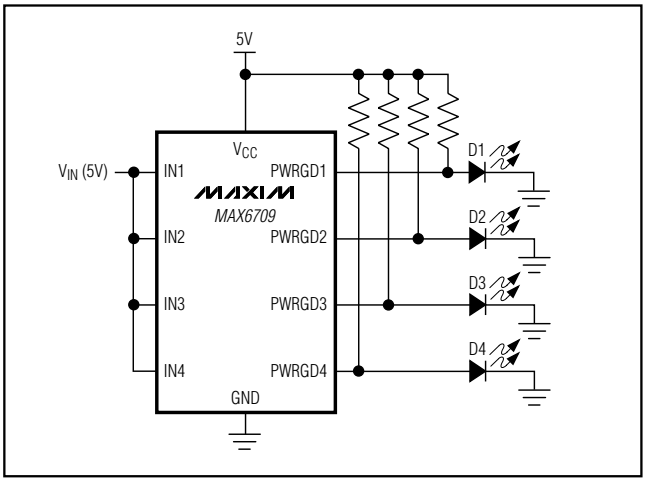

Figure 4. V_{CC} Bar Graph Monitoring

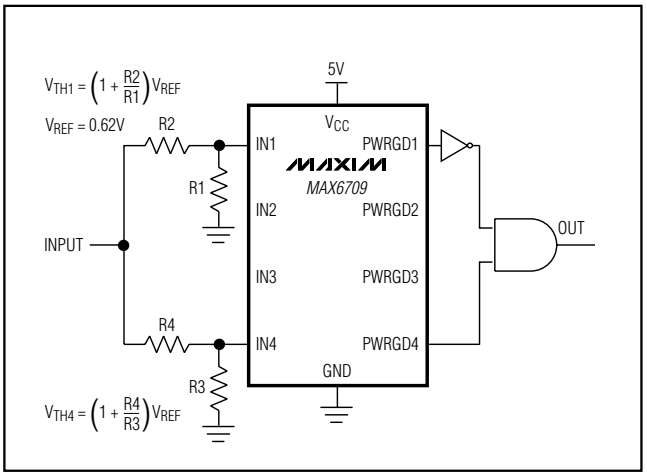

Figure 5. Window Detection

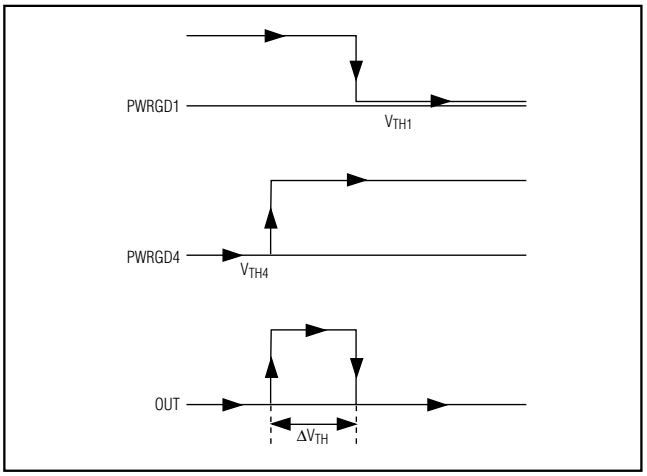

Figure 6. Output Response of Window Detector Circuit

resistors are not required when using the MAX6709/MAX6714 because hysteresis is built into the device. MAX6709/MAX6714 hysteresis is typically 0.3% of the threshold voltage.

Undervoltage Detection Circuit

The open-drain outputs of the MAX6709/MAX6714 can be configured to detect an undervoltage condition. Figure 3 shows a configuration where an LED turns on when the comparator output is low, indicating an undervoltage condition.

The MAX6709/MAX6714 can also be used in applications such as system supervisory monitoring, multivoltage level detection, and V_{CC} bar graph monitoring (Figure 4).

Window Detection

A window detector circuit uses two auxiliary inputs in a configuration such as the one shown in Figure 5. External resistors R1–R4 set the two threshold voltages (V_{TH1} and V_{TH4}) of the window detector circuit. Window width (ΔV_{TH}) is the difference between the threshold voltages (Figure 6).

Adjustable Input

The MAX6709 offers several monitor options with adjustable reset thresholds. The MAX6714 has three monitored inputs with adjustable thresholds. The threshold voltage at each adjustable IN_ (PFI_) input is typically 0.62V. To monitor a voltage >0.62V, connect a resistor-divider network to the circuit as shown in Figure 7.

$$V_{INTH} = 0.62V \times (R1 + R2) / R2$$

Low-Voltage, High-Accuracy, Quad Voltage Monitors in µMAX Package

Or, solved in terms of R1:

$$R1 = R2 ((V_{INTH} / 0.62V) - 1)$$

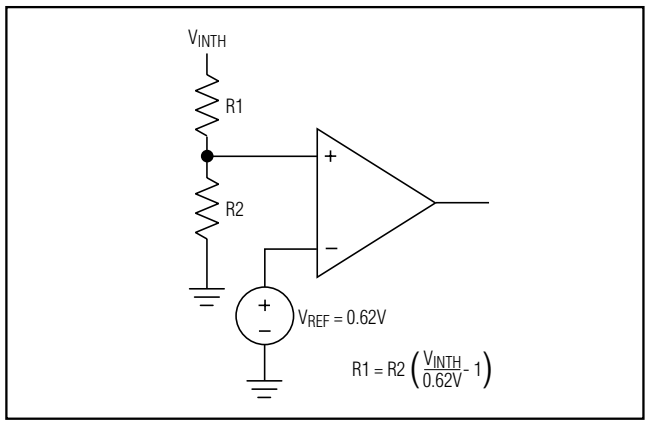

Figure 7. Setting the Auxiliary Monitor

Unused Inputs

The unused inputs (except the adjustable) are internally connected to ground through the lower resistors of the threshold-setting resistor pairs. The adjustable input, however, must be connected to ground if unused.

Reset Output

The MAX6714 $\overline{RESET}$ output asserts low when V_{CC} drops below its specified threshold or $\overline{MR}$ asserts low and remains low for the reset timeout period (140ms min) after V_{CC} exceeds its threshold and $\overline{MR}$ deasserts (Figure 8). The output is open drain with a weak (10µA) internal pullup to V_{CC}. For many applications, no external pullup resistor is required to interface with other logic devices. An external pullup resistor to any voltage from 0 to 5.5V overdrives the internal pullup if interfacing to different logic supply voltages (Figure 9). Internal circuitry prevents reverse current flow from the external pullup voltage to V_{CC}.

Manual Reset Input

Many µP-based products require manual reset capability, allowing the operator, a test technician, or external logic circuitry to initiate a reset. A logic low on $\overline{MR}$ asserts $\overline{RESET}$ low. $\overline{RESET}$ remains asserted while $\overline{MR}$ is low, and during the reset timeout period (140ms min) after $\overline{MR}$ returns high. The $\overline{MR}$ input has an internal 20kΩ pullup resistor to V_{CC}, so it can be left open if unused. Drive $\overline{MR}$ with TTL or CMOS-logic levels, or with open-drain/collector outputs. Connect a normally open momentary switch from $\overline{MR}$ to GND to create a manual reset function; external debounce circuitry is not required. If $\overline{MR}$ is driven from long cables or if the device is used in a noisy environment, connecting a 0.1µF capacitor from $\overline{MR}$ to GND provides additional noise immunity.

Reseting the µP from a 2nd Voltage (MAX6714)

The MAX6714 can be configured to assert a reset from a second voltage by connecting the power-fail output to manual reset. As the $V_{PFI_}$ falls below its threshold, $\overline{PFO}$ goes low and asserts the reset output for the reset timeout period after the manual reset input is deasserted. (See *Typical Operating Circuit*.)

Power-Supply Bypassing and Grounding

The MAX6709/MAX6714 operate from a single 2.0V to 5.5V supply. In noisy applications, bypass V_{CC} with a 0.1µF capacitor as close to V_{CC} as possible.

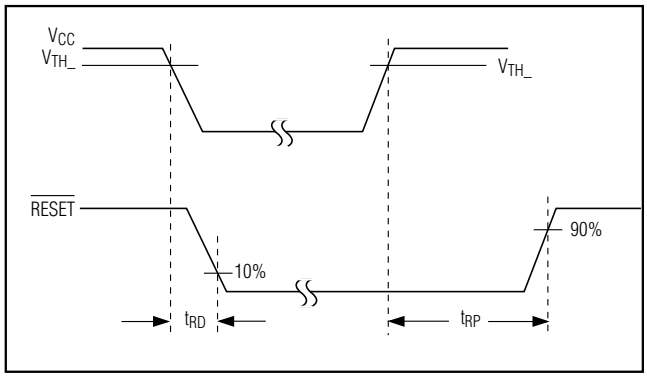

Figure 8. $\overline{RESET}$ Output Timing Diagram

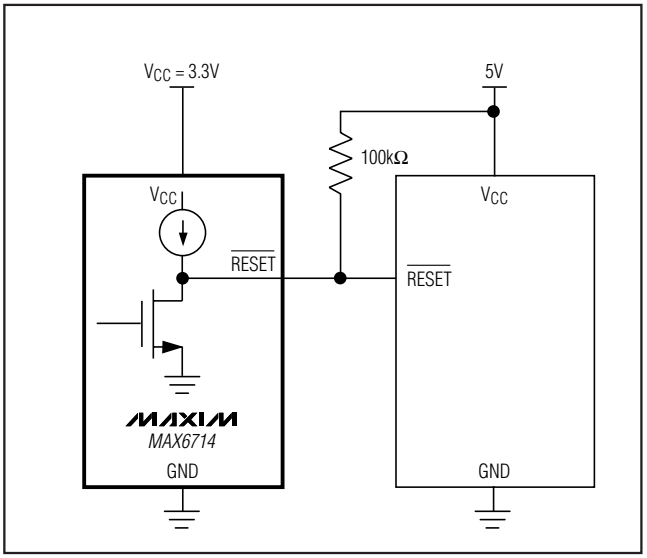

Figure 9. Interfacing to Different Logic Supply Voltage

Selector Guide (MAX6709)

PART	NOMINAL INPUT VOLTAGE				
	IN1 (V)	IN2 (V)	IN3 (V)	IN4 (V)	SUPPLY TOLERANCE (%)
MAX6709AUB	5	3.3	2.5	Adj*	10
MAX6709BUB	5	3.3	2.5	Adj*	5
MAX6709CUB	5	3.3	1.8	Adj*	10
MAX6709DUB	5	3.3	1.8	Adj*	5
MAX6709EUB	Adj*	3.3	2.5	1.8	10
MAX6709FUB	Adj*	3.3	2.5	1.8	5
MAX6709GUB	5	3.3	Adj*	Adj*	10
MAX6709HUB	5	3.3	Adj*	Adj*	5
MAX6709IUB	Adj*	3.3	2.5	Adj*	10
MAX6709JUB	Adj*	3.3	2.5	Adj*	5
MAX6709KUB	Adj*	3.3	1.8	Adj*	10
MAX6709LUB	Adj*	3.3	1.8	Adj*	5
MAX6709MUB	Adj*	3	Adj*	Adj*	10
MAX6709NUB	Adj*	3	Adj*	Adj*	5
MAX6709OUB	Adj*	Adj*	Adj*	Adj*	N/A

**Adjustable voltage based on 0.62V internal threshold. External threshold voltage can be set using an external resistor-divider.*

Selector Guide (MAX6714)

PART	NOMINAL INPUT VOLTAGE				
	V_{CC} (V)	PFI1 (V)	PFI2 (V)	PFI3 (V)	SUPPLY TOLERANCE (%)
MAX6714AUB	5	Adj*	Adj*	Adj*	10
MAX6714BUB	5	Adj*	Adj*	Adj*	5
MAX6714CUB	3.3	Adj*	Adj*	Adj*	10
MAX6714DUB	3.3	Adj*	Adj*	Adj*	5

**Adjustable voltage based on 0.62V internal threshold. External threshold voltage can be set using an external resistor-divider.*

Pin Configurations (continued)

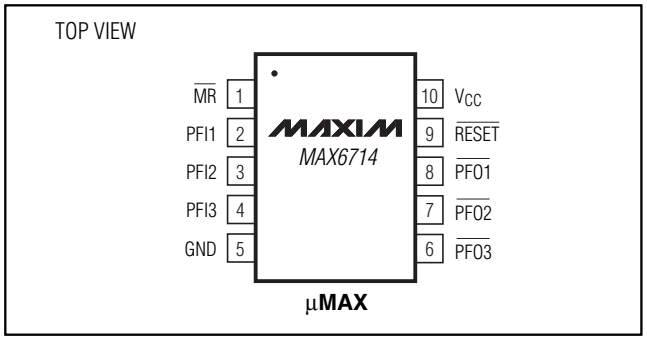

Chip Information

TRANSISTOR COUNT: 1029

PROCESS: BiCMOS

Low-Voltage, High-Accuracy, Quad Voltage Monitors in µMAX Package

Typical Operating Circuit (MAX6709)

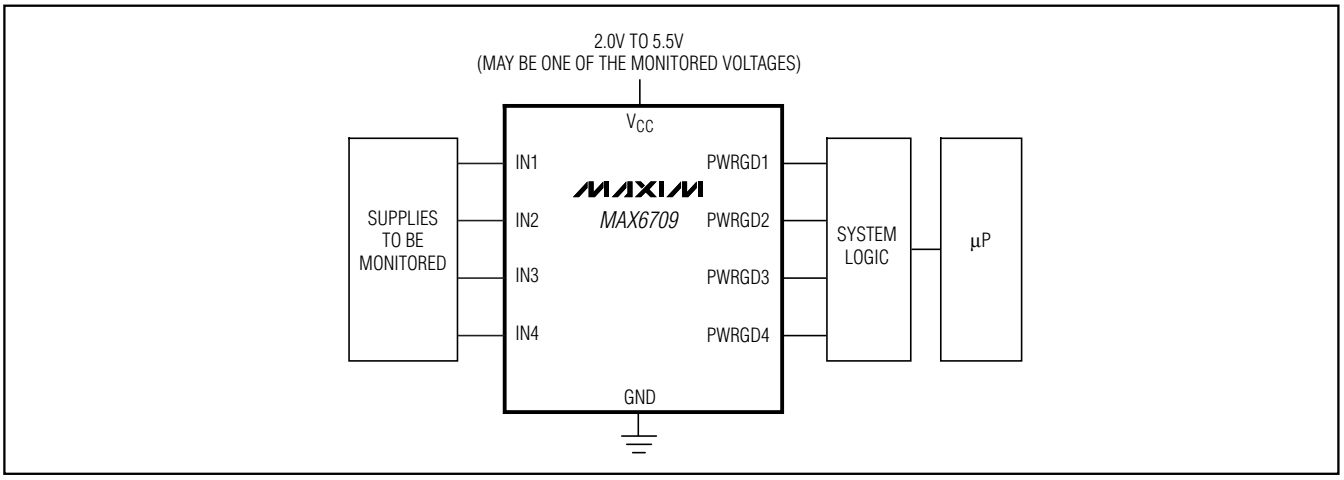

Typical Operating Circuit (MAX6714)

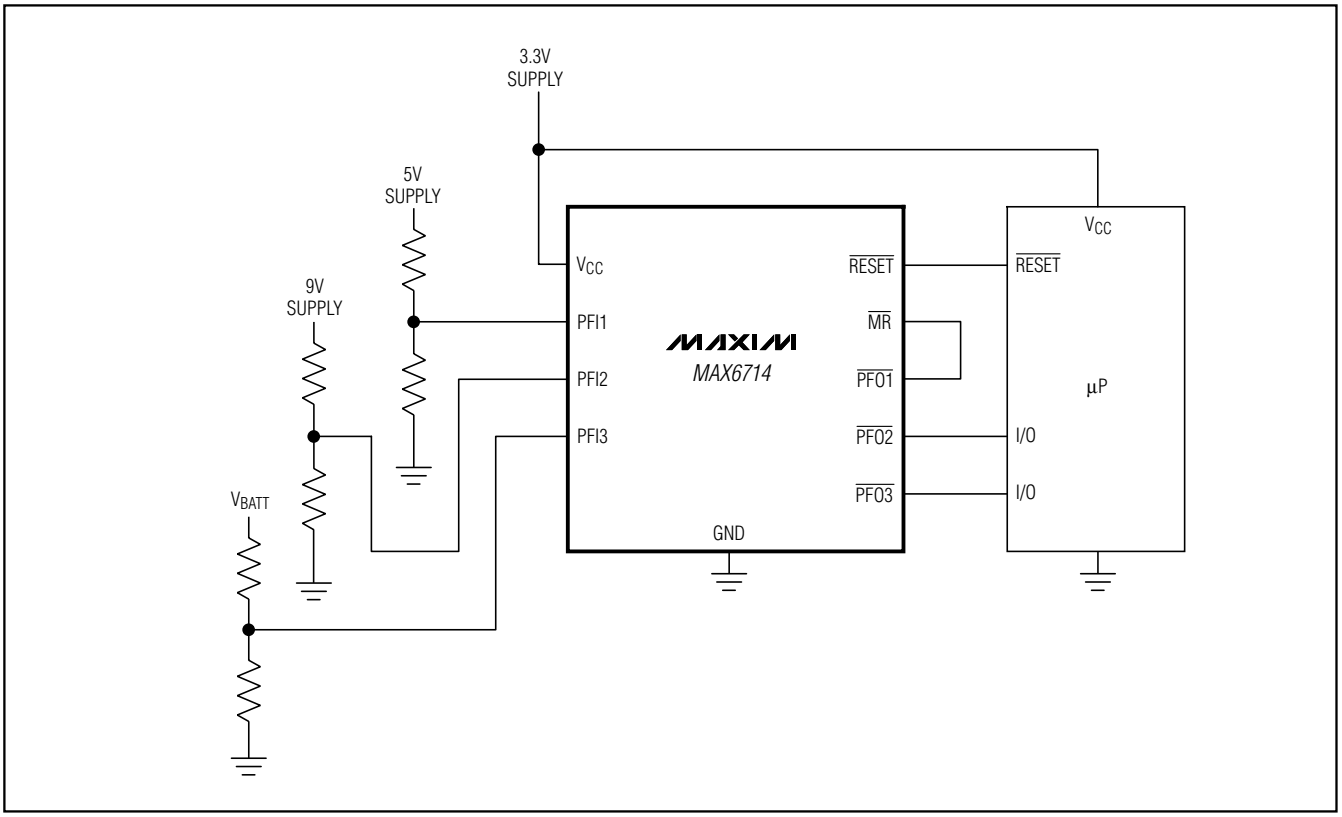

Package Information

(The package drawing(s) in this data sheet may not reflect the most current specifications. For the latest package outline information, go to **www.maxim-ic.com/packages**.)

10LUMAX.EPS

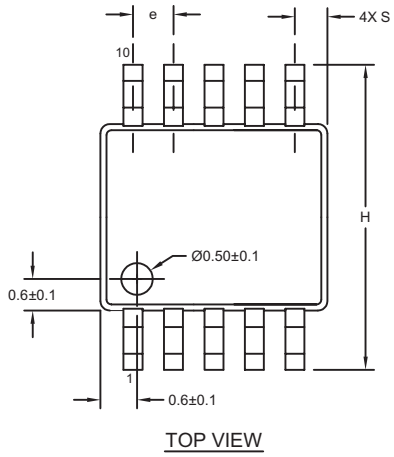

TOP VIEW

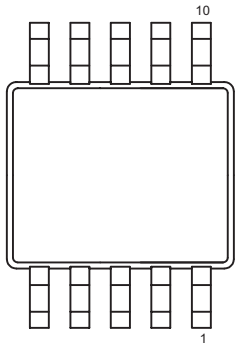

BOTTOM VIEW

	INCHES		MILLIMETERS	
DIM	MIN	MAX	MIN	MAX
A	-	0.043	-	1.10
A1	0.002	0.006	0.05	0.15
A2	0.030	0.037	0.75	0.95
D1	0.116	0.120	2.95	3.05
D2	0.114	0.118	2.89	3.00
E1	0.116	0.120	2.95	3.05
E2	0.114	0.118	2.89	3.00
H	0.187	0.199	4.75	5.05
L	0.0157	0.0275	0.40	0.70
L1	0.037 REF		0.940 REF	
b	0.007	0.0106	0.177	0.270
e	0.0197 BSC		0.500 BSC	
c	0.0035	0.0078	0.090	0.200
S	0.0196 REF		0.498 REF	
α	0°	6°	0°	6°

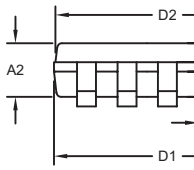

FRONT VIEW

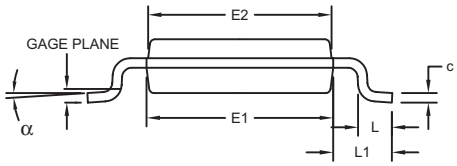

SIDE VIEW

NOTES:
1. D&E DO NOT INCLUDE MOLD FLASH.
2. MOLD FLASH OR PROTRUSIONS NOT TO EXCEED 0.15mm (.006").
3. CONTROLLING DIMENSION: MILLIMETERS.
4. MEETS JEDEC MO-187C-BA.

DALLAS SEMICONDUCTOR MAXIM

PROPRIETARY INFORMATION

TITLE: PACKAGE OUTLINE, 10L uMAX/uSOP

APPROVAL	DOCUMENT CONTROL NO.	REV.	
	21-0061	I	1/1

Maxim cannot assume responsibility for use of any circuitry other than circuitry entirely embodied in a Maxim product. No circuit patent licenses are implied. Maxim reserves the right to change the circuitry and specifications without notice at any time.

© 2005 Maxim Integrated Products Printed USA MAXIM is a registered trademark of Maxim Integrated Products, Inc.