19-0487; Rev 5; 12/05

MAXIM

5-Pin Microprocessor Supervisory Circuits With Watchdog Timer and Manual Reset

General Description

The MAX823/MAX824/MAX825 microprocessor (µP) supervisory circuits combine reset output, watchdog, and manual reset input functions in 5-pin SOT23 and SC70 packages. They significantly improve system reliability and accuracy compared to separate ICs or discrete components. The MAX823/MAX824/MAX825 are specifically designed to ignore fast transients on V_{CC}.

Seven preprogrammed reset threshold voltages are available (see *Reset Threshold Table*). All three devices have an active-low reset output, which is guaranteed to be in the correct state for V_{CC} down to 1V. The MAX823 also offers a watchdog input and manual reset input. The MAX824 offers a watchdog input and a complementary active-high reset. The MAX825 offers a manual reset input and a complementary active-high reset. The *Selector Guide* explains the functions offered in this series of parts.

Applications

Computers and Controllers
Embedded Controllers
Intelligent Instruments
Automotive Systems
Critical µP Monitoring
Portable/Battery-Powered Equipment

Reset Threshold Table

SUFFIX	RESET THRESHOLD (V)
L	4.63
M	4.38
T	3.08
S	2.93
R	2.63
Z (SC70 only)	2.32
Y (SC70 only)	2.19

Features

- **Precision Monitoring of +2.5V, +3V, +3.3V, and +5V Power Supplies**
- **Operating Current: 6µA (MAX823L/M) (SC70)**
  2µA (MAX825T/S/R/Z/Y) (SC70)
- **Fully Specified Over Temperature**
- **140ms min Power-On Reset**
- **Guaranteed $\overline{RESET}$ Valid to V_{CC} = 1V**
- **Power-Supply Transient Immunity**
- **Watchdog Timer with 1.6s Timeout (MAX823/MAX824)**
- **Manual Reset Input (MAX823/MAX825)**
- **No External Components**

Ordering Information

PART†	TEMP. RANGE	PIN-PACKAGE
MAX823_EXK-T	-40°C to +85°C	5 SC70-5
MAX823_EUK-T	-40°C to +125°C	5 SOT23-5
MAX824_EXK-T	-40°C to +85°C	5 SC70-5

†Insert the desired suffix letter (from the Reset Threshold table) into the blank to complete the part number. All devices are available in tape-and-reel only. There is a 2500 piece minimum order increment. Devices are available in both leaded and lead-free packaging. Specify lead-free by replacing "-T" with "+T" when ordering.

Ordering Information continued at end of data sheet.

Selector Guide

FUNCTION	MAX823	MAX824	MAX825
Active-Low Reset	✔	✔	✔
Active-High Reset	—	✔	✔
Watchdog Input	✔	✔	—
Manual Reset Input	✔	—	✔

Typical Operating Circuit appears at end of data sheet.
Marking Information appears at end of data sheet.

Pin Configurations

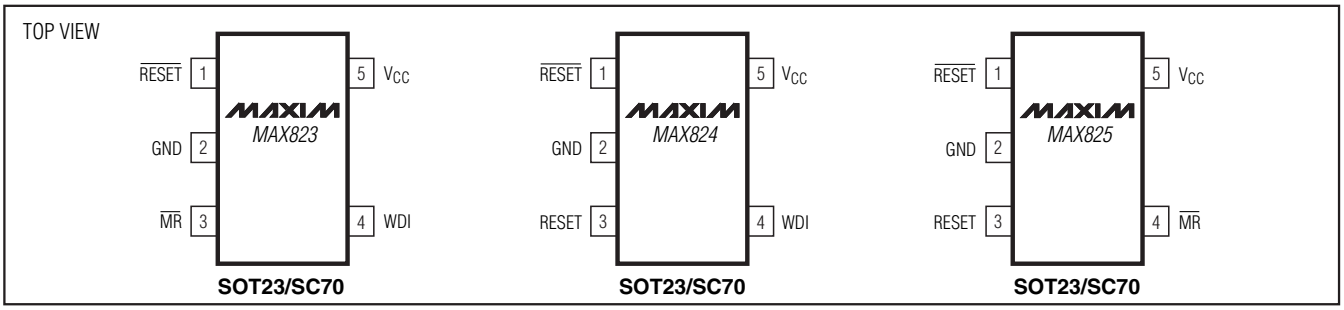

For pricing, delivery, and ordering information, please contact Maxim/Dallas Direct! at 1-888-629-4642, or visit Maxim's website at www.maxim-ic.com.

5-Pin Microprocessor Supervisory Circuits With Watchdog Timer and Manual Reset

ABSOLUTE MAXIMUM RATINGS

V_{CC} .....-0.3V to +6.0V
All Other Pins.....-0.3V to (V_{CC} + 0.3V)
Input Current, All Pins Except RESET and $\overline{RESET}$.....20mA
Output Current, RESET, $\overline{RESET}$ 20mA
Continuous Power Dissipation (T_A = +70°C)
5-Pin SC70 (derate 3.1mW/°C above +70°C).....247mW
5-Pin SOT23 (derate 7.1mW/°C above +70°C).....571mW
Operating Temperature Range
MAX82_EXK.....-40°C to +85°C
MAX82_EUK .....-40°C to +125°C
Storage Temperature Range .....-65°C to +150°C
Lead Temperature (soldering, 10s) .....+300°C

Stresses beyond those listed under "Absolute Maximum Ratings" may cause permanent damage to the device. These are stress ratings only, and functional operation of the device at these or any other conditions beyond those indicated in the operational sections of the specifications is not implied. Exposure to absolute maximum rating conditions for extended periods may affect device reliability.

ELECTRICAL CHARACTERISTICS

(V_{CC} = +4.75V to +5.5V for MAX82_L, V_{CC} = +4.5V to +5.5V for MAX82_M, V_{CC} = +3.15V to +3.6V for MAX82_T, V_{CC} = +3V to +3.6V for MAX82_S, V_{CC} = +2.7V to +3.6V for MAX82_R, V_{CC} = +2.38V to +2.75V for MAX82_Z, V_{CC} = +2.25V to +2.75V for MAX82_Y, T_A = T_{MIN} to T_{MAX}, T_A = -40°C to +85°C (SC70), T_A = -40°C to +125°C (SOT23), unless otherwise noted. Typical values are at T_A = +25°C.) (Note 1)

PARAMETER	SYMBOL	CONDITIONS		MIN	TYP	MAX	UNITS
Operating Voltage Range	V_{CC}	T_A = 0°C to +70°C		1.0		5.5	V
		T_A = T_{MIN} to T_{MAX}		1.2			
Supply Current (SOT23 Only)	I_{SUPPLY}	WDI and $\overline{MR}$ unconnected	MAX823L/M MAX824L/M		10	24	µA
			MAX823T/S/R/Z/Y MAX824T/S/R/Z/Y		5	12	
		$\overline{MR}$ unconnected	MAX825L/M		4.5	12	
			MAX825T/S/R/Z/Y		3	8	
Supply Current (SC70 Only)	I_{SUPPLY}	WDI and $\overline{MR}$ unconnected	MAX823L/M MAX824L/M		6	17	µA
			MAX823T/S/R/Z/Y MAX824T/S/R/Z/Y		4	12	
		$\overline{MR}$ unconnected	MAX825L/M		3	8	
			MAX825T/S/R/Z/Y		2	6	
Reset Threshold	V_{RST}	MAX82_L	T_A = +25°C	4.56	4.63	4.70	V
			T_A = T_{MIN} to T_{MAX}	4.50		4.75	
		MAX82_M	T_A = +25°C	4.31	4.38	4.45	
			T_A = T_{MIN} to T_{MAX}	4.25		4.50	
		MAX82_T	T_A = +25°C	3.04	3.08	3.11	
			T_A = T_{MIN} to T_{MAX}	3.00		3.15	
		MAX82_S	T_A = +25°C	2.89	2.93	2.96	
			T_A = T_{MIN} to T_{MAX}	2.85		3.00	
		MAX82_R	T_A = +25°C	2.59	2.63	2.66	
			T_A = T_{MIN} to T_{MAX}	2.55		2.70	
		MAX82_Z (SC70 only)	T_A = +25°C	2.28	2.32	2.35	
			T_A = T_{MIN} to T_{MAX}	2.25		2.38	
		MAX82_Y (SC70 only)	T_A = +25°C	2.16	2.19	2.22	
			T_A = T_{MIN} to T_{MAX}	2.13		2.25	

ELECTRICAL CHARACTERISTICS (continued)

(V_{CC} = +4.75V to +5.5V for MAX82_L, V_{CC} = +4.5V to +5.5V for MAX82_M, V_{CC} = +3.15V to +3.6V for MAX82_T, V_{CC} = +3V to +3.6V for MAX82_S, V_{CC} = +2.7V to +3.6V for MAX82_R, V_{CC} = +2.38V to +2.75V for MAX82_Z, V_{CC} = +2.25V to +2.75V for MAX82_Y, T_A = T_{MIN} to T_{MAX}, T_A = -40°C to +85°C (SC70), T_A = -40°C to +125°C (SOT23), unless otherwise noted. Typical values are at T_A = +25°C.) (Note 1)

PARAMETER	SYMBOL	CONDITIONS	MIN	TYP	MAX	UNITS
Reset Threshold Hysteresis		MAX82_L/M		10		mV
		MAX82_T/S/R/Z/Y		5		
Reset Threshold Temperature Coefficient				40		ppm/°C
Reset Timeout Period	t_{RP}		140	200	280	ms
V_{CC} to $\overline{RESET}$ Delay		V_{RST} - V_{CC} = 100mV		20		µs
$\overline{RESET}$ Output Voltage	V_{OH}	MAX82_L/M, V_{CC} = V_{RST} max, I_{SOURCE} = 120µA	V_{CC} - 1.5			V
		MAX82_T/S/R/Z/Y, V_{CC} = V_{RST} max, I_{SOURCE} = 30µA	0.8 × V_{CC}			
	V_{OL}	MAX82_L/M, V_{CC} = V_{RST} min, I_{SINK} = 3.2mA			0.4	
		MAX82_T/S/R/Z/Y V_{CC} = V_{RST} min, I_{SINK} = 1.2mA			0.3	
		T_A = 0°C to +70°C, V_{CC} = 1V, V_{CC} falling, I_{SINK} = 50µA			0.3	
		T_A = T_{MIN} to T_{MAX}, V_{CC} = 1.2V, V_{CC} falling, V_{BATT} = 0V, I_{SINK} = 100µA				
$\overline{RESET}$ Output Short-Circuit Current (Note 2)	I_{SOURCE}	MAX82_L/M, $\overline{RESET}$ = 0V, V_{CC} = 5.5V			800	µA
		MAX82_T/S/R/Z/Y, $\overline{RESET}$ = 0V, V_{CC} = 3.6V			400	
RESET Output Voltage	V_{OH}	V_{CC} > 1.8V, I_{SOURCE} = 150µA	0.8 × V_{CC}			V
	V_{OL}	MAX824L/M, MAX825L/M, V_{CC} = V_{RST} max, I_{SINK} = 3.2mA			0.4	
		MAX824T/S/R/Z/Y, MAX825T/S/R/Z/Y, V_{CC} = V_{RST} max, I_{SINK} = 1.2mA			0.3	
WATCHDOG INPUT (MAX823/MAX824)						
Watchdog Timeout Period	t_{WD}		1.12	1.60	2.40	s
WDI Pulse Width	t_{WDI}	V_{IL} = 0.4V, V_{IH} = 0.8 × V_{CC}	50			ns
WDI Input Voltage (Note 3)	V_{IL}				0.3 × V_{CC}	V
	V_{IH}		0.7 × V_{CC}			
WDI Input Current (Note 4)		WDI = V_{CC}, time average		120	160	µA
		WDI = 0, time average	-20	-15		

5-Pin Microprocessor Supervisory Circuits With Watchdog Timer and Manual Reset

ELECTRICAL CHARACTERISTICS (continued)

(V_{CC} = +4.75V to +5.5V for MAX82_L, V_{CC} = +4.5V to +5.5V for MAX82_M, V_{CC} = +3.15V to +3.6V for MAX82_T, V_{CC} = +3V to +3.6V for MAX82_S, V_{CC} = +2.7V to +3.6V for MAX82_R, V_{CC} = +2.38V to +2.75V for MAX82_Z, V_{CC} = +2.25V to +2.75V for MAX82_Y, T_A = T_{MIN} to T_{MAX}, T_A = -40°C to +85°C (SC70), T_A = -40°C to +125°C (SOT23), unless otherwise noted. Typical values are at T_A = +25°C.) (Note 1)

PARAMETER	SYMBOL	CONDITIONS	MIN	TYP	MAX	UNITS
MANUAL RESET INPUT (MAX823/MAX825)						
$\overline{MR}$ Input Voltage	V_{IL}				$0.3 \times V_{CC}$	V
	V_{IH}		$0.7 \times V_{CC}$			
$\overline{MR}$ Pulse Width			1.0			µs
$\overline{MR}$ Noise Immunity (pulse width with no reset)				100		ns
$\overline{MR}$ to Reset Delay				500		ns
$\overline{MR}$ Pullup Resistance (internal)			35	52	75	kΩ

Note 1: Over-temperature limits are guaranteed by design and not production tested.
Note 2: The $\overline{RESET}$ short-circuit current is the maximum pullup current when $\overline{RESET}$ is driven low by a µP bidirectional reset pin.
Note 3: WDI is internally serviced within the watchdog period if WDI is left unconnected.
Note 4: The WDI input current is specified as the average input current when the WDI input is driven high or low. The WDI input is designed to drive a three-stated output device with a 10µA maximum leakage current and a maximum capacitive load of 200pF. This output device must be able to source and sink at least 200µA when active.

5-Pin Microprocessor Supervisory Circuits With Watchdog Timer and Manual Reset

Typical Operating Characteristics

MAX823_, V_{CC} = +5V, T_A = +25°C, unless otherwise noted.)

V_{CC} SUPPLY CURRENT vs. TEMPERATURE

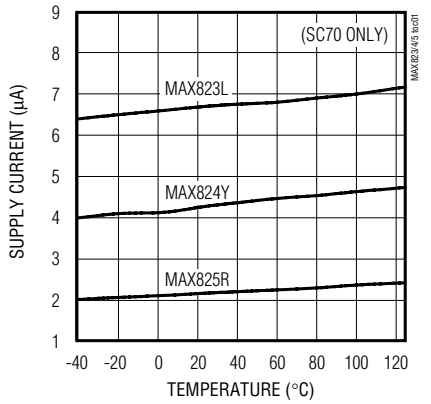

RESET TIMEOUT PERIOD vs. TEMPERATURE

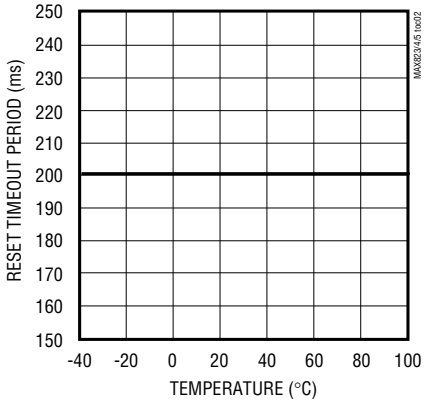

RESET COMPARATOR PROPAGATION DELAY vs. TEMPERATURE

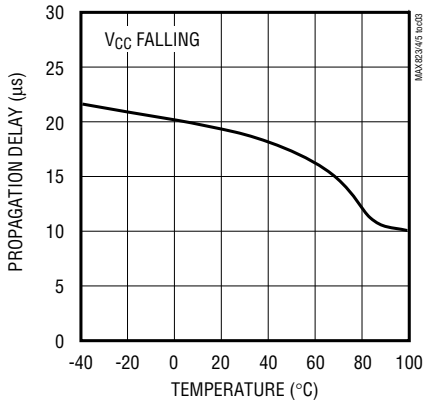

WATCHDOG TIMEOUT PERIOD vs. TEMPERATURE

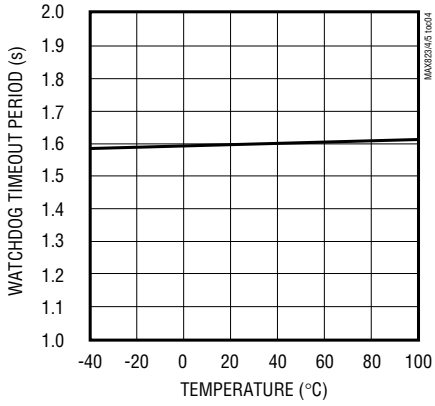

NORMALIZED RESET THRESHOLD VOLTAGE vs. TEMPERATURE

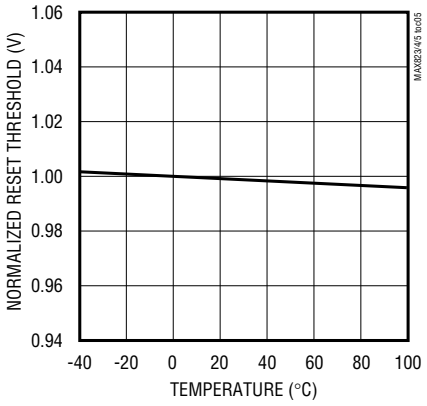

MAXIMUM V_{CC} TRANSIENT DURATION vs. RESET THRESHOLD OVERDRIVE

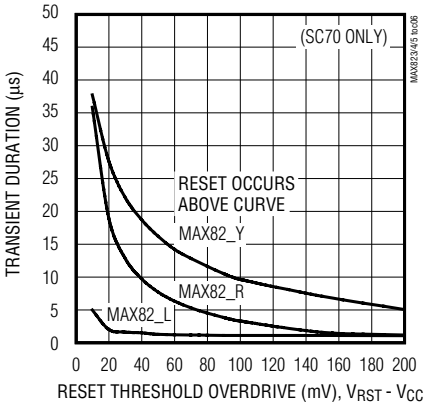

5-Pin Microprocessor Supervisory Circuits With Watchdog Timer and Manual Reset

Pin Description

PIN			NAME	FUNCTION
MAX823	MAX824	MAX825		
1	1	1	$\overline{\text{RESET}}$	Active-Low Reset Output. Pulses low for 200ms when triggered, and remains low whenever V_{CC} is below the reset threshold or when $\overline{\text{MR}}$ is a logic low. It remains low for 200ms after one of the following occurs: V_{CC} rises above the reset threshold, the watchdog triggers a reset, or $\overline{\text{MR}}$ goes low to high.
2	2	2	GND	Ground
3	—	4	$\overline{\text{MR}}$	Manual Reset Input. A logic low on $\overline{\text{MR}}$ asserts reset. Reset remains asserted as long as $\overline{\text{MR}}$ is held low and for 200ms after $\overline{\text{MR}}$ returns high. The active-low input has an internal 52kΩ pullup resistor. It can be driven from a CMOS logic line or shorted to ground with a switch. Leave open or connect to V_{CC} if unused.
—	3	3	RESET	Active-High Reset Output. Inverse of $\overline{\text{RESET}}$.
4	4	—	WDI	Watchdog Input. If WDI remains either high or low for longer than the watchdog timeout period, the internal watchdog timer runs out and a reset is triggered. The internal watchdog timer clears whenever reset is asserted, or whenever WDI sees a rising or falling edge. If WDI is left unconnected or is connected to a three-stated buffer output, the watchdog feature is disabled.
5	5	5	V_{CC}	Supply Voltage

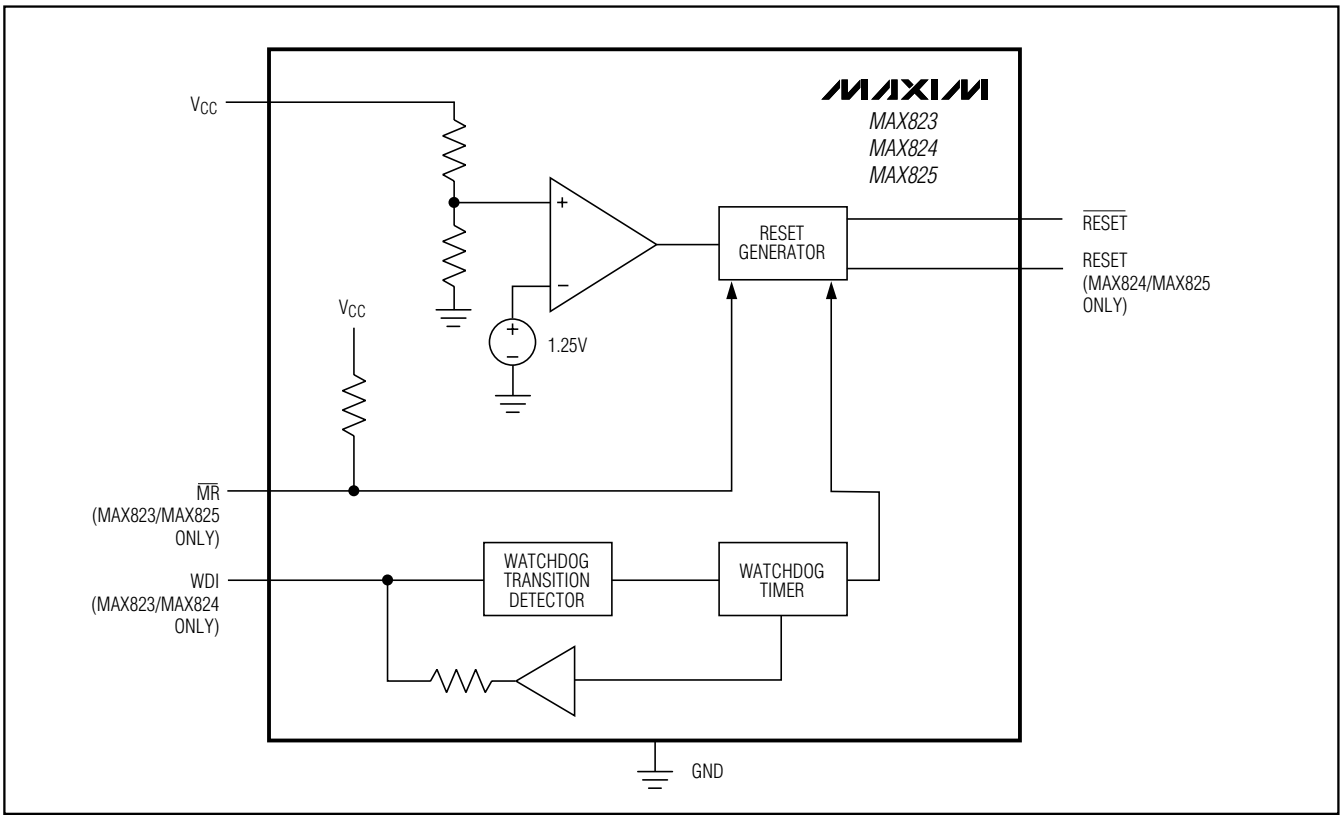

Figure 1. Functional Diagram

5-Pin Microprocessor Supervisory Circuits With Watchdog Timer and Manual Reset

Detailed Description

$\overline{\text{RESET}}$ Output

A microprocessor's (µP's) reset input starts the µP in a known state. The MAX823/MAX824/MAX825 µP supervisory circuits assert a reset to prevent code-execution errors during power-up, power-down, and brownout conditions. $\overline{\text{RESET}}$ is guaranteed to be a logic low for V_{CC} down to 1V. Once V_{CC} exceeds the reset threshold, an internal timer keeps $\overline{\text{RESET}}$ low for the specified reset timeout period (t_{RP}); after this interval, $\overline{\text{RESET}}$ returns high (Figure 2).

If a brownout condition occurs (V_{CC} dips below the reset threshold), $\overline{\text{RESET}}$ goes low. Each time $\overline{\text{RESET}}$ is asserted it stays low for the reset timeout period. Any time V_{CC} goes below the reset threshold the internal timer restarts. $\overline{\text{RESET}}$ both sources and sinks current. $\overline{\text{RESET}}$ on the MAX824/MAX825 is the inverse of $\overline{\text{RESET}}$.

Manual Reset Input (MAX823/MAX825)

Many µP-based products require manual reset capability, allowing the operator, a test technician, or external logic circuitry to initiate a reset. On the MAX823/MAX825, a logic low on $\overline{\text{MR}}$ asserts reset. Reset remains asserted while $\overline{\text{MR}}$ is low, and for t_{RP} (200ms nominal) after it returns high. $\overline{\text{MR}}$ has an internal 52kΩ pullup resistor, so it can be left open if not used. This input can be driven with CMOS logic levels or with open-drain/collector outputs. Connect a normally open momentary switch from $\overline{\text{MR}}$ to GND to create a manual-reset function; external debounce circuitry is not required. If $\overline{\text{MR}}$ is driven from long cables or the device is used in a noisy environment, connect a 0.1µF capacitor from $\overline{\text{MR}}$ to GND to provide additional noise immunity.

Watchdog Input (MAX823/MAX824)

In the MAX823/MAX824, the watchdog circuit monitors the µP's activity. If the µP does not toggle the watchdog input (WDI) within t_{WD} (1.6s), reset asserts. The internal 1.6s timer is cleared by either a reset pulse or by toggling WDI, which detects pulses as short as 50ns. While reset is asserted, the timer remains cleared and does not count. As soon as reset is released, the timer starts counting (Figure 3).

Disable the watchdog function by leaving WDI unconnected or by three-stating the driver connected to WDI. The watchdog input is internally driven low during the first 7/8 of the watchdog timeout period and high for the last 1/8 of the watchdog timeout period. When WDI is left unconnected, this internal driver clears the 1.6s timer every 1.4s. When WDI is three-stated or unconnected, the maximum allowable leakage current is 10µA and the maximum allowable load capacitance is 200pF.

Applications Information

Watchdog Input Current

The MAX823/MAX824 WDI inputs are internally driven through a buffer and series resistor from the watchdog counter (Figure 1). When WDI is left unconnected, the watchdog timer is serviced within the watchdog timeout period by a low-high-low pulse from the counter chain. For minimum watchdog input current (minimum overall power consumption), leave WDI low for the majority of the watchdog timeout period, pulsing it low-high-low once within the first 7/8 of the watchdog timeout period to reset the watchdog timer. If WDI is externally driven high for the majority of the timeout period, up to 160µA can flow into WDI.

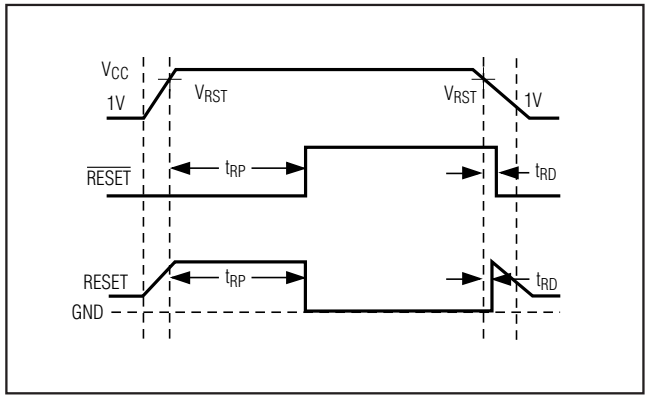

Figure 2. Reset Timing Diagram

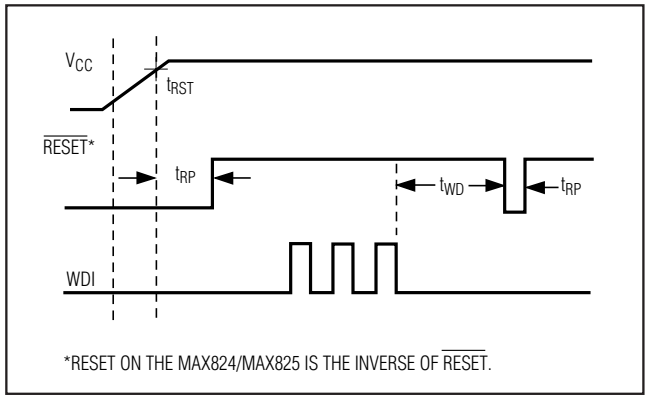

Figure 3. MAX823/MAX824 Watchdog Timing Relationship

5-Pin Microprocessor Supervisory Circuits With Watchdog Timer and Manual Reset

Interfacing to µPs with Bidirectional Reset Pins

The $\overline{\text{RESET}}$ output maximum pullup current is 800µA for L/M versions (400µA for T/S/R/Z/Y versions). This allows µPs with bidirectional resets, such as the 68HC11, to force $\overline{\text{RESET}}$ low when the MAX823/MAX824/MAX825 are pulling $\overline{\text{RESET}}$ high (Figure 4).

Negative-Going V_{CC} Transients

These supervisors are relatively immune to short-duration, negative-going V_{CC} transients (glitches), which usually do not require the entire system to shut down. Resets are issued to the µP during power-up, power-down, and brownout conditions.

The *Typical Operating Characteristics* show a graph of the MAX823_'s Maximum V_{CC} Transient Duration vs. Reset Threshold Overdrive, for which reset pulses are **not** generated. The graph was produced using negative-going V_{CC} pulses, starting at 5V and ending below the reset threshold by the magnitude indicated (reset threshold overdrive). The graph shows the maximum pulse width that a negative-going V_{CC} transient can typically have without triggering a reset pulse. As the amplitude of the transient increases (i.e., goes farther below the reset threshold), the maximum allowable pulse width decreases.

An optional 0.1µF bypass capacitor mounted close to V_{CC} provides additional transient immunity.

Watchdog Software Considerations (MAX823/MAX824)

One way to help the watchdog timer monitor software execution more closely is to set and reset the watchdog input at different points in the program, rather than pulsing the watchdog input high-low-high or low-high-low. This technique avoids a stuck loop, in which the watchdog timer would continue to be reset inside the loop, keeping the watchdog from timing out.

Figure 5 shows an example of a flow diagram where the I/O driving the watchdog input is set high at the beginning of the program, set low at the beginning of every subroutine or loop, then set high again when the program returns to the beginning. If the program should hang in any subroutine, the problem would quickly be corrected, since the I/O is continually set low and the watchdog timer is allowed to time out, causing a reset or interrupt to be issued. As described in the *Watchdog Input Current* section, this scheme results in higher time average WDI input current than does leaving WDI low for the majority of the timeout period and periodically pulsing it low-high-low.

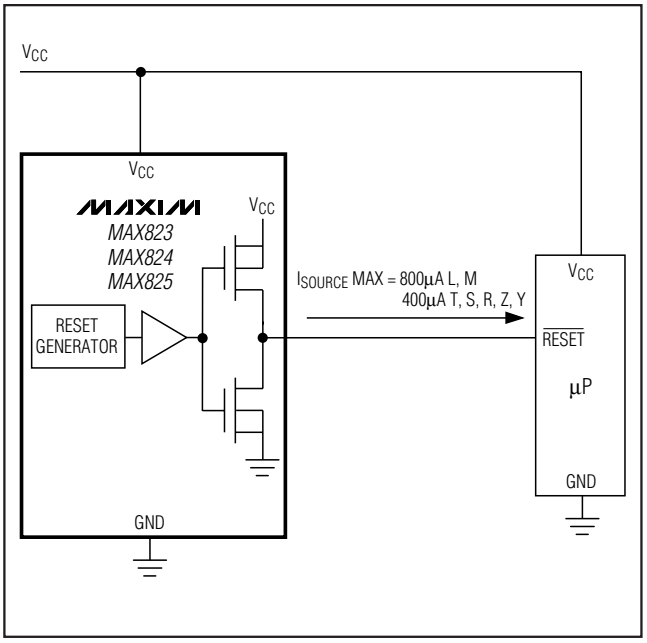

Figure 4. Interfacing to µPs with Bidirectional Resets

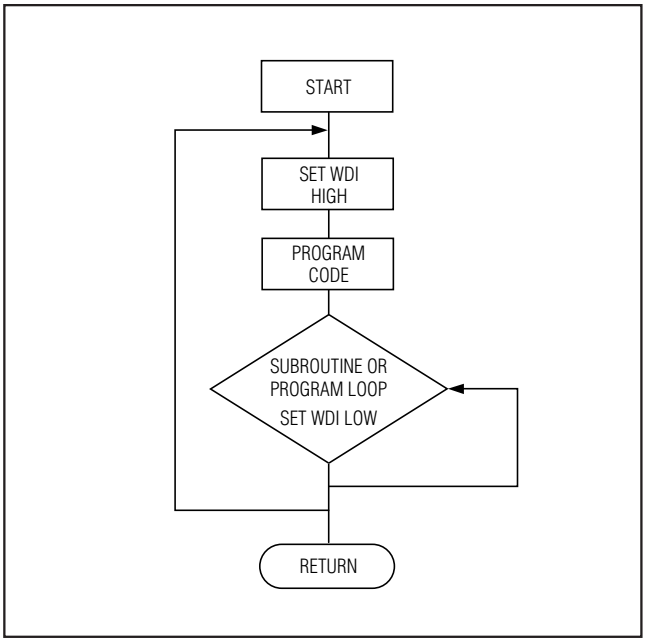

Figure 5. Watchdog Flow Diagram

5-Pin Microprocessor Supervisory Circuits With Watchdog Timer and Manual Reset

Typical Operating Circuit

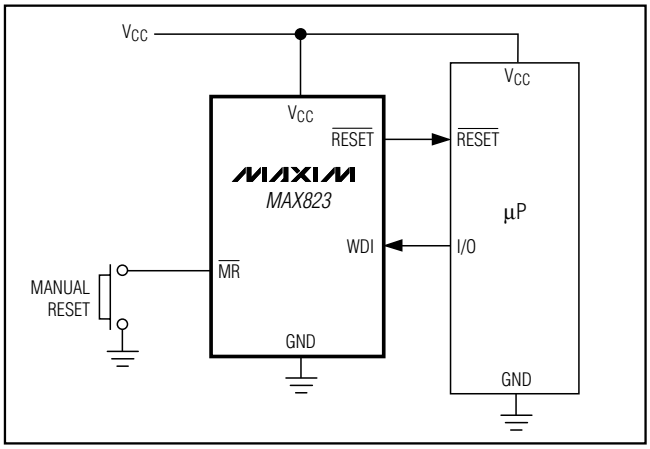

Chip Information

TRANSISTOR COUNT: 607

PROCESS TECHNOLOGY: BiCMOS

Ordering Information (continued)

PART†	TEMP. RANGE	PIN-PACKAGE
MAX824_EUK-T	-40°C to +125°C	5 SOT23-5
MAX825_EXK-T	-40°C to +85°C	5 SC70-5
MAX825_EUK-T	-40°C to +125°C	5 SOT23-5

†Insert the desired suffix letter (from the Reset Threshold table) into the blank to complete the part number. All devices are available in tape-and-reel only. There is a 2,500 piece minimum order increment. Devices are available in both leaded and lead-free packaging. Specify lead-free by replacing "-T" with "+T" when ordering.

Marking Information

MARKING INFORMATION (TOP)
XXXX (SOT ONLY)

AAAI = MAX823L
AAAJ = MAX823M
AAAK = MAX823T
AAAL = MAX823S
AAAM = MAX823R
AAAN = MAX824L
AAAO = MAX824M
AAAP = MAX824T
AAAQ = MAX824S
AAAR = MAX824R
AAAS = MAX825L
AAAT = MAX825M
AAAU = MAX825T
AAAV = MAX825S
AAAW = MAX825R

MARKING INFORMATION (TOP)
XXXX (SC70 ONLY)

AAL = MAX823L
AAM = MAX823M
AAP = MAX823R
AAO = MAX823S
AAN = MAX823T
AAR = MAX823Y
AAQ = MAX823Z
AAS = MAX824L
AAT = MAX824M
AAW = MAX824R
AAV = MAX824S
AAU = MAX824T
AAY = MAX824Y
AAX = MAX824Z
AAZ = MAX825L
ABA = MAX825M
ABD = MAX825R
ABC = MAX825S
ABB = MAX825T
ABF = MAX825Y
ABE = MAX825Z

5-Pin Microprocessor Supervisory Circuits With Watchdog Timer and Manual Reset

Package Information

(The package drawing(s) in this data sheet may not reflect the most current specifications. For the latest package outline information, go to **www.maxim-ic.com/packages**.)

SOT-23 5L .EPS

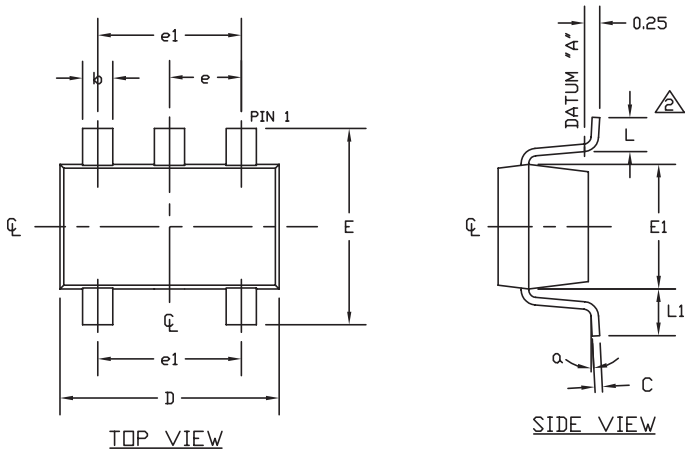

SYMBOL	MIN	MAX
A	0.90	1.45
A1	0.00	0.15
A2	0.90	1.30
b	0.35	0.50
C	0.08	0.20
D	2.80	3.00
E	2.60	3.00
E1	1.50	1.75
L	0.35	0.60
L1	0.60 REF	
e	0.95 BSC.	
e1	1.90 BSC.	
a	0°	8°

NOTES:
1. ALL DIMENSIONS ARE IN MILLIMETERS.
2. FOOT LENGTH MEASURED AT INTERCEPT POINT BETWEEN DATUM A & LEAD SURFACE.
3. PACKAGE OUTLINE EXCLUSIVE OF MOLD FLASH & METAL BURR. MOLD FLASH, PROTRUSION OR METAL BURR SHOULD NOT EXCEED 0.25 MM.
4. PACKAGE OUTLINE INCLUSIVE OF SOLDER PLATING.
5. MEETS JEDEC MO178, VARIATION AA.
6. LEADS TO BE COPLANAR WITHIN 0.10 mm.
7. SOLDER THICKNESS MEASURED AT FLAT SECTION OF LEAD BETWEEN 0.08mm AND 0.15mm FROM LEAD TIP.

DALLAS SEMICONDUCTOR MAXIM
PROPRIETARY INFORMATION

TITLE: PACKAGE OUTLINE, SOT-23, 5L

APPROVAL	DOCUMENT CONTROL NO.	REV.	
	21-0057	E	1/1

Maxim cannot assume responsibility for use of any circuitry other than circuitry entirely embodied in a Maxim product. No circuit patent licenses are implied. Maxim reserves the right to change the circuitry and specifications without notice at any time.

© 2005 Maxim Integrated Products Printed USA MAXIM is a registered trademark of Maxim Integrated Products, Inc.