19-0194; Rev 1; 2/97

MAXIM

Ultra Low-Power, Low-Cost Comparators with 2% Reference

General Description

The MAX931-MAX934 single, dual, and quad micropower, low-voltage comparators plus an on-board 2% accurate reference feature the lowest power consumption available. These comparators draw less than 4µA supply current over temperature (MAX931), and include an internal 1.182V ±2% voltage reference, programmable hysteresis, and TTL/CMOS outputs that sink and source current.

Ideal for 3V or 5V single-supply applications, the MAX931-MAX934 operate from a single +2.5V to +11V supply (or a ±1.25V to ±5V dual supply), and each comparator's input voltage range extends from the negative supply rail to within 1.3V of the positive supply.

The MAX931-MAX934's unique output stage continuously sources as much as 40mA. And by eliminating power-supply glitches that commonly occur when comparators change logic states, the MAX931-MAX934 minimize parasitic feedback, which makes them easier to use.

The single MAX931 and dual MAX932/MAX933 provide a unique and simple method for adding hysteresis without feedback and complicated equations, using the HYST pin and two resistors.

For applications that require increased precision with similar power requirements, see the MAX921-MAX924 data sheet. These devices include a 1% precision reference.

PART	INTERNAL 2% REFERENCE	COMPARATORS PER PACKAGE	INTERNAL HYSTERESIS	PACK-AGE
MAX931	Yes	1	Yes	8-Pin DIP/SO/ µMAX
MAX932	Yes	2	Yes	8-Pin DIP/SO/ µMAX
MAX933	Yes	2	Yes	8-Pin DIP/SO/ µMAX
MAX934	Yes	4	No	16-Pin DIP/SO

Applications

Battery-Powered Systems

Threshold Detectors

Window Comparators

Oscillator Circuits

Alarm Circuits

Features

- ♦ **Ultra-Low 4µA Max Quiescent Current Over Extended Temp. Range (MAX931)**
- ♦ **Power Supplies:**
  Single +2.5V to +11V
  Dual ±1.25V to ±5.5V
- ♦ **Input Voltage Range Includes Negative Supply**
- ♦ **Internal 1.182V ±2% Bandgap Reference**
- ♦ **Adjustable Hysteresis**
- ♦ **TTL-/CMOS-Compatible Outputs**
- ♦ **12µs Propagation Delay (10mV Overdrive)**
- ♦ **No Switching Crowbar Current**
- ♦ **40mA Continuous Source Current**
- ♦ **Available in Space-Saving µMAX Package**

Ordering Information

PART	TEMP. RANGE	PIN-PACKAGE
MAX931CPA	0°C to +70°C	8 Plastic DIP
MAX931CSA	0°C to +70°C	8 SO
MAX931CUA	0°C to +70°C	8 µMAX
MAX931EPA	-40°C to +85°C	8 Plastic DIP
MAX931ESA	-40°C to +85°C	8 SO

Ordering Information continued on last page.

For similar devices guaranteed over the military temp. range, see the MAX921-MAX924 data sheet. The MAX931, MAX933, and MAX934 are pin-compatible with the 1% accurate MAX921, MAX923, and MAX924, respectively. The MAX932 and MAX922 are not pin-compatible.

Typical Operating Circuit

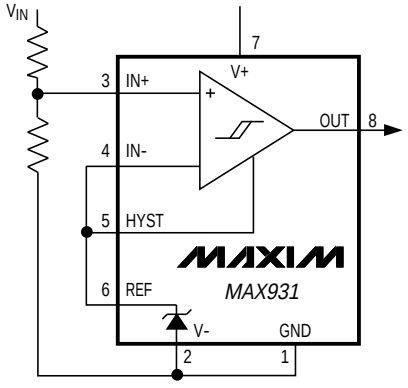

THRESHOLD DETECTOR

For free samples & the latest literature: http://www.maxim-ic.com, or phone 1-800-998-8800

Ultra Low-Power, Low-Cost Comparators with 2% Reference

ABSOLUTE MAXIMUM RATINGS

V+ to V-, V+ to GND, GND to V-.....-0.3V, +12V
Inputs
  Current, IN_+, IN_-, HYST.....20mA
  Voltage, IN_+, IN_-, HYST.....(V+ + 0.3V) to (V- – 0.3V)
Outputs
  Current, REF.....20mA
  Current, OUT_.....50mA
  Voltage, REF .....(V+ + 0.3V) to (V- – 0.3V)
  Voltage, OUT_ (MAX931/934) .....(V+ + 0.3V) to (GND – 0.3V)
  Voltage, OUT_ (MAX932/933).....(V+ + 0.3V) to (V- – 0.3V)
  OUT_ Short-Circuit Duration (V+ ≤ 5.5V) .....Continuous

Continuous Power Dissipation (T_A = +70°C)
  8-Pin Plastic DIP (derate 9.09mW/°C above +70°C) ...727mW
  8-Pin SO (derate 5.88mW/°C above +70°C).....471mW
  8-Pin µMAX (derate 4.1mW/°C above +70°C) 330mW
  16-Pin Plastic DIP (derate 10.53mW/°C above +70°C)..842mW
  16-Pin SO (derate 8.70mW/°C above +70°C) 696mW
Operating Temperature Ranges:
  MAX93_C_ _ .....0°C to +70°C
  MAX93_E_ _.....-40°C to +85°C
Storage Temperature Range .....-65°C to +150°C
Lead Temperature (soldering, 10sec) .....+300°C

Stresses beyond those listed under "Absolute Maximum Ratings" may cause permanent damage to the device. These are stress ratings only, and functional operation of the device at these or any other conditions beyond those indicated in the operational sections of the specifications is not implied. Exposure to absolute maximum rating conditions for extended periods may affect device reliability.

ELECTRICAL CHARACTERISTICS—5V Operation

(V+ = 5V, V- = GND = 0V, T_A = T_{MIN} to T_{MAX}, unless otherwise noted.)

PARAMETER	CONDITIONS			MIN	TYP	MAX	UNITS
POWER REQUIREMENTS							
Supply Voltage Range	(Note 1)			2.5		11	V
Supply Current	IN+ = IN- + 100mV	MAX931, HYST = REF	T_A = +25°C		2.5	3.2	µA
			C/E temp. ranges			4	
		MAX932, HYST = REF	T_A = +25°C		3.1	4.5	
			C/E temp. ranges			6	
		MAX933, HYST = REF	T_A = +25°C		3.1	4.5	
			C/E temp. ranges			6	
		MAX934	T_A = +25°C		5.5	6.5	
			C/E temp. ranges			8.5	
COMPARATOR							
Input Offset Voltage	V_{CM} = 2.5V					±10	mV
Input Leakage Current (IN-, IN+)	IN+ = IN- = 2.5V, C/E temp. ranges				±0.01	±5	nA
Input Leakage Current (HYST)	MAX931, MAX932, MAX933				±0.02		nA
Input Common-Mode Voltage Range				V-		V+ – 1.3	V
Common-Mode Rejection Ratio	V- to (V+ – 1.3V)				0.1	1.0	mV/V
Power-Supply Rejection Ratio	V+ = 2.5V to 11V				0.1	1.0	mV/V
Voltage Noise	100Hz to 100kHz				20		$µV_{RMS}$
Hysteresis Input Voltage Range	MAX931, MAX932, MAX933			REF – 0.05		REF	V
Response Time	T_A = +25°C, 100pF load		Overdrive = 10mV		12		µs
			Overdrive = 100mV		4		

ELECTRICAL CHARACTERISTICS—5V Operation (continued)

(V+ = 5V, V- = GND = 0V, T_A = T_{MIN} to T_{MAX}, unless otherwise noted.)

PARAMETER	CONDITIONS		MIN	TYP	MAX	UNITS
Output High Voltage	C/E temp. ranges, I_{OUT} = 17mA		V+ – 0.4			V
Output Low Voltage	C/E temp. ranges, I_{OUT} = 1.8mA	MAX932, MAX933			V- + 0.4	V
		MAX931, MAX934			GND + 0.4	
REFERENCE						
Reference Voltage	C temp. range		1.158	1.182	1.206	V
	E temp. range		1.147		1.217	
Source Current	T_A = +25°C		15	25		µA
	C/E temp. ranges		6			
Sink Current	T_A = +25°C		8	15		µA
	C/E temp. ranges		4			
Voltage Noise	100Hz to 100kHz			100		μV_{RMS}

Note 1: MAX934 comparators work below 2.5V, see *Low-Voltage Operation* section for more details.

ELECTRICAL CHARACTERISTICS—3V Operation

(V+ = 3V, V- = GND = 0V, T_A = T_{MIN} to T_{MAX}, unless otherwise noted.)

PARAMETER	CONDITIONS			MIN	TYP	MAX	UNITS
POWER REQUIREMENTS							
Supply Current	IN+ = (IN- + 100mV)	MAX931, HYST = REF	T_A = +25°C		2.4	3.0	µA
			C/E temp. ranges			3.8	
		MAX932, HYST = REF	T_A = +25°C		3.4	4.3	
			C/E temp. ranges			5.8	
		MAX933, HYST = REF	T_A = +25°C		3.4	4.3	
			C/E temp. ranges			5.8	
		MAX934	T_A = +25°C		5.2	6.2	
			C/E temp. ranges			8.0	
COMPARATOR							
Input Offset Voltage	V_{CM} = 1.5V					±10	mV
Input Leakage Current (IN-, IN+)	IN+ = IN- = 1.5V, C/E temp. ranges				±0.01	±1	nA
Input Leakage Current (HYST)	MAX931, MAX932, MAX933				±0.02		nA

ELECTRICAL CHARACTERISTICS—3V Operation (continued)

(V+ = 3V, V- = GND = 0V, T_A = T_{MIN} to T_{MAX}, unless otherwise noted.)

PARAMETER	CONDITIONS		MIN	TYP	MAX	UNITS
Input Common-Mode Voltage Range			V-		V+ – 1.3	V
Common-Mode Rejection Ratio	V- to (V+ – 1.3V)			0.2	1	mV/V
Power-Supply Rejection Ratio	V+ = 2.5V to 11V			0.1	1	mV/V
Voltage Noise	100Hz to 100kHz			20		μV_{RMS}
Hysteresis Input Voltage Range	MAX931, MAX932, MAX933		REF – 0.05		REF	V
Response Time	T_A = +25°C, 100pF load	Overdrive = 10mV		14		µs
		Overdrive = 100mV		5		
Output High Voltage	C/E temp. ranges, I_{OUT} = 10mA		V+ – 0.4			V
Output Low Voltage	C/E temp. ranges, I_{OUT} = 0.8mA	MAX932, MAX933			V- + 0.4	V
		MAX931			GND + 0.4	
REFERENCE						
Reference Voltage	C temp. range		1.158	1.182	1.206	V
	E temp. range		1.147		1.217	
Source Current	T_A = +25°C		15	25		µA
	C/E temp. ranges		6			
Sink Current	T_A = +25°C		8	15		µA
	C/E temp. ranges		4			
Voltage Noise	100Hz to 100kHz			100		μV_{RMS}

Typical Operating Characteristics

(V+ = 5V, V- = GND, T_A = +25°C, unless otherwise noted.)

OUTPUT VOLTAGE LOW vs. LOAD CURRENT

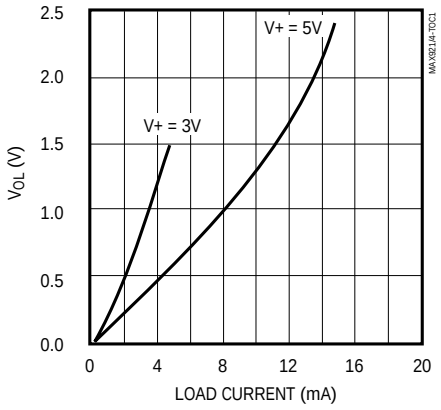

OUTPUT VOLTAGE HIGH vs. LOAD CURRENT

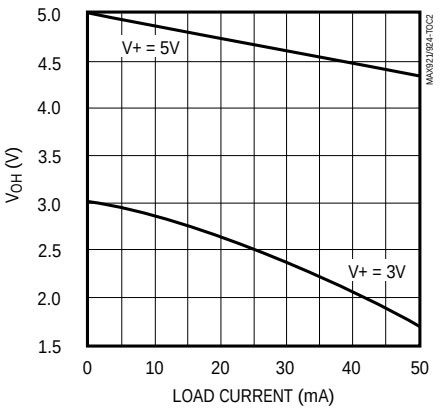

REFERENCE OUTPUT VOLTAGE vs. OUTPUT LOAD CURRENT

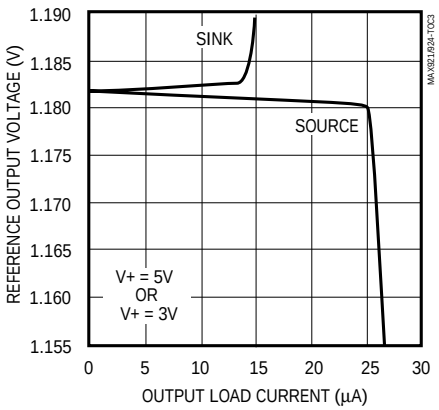

REFERENCE VOLTAGE vs. TEMPERATURE

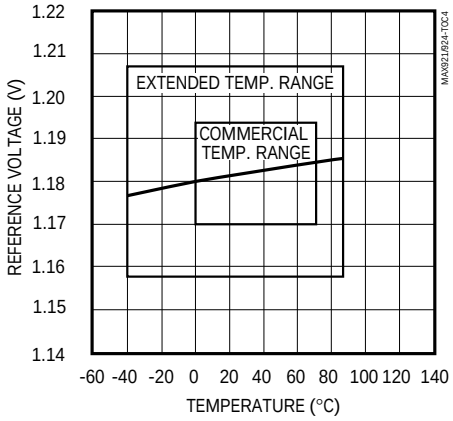

MAX931 SUPPLY CURRENT vs. TEMPERATURE

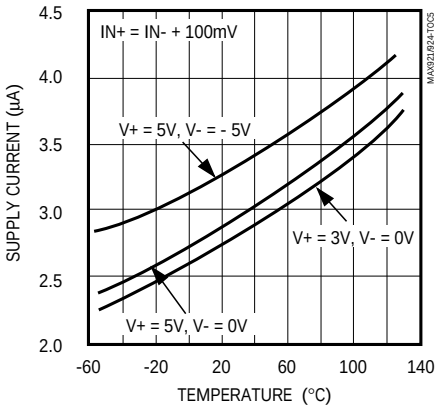

MAX932 SUPPLY CURRENT vs. TEMPERATURE

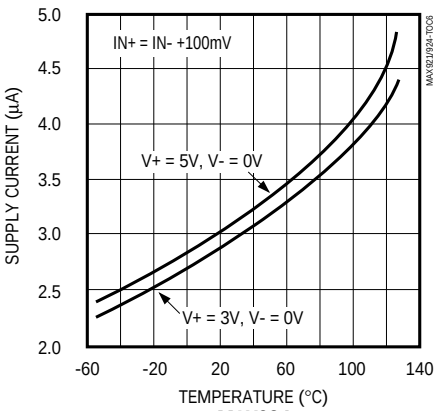

MAX933 SUPPLY CURRENT vs. TEMPERATURE

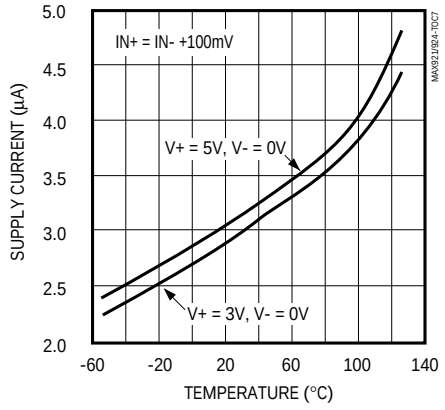

MAX934 SUPPLY CURRENT vs. TEMPERATURE

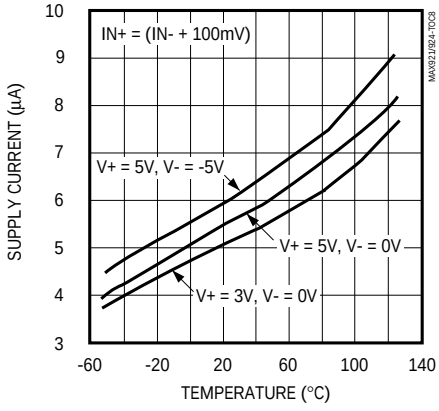

MAX934 SUPPLY CURRENT vs. LOW SUPPLY VOLTAGES

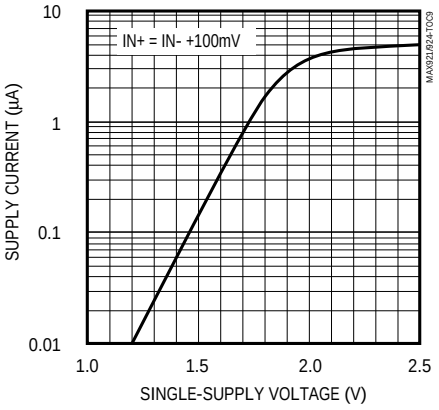

Ultra Low-Power, Low-Cost Comparators with 2% Reference

Typical Operating Characteristics (continued)

(V+ = 5V, V- = GND, T_A = +25°C, unless otherwise noted.)

HYSTERESIS CONTROL

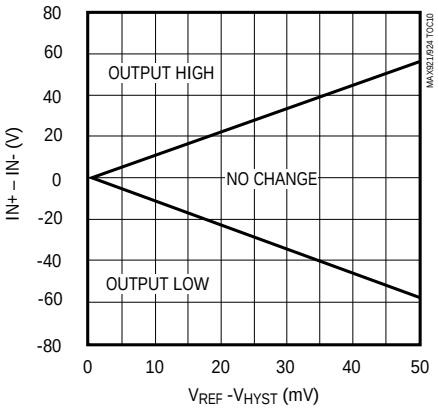

TRANSFER FUNCTION

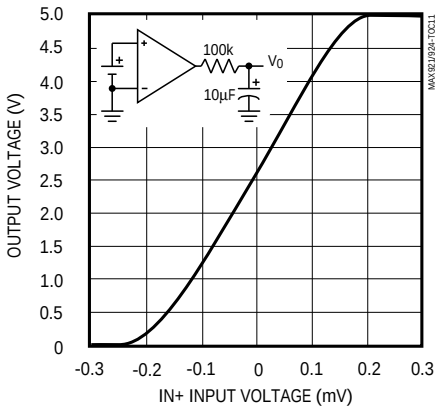

RESPONSE TIME vs. LOAD CAPACITANCE

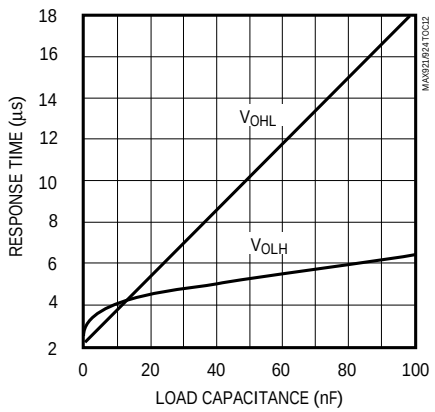

RESPONSE TIME FOR VARIOUS INPUT OVERDRIVES

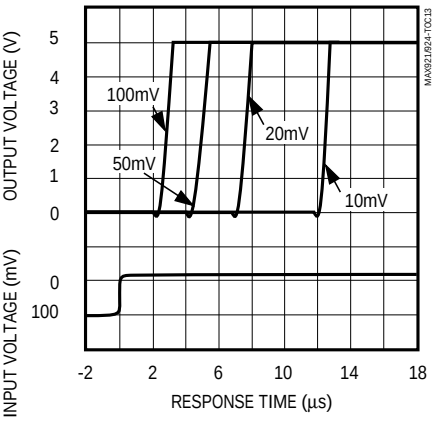

RESPONSE TIME FOR VARIOUS INPUT OVERDRIVES

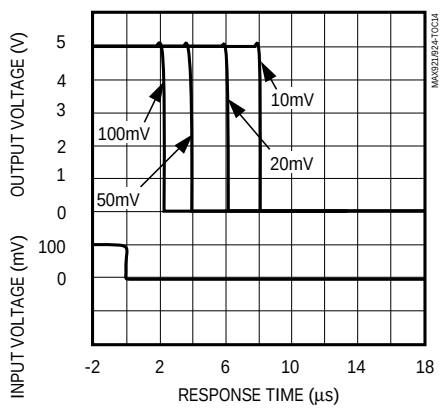

MAX934 RESPONSE TIME AT LOW SUPPLY VOLTAGES

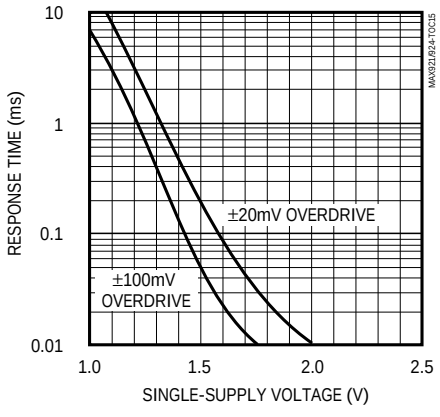

MAX934 OUTPUT DRIVE AT LOW SUPPLY VOLTAGES

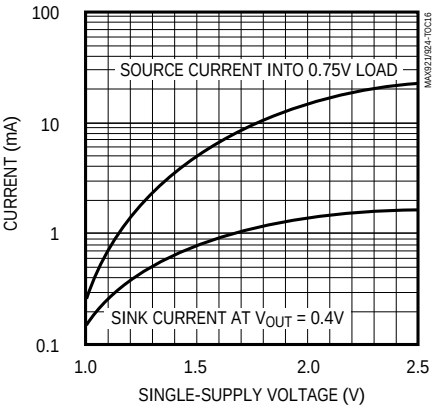

SHORT-CIRCUIT SOURCE CURRENT vs. SUPPLY VOLTAGE

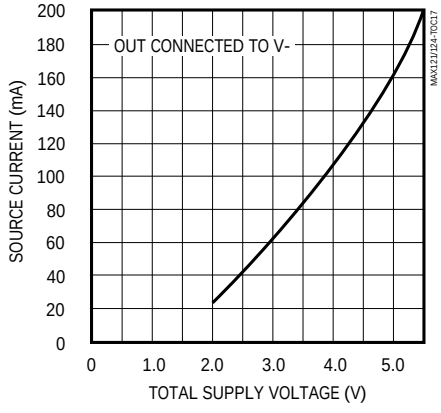

SHORT-CIRCUIT SINK CURRENT vs. SUPPLY VOLTAGE

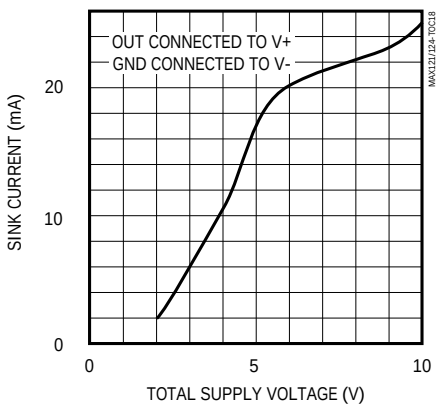

Pin Descriptions

PIN			NAME	FUNCTION
MAX931	MAX932	MAX933		
1	–	–	GND	Ground. Connect to V- for single-supply operation. Output swings from V+ to GND.
–	1	1	OUTA	Comparator A output. Sinks and sources current. Swings from V+ to V-.
2	2	2	V-	Negative supply. Connect to ground for single-supply operation (MAX931).
3	–	–	IN+	Noninverting comparator input
–	3	3	INA+	Noninverting input of comparator A
4	–	–	IN-	Inverting comparator input
–	4	–	INB+	Noninverting input of comparator B
–	–	4	INB-	Inverting input of comparator B
5	5	5	HYST	Hysteresis input. Connect to REF if not used. Input voltage range is from V_{REF} to V_{REF} - 50mV.
6	6	6	REF	Reference output. 1.182V with respect to V-.
7	7	7	V+	Positive supply
8	–	–	OUT	Comparator output. Sinks and sources current. Swings from V+ to GND.
–	8	8	OUTB	Comparator B output. Sinks and sources current. Swings from V+ to V-.

PIN	NAME	FUNCTION
MAX934		
1	OUTB	Comparator B output. Sinks and sources current. Swings from V+ to GND.
2	OUTA	Comparator A output. Sinks and sources current. Swings from V+ to GND.
3	V+	Positive supply
4	INA-	Inverting input of comparator A
5	INA+	Noninverting input of comparator A
6	INB-	Inverting input of comparator B
7	INB+	Noninverting input of comparator B
8	REF	Reference output. 1.182V with respect to V-.
9	V-	Negative supply. Connect to ground for single-supply operation.
10	INC-	Inverting input of comparator C
11	INC+	Noninverting input of comparator C
12	IND-	Inverting input of comparator D
13	IND+	Noninverting input of comparator D
14	GND	Ground. Connect to V- for single-supply operation.
15	OUTD	Comparator D output. Sinks and sources current. Swings from V+ to GND.
16	OUTC	Comparator C output. Sinks and sources current. Swings from V+ to GND.

Ultra Low-Power, Low-Cost Comparators with 2% Reference

Detailed Description

The MAX931-MAX934 comprise various combinations of a micropower 1.182V reference and a micropower comparator. The *Typical Operating Circuit* shows the MAX931 configuration, and Figures 1a-1c show the MAX932/MAX933/MAX934 configurations.

Each comparator continuously sources up to 40mA, and the unique output stage eliminates crowbar glitches during output transitions. This makes them immune to parasitic feedback (which can cause instability) and provides excellent performance, even when circuit-board layout is not optimal.

Internal hysteresis in the MAX931/MAX932/MAX933 provides the easiest method for implementing hysteresis. It also produces faster hysteresis action and consumes much less current than circuits using external positive feedback.

Power-Supply and Input Signal Ranges

This family of devices operates from a single +2.5V to +11V power supply. The MAX931 and MAX934 have a separate ground for the output driver, allowing operation with dual supplies ranging from ±1.25V to ±5.5V. Connect V- to GND when operating the MAX931 and the MAX934 from a single supply. The maximum supply voltage in this case is still 11V.

For proper comparator operation, the input signal can be driven from the negative supply (V-) to within one volt of the positive supply (V+ - 1V). The guaranteed common-mode input voltage range extends from V- to (V+ - 1.3V). The inputs can be taken above and below the supply rails by up to 300mV without damage.

Operating the MAX931 and MAX934 at ±5V provides TTL/CMOS compatibility when monitoring bipolar input signals. TTL compatibility for the MAX932 and MAX933 is achieved by operation from a single +5V supply.

Low-Voltage Operation: V+ = 1V (MAX934 Only)

The guaranteed minimum operating voltage is 2.5V (or ±1.25V). As the total supply voltage is reduced below 2.5V, the performance degrades and the supply

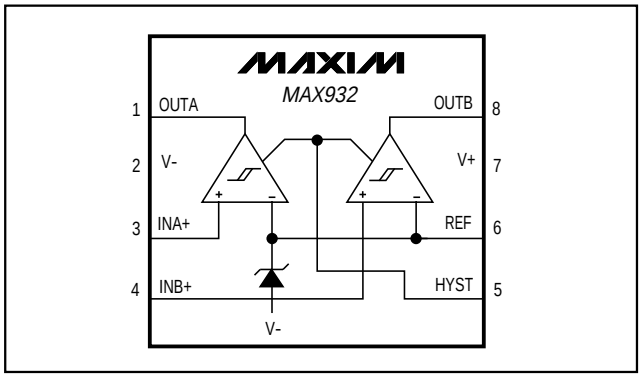

Figure 1a. MAX932 Functional Diagram

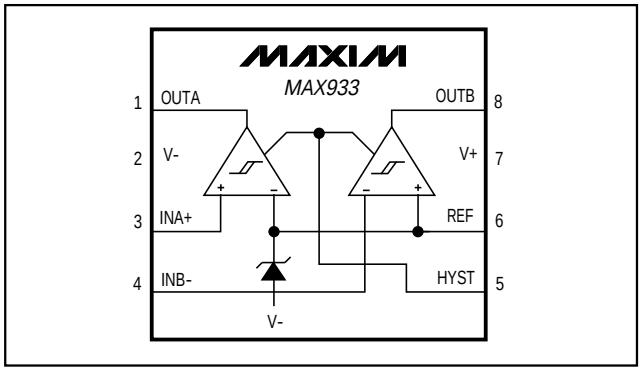

Figure 1b. MAX933 Functional Diagram

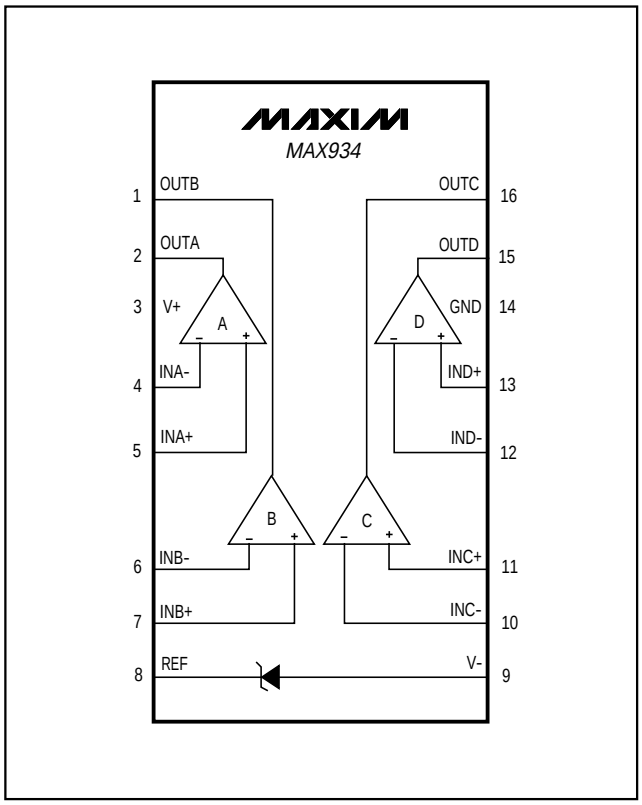

Figure 1c. MAX934 Functional Diagram

current falls. The reference will not function below about 2.2V, although the comparators will continue to operate with a total supply voltage as low as 1V. While the MAX934 has comparators that may be used at supply voltages below 2V, the MAX931, MAX932, and MAX933 may not be used with supply voltages significantly below 2.5V.

At low supply voltages, the comparators' output drive is reduced and the propagation delay increases (see *Typical Operating Characteristics*). The useful input voltage range extends from the negative supply to a little under 1V below the positive supply, which is slightly closer to the positive rail than the device operating from higher supply voltages. Test your prototype over the full temperature and supply-voltage range if operation below 2.5V is anticipated.

Comparator Output

With 100mV of overdrive, propagation delay is typically 3µs. The *Typical Operating Characteristics* show the propagation delay for various overdrive levels.

The MAX931 and MAX934 output swings from V+ to GND, so TTL compatibility is assured by using a +5V ±10% supply. The negative supply does not affect the output swing, and can range from 0V to -5V ±10%.

The MAX932 and MAX933 do not have a GND pin, and their outputs swing from V+ to V-. Connect V- to ground and V+ to a +5V supply to achieve TTL compatibility.

The MAX931-MAX934's unique design achieves an output source current of more than 40mA and a sink current of over 5mA, while keeping quiescent currents in the microampere range. The output can source 100mA (at V+ = 5V) for short pulses, as long as the package's maximum power dissipation is not exceeded. The output stage does not generate crowbar switching currents during transitions, which minimizes feedback through the supplies and helps ensure stability without bypassing.

Voltage Reference

The internal bandgap voltage reference has an output of 1.182V above V-. Note that the REF voltage is referenced to V-, not to GND. Its accuracy is ±2% in the range 0°C to +70°C. The REF output is typically capable of sourcing 15µA and sinking 8µA. Do not bypass the REF output. For applications that require a 1% precision reference, see the MAX921-MAX924 data sheet.

Noise Considerations

Although the comparators have a very high gain, useful gain is limited by noise. This is shown in the Transfer Function graph (see *Typical Operating Characteristics*). As the input voltage approaches the comparator's offset, the output begins to bounce back and forth; this peaks when $V_{IN} = V_{OS}$. (The lowpass filter shown on the graph averages out the bouncing, making the transfer function easy to observe.) Consequently, the comparator has an effective wideband peak-to-peak noise of around 0.3mV. The voltage reference has peak-to peak noise approaching 1mV. Thus, when a comparator is used with the reference, the combined peak-to-peak noise is about 1mV. This, of course, is much higher than the RMS noise of the individual components. Care should be taken in the layout to avoid capacitive coupling from any output to the reference pin. Crosstalk can significantly increase the actual noise of the reference.

Applications Information

Hysteresis

Hysteresis increases the comparators' noise margin by increasing the upper threshold and decreasing the lower threshold (see Figure 2).

Hysteresis (MAX931/MAX932/MAX933)

To add hysteresis to the MAX931/MAX932/MAX933, connect resistor R1 between REF and HYST, and connect resistor R2 between HYST and V- (Figure 3). If no hysteresis is required, connect HYST to REF. When hysteresis is added, the upper threshold increases by the same amount that the lower threshold decreases. The hysteresis band (the difference between the upper and lower thresholds, V_{HB}) is approximately equal to twice the voltage between REF and HYST. The HYST input can be adjusted to a maximum voltage of REF and to a minimum voltage of (REF - 50mV). The

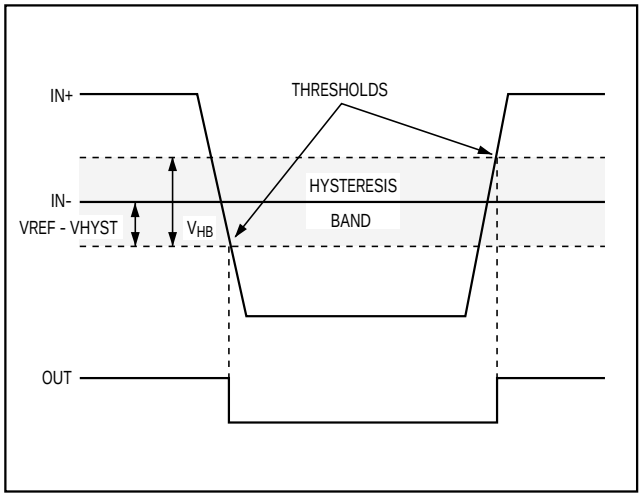

Figure 2. Threshold Hysteresis Band

Ultra Low-Power, Low-Cost Comparators with 2% Reference

maximum difference between REF and HYST (50mV) will therefore produce a 100mV max hysteresis band. Use the following equations to determine R1 and R2:

$$R1 = \frac{V_{HB}}{(2 \times I_{REF})}$$

$$R2 = \frac{\left(1.182 - \frac{V_{HB}}{2}\right)}{I_{REF}}$$

Where I_{REF} (the current sourced by the reference) should not exceed the REF source capability, and should be significantly larger than the HYST input current. I_{REF} values between 0.1µA and 4µA are usually appropriate. If 2.4MΩ is chosen for R2 (I_{REF} = 0.5µA), the equation for R1 and V_{HB} can be approximated as:

$$R1\ (k\Omega) = V_{HB}(mV)$$

When hysteresis is obtained in this manner for the MAX932/MAX933, the same hysteresis applies to both comparators.

Hysteresis (MAX934)

Hysteresis can be set with two resistors using positive feedback, as shown in Figure 4. This circuit generally draws more current than the circuits using the HYST pin on the MAX931/MAX932/MAX933, and the high feedback impedance slows hysteresis. The design procedure is as follows:

1. Choose R3. The leakage current of IN+ is under 1nA (up to +85°C), so the current through R3 can be around 100nA and still maintain good accuracy. The current through R3 at the trip point is V_{REF}/R3, or 100nA for R3 = 11.8MΩ. 10MΩ is a good practical value.
2. Choose the hysteresis voltage (V_{HB}), the voltage between the upper and lower thresholds. In this example, choose V_{HB} = 50mV.
3. Calculate R1.

$$R1 = R3 \times \frac{V_{HB}}{V+}$$

$$= 10M \times \frac{0.05}{5}$$

$$= 100k\Omega$$

4. Choose the threshold voltage for V_{IN} rising (V_{THR}). In this example, choose V_{THR} = 3V.
5. Calculate R2.

$$R2 = \frac{1}{\left[\left(\frac{V_{THR}}{(V_{REF} \times R1)}\right) - \frac{1}{R1} - \frac{1}{R3}\right]}$$

$$= \frac{1}{\left[\left(\frac{3}{(1.182 \times 100k)}\right) - \frac{1}{100k} - \frac{1}{10M}\right]}$$

$$= 65.44k\Omega$$

A 1% preferred value is 64.9kΩ.

6. Verify the threshold voltages with these formulas:

V_{IN} rising:

$$V_{THR} = V_{REF} \times R1 \times \left(\frac{1}{R1} + \frac{1}{R2} + \frac{1}{R3}\right)$$

V_{IN} falling:

$$V_{THF} = V_{THR} - \frac{(R1 \times V+)}{R3}$$

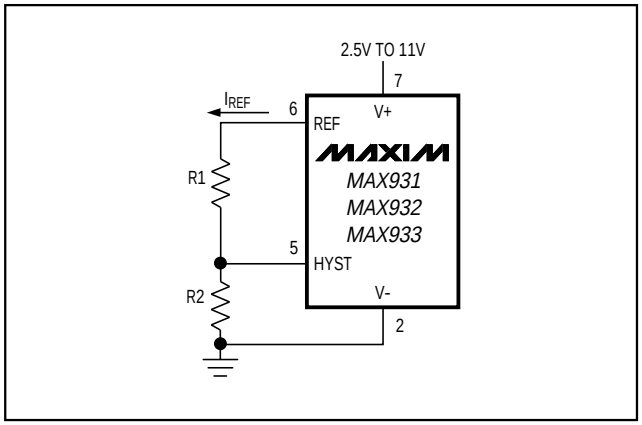

Figure 3. Programming the HYST Pin

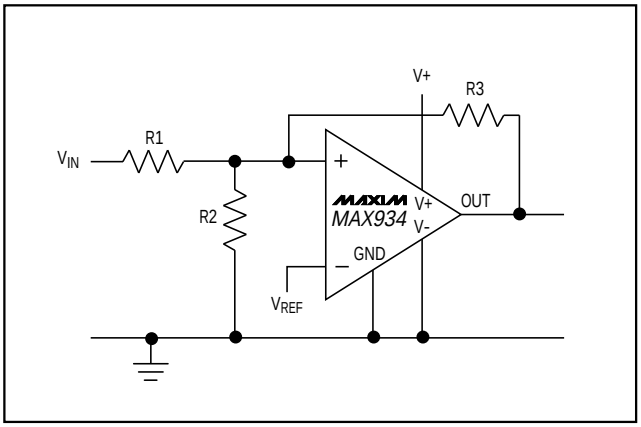

Figure 4. External Hysteresis

Board Layout and Bypassing

Power-supply bypass capacitors are not needed if the supply impedance is low, but 100nF bypass capacitors should be used when the supply impedance is high or when the supply leads are long. Minimize signal lead lengths to reduce stray capacitance between the input and output that might cause instability. Do not bypass the reference output.

Typical Applications

Auto-Off Power Source

Figure 5 shows the schematic for a 40mA power supply that has a timed auto power-off function. The comparator output is the switched power-supply output. With a 10mA load, it typically provides a voltage of (V_{BATT} - 0.12V), but draws only 3.5µA quiescent current. This circuit takes advantage of the four key features of the MAX931: 2.5µA supply current, an internal reference, hysteresis, and high current output. Using the component values shown, the three-resistor voltage divider programs the maximum ±50mV of hysteresis and sets the IN- voltage at 100mV. This gives an IN+ trip threshold of approximately 50mV for IN+ falling.

The RC time constant determines the maximum power-on time of the OUT pin before power-down occurs. This period can be approximated by:

R x C x 4.6sec

For example: 2MΩ x 10µF x 4.6 = 92sec. The actual time will vary with both the leakage current of the capacitor and the voltage applied to the circuit.

Window Detector

The MAX933 is ideal for making window detectors (undervoltage/overvoltage detectors). The schematic is shown in Figure 6, with component values selected for an 4.5V undervoltage threshold, and a 5.5V overvoltage threshold. Choose different thresholds by changing the values of R1, R2, and R3. To prevent chatter at the output when the supply voltage is close to a threshold, hysteresis has been added using R4 and R5. OUTA provides an active-low undervoltage indication, and OUTB gives an active-low overvoltage indication. ANDing the two outputs provides an active-high, power-good signal.

The design procedure is as follows:

1. Choose the required hysteresis level and calculate values for R4 and R5 according to the formulas in the *Hysteresis (MAX931/MAX932/MAX933)* section. In this example, ±5mV of hysteresis has been added *at the comparator input* ($V_H = V_{HB}/2$). This means that the hysteresis apparent at V_{IN} will be larger because of the input resistor divider.
2. Select R1. The leakage current into INB- is normally under 1nA, so the current through R1 should exceed

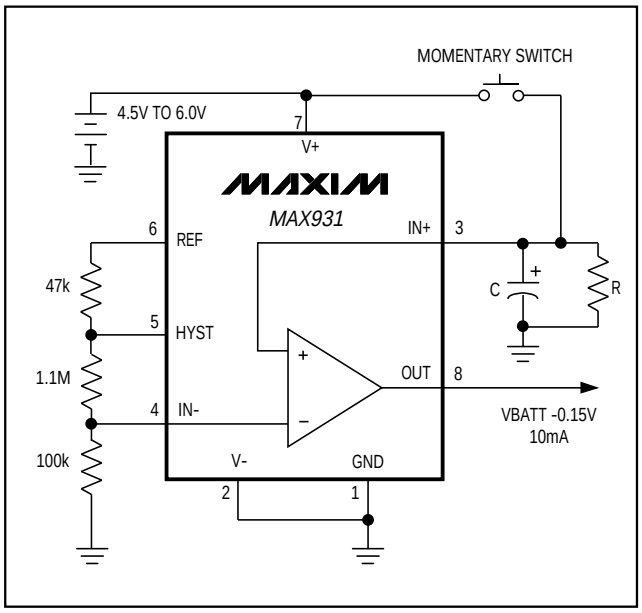

Figure 5. Auto-off power switch operates on 2.5µA quiescent current.

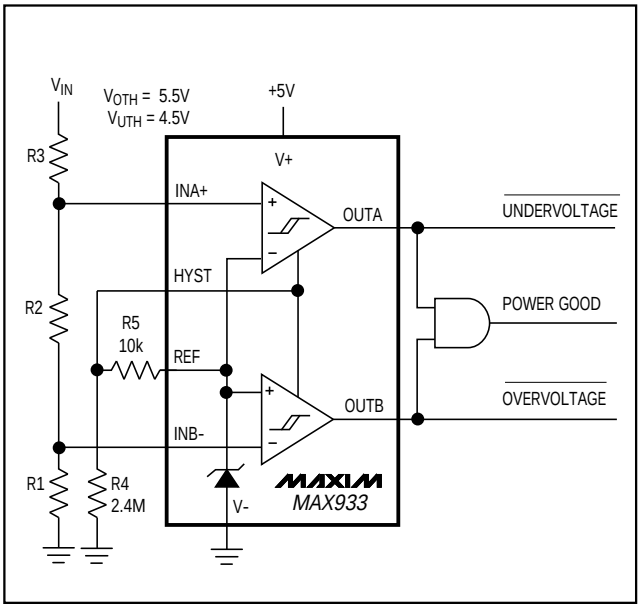

Figure 6. Window Detector

Ultra Low-Power, Low-Cost Comparators with 2% Reference

100nA for the thresholds to be accurate. R1 values up to about 10MΩ can be used, but values in the 100kΩ to 1MΩ range are usually easier to deal with. In this example, choose R1 = 294kΩ.

3. Calculate R2 + R3. The overvoltage threshold should be 5.5V when V_{IN} is rising. The design equation is as follows:

$$R2 + R3 = R1 \times \left(\frac{V_{OTH}}{V_{REF} + V_H} - 1 \right)$$

$$= 294k \times \left(\frac{5.5}{(1.182 + 0.005)} - 1 \right)$$

$$= 1.068M\Omega$$

4. Calculate R2. The undervoltage threshold should be 4.5V when V_{IN} is falling. The design equation is as follows:

$$R2 = (R1 + R2 + R3) \times \frac{(V_{REF} - V_H)}{V_{UTH}} - R1$$

$$= (294k + 1.068M) \times \frac{(1.182 - 0.005)}{4.5} - 294k$$

$$= 62.2k\Omega$$

Choose R2 = 61.9kΩ (1% standard value).

5. Calculate R3.

$$R3 = (R2 + R3) - R2$$

$$= 1.068M - 61.9k$$

$$= 1.006M\Omega$$

Choose R3 = 1MΩ (1% standard value).

6. Verify the resistor values. The equations are as follows, evaluated for the above example.

Overvoltage threshold:

$$V_{OTH} = (V_{REF} + V_H) \times \frac{(R1 + R2 + R3)}{R1}$$

$$= 5.474V.$$

Undervoltage threshold:

$$V_{UTH} = (V_{REF} - V_H) \times \frac{(R1 + R2 + R3)}{(R1 + R2)}$$

$$= 4.484V,$$

where the hysteresis voltage $V_H = V_{REF} \times \frac{R5}{R4}$.

Bar-Graph Level Gauge

The high output source capability of the MAX931 series is useful for driving LEDs. An example of this is the simple four-stage level detector shown in Figure 7. The full-scale threshold (all LEDs on) is given by V_{IN} = (R1 + R2)/R1 volts. The other thresholds are at 3/4 full scale, 1/2 full scale, and 1/4 full scale. The output resistors limit the current into the LEDs.

Level Shifter

Figure 8 shows a circuit to shift from bipolar ±5V inputs to TTL signals. The 10kΩ resistors protect the comparator inputs, and do not materially affect the operation of the circuit.

Two-Stage Low-Voltage Detector

Figure 9 shows the MAX932 monitoring an input voltage in two steps. When V_{IN} is higher than the LOW and FAIL thresholds, outputs are high. Threshold calculations are similar to those for the window-detector application.

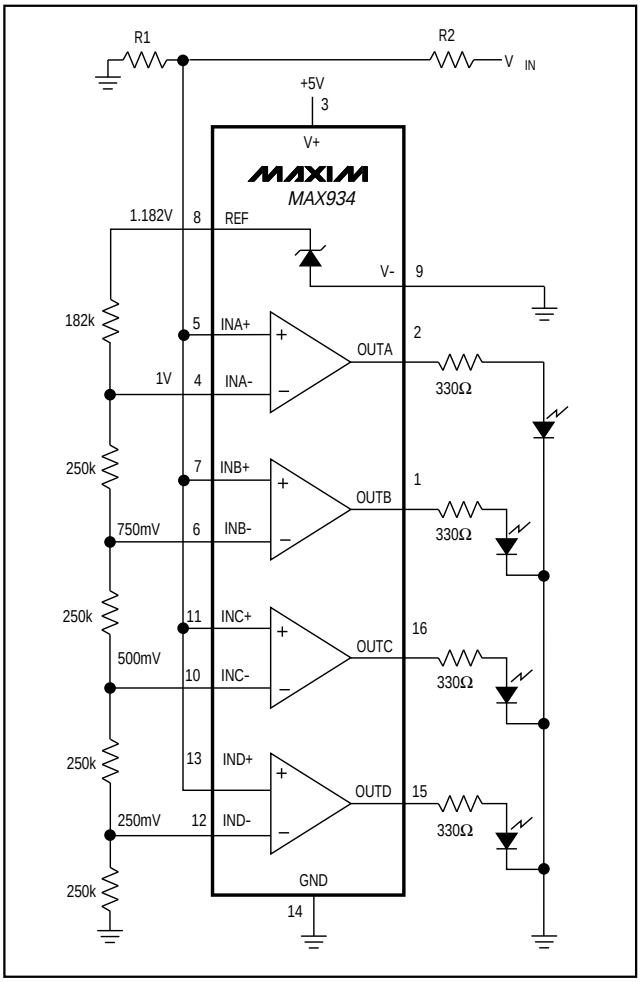

Figure 7. Bar-Graph Level Gauge

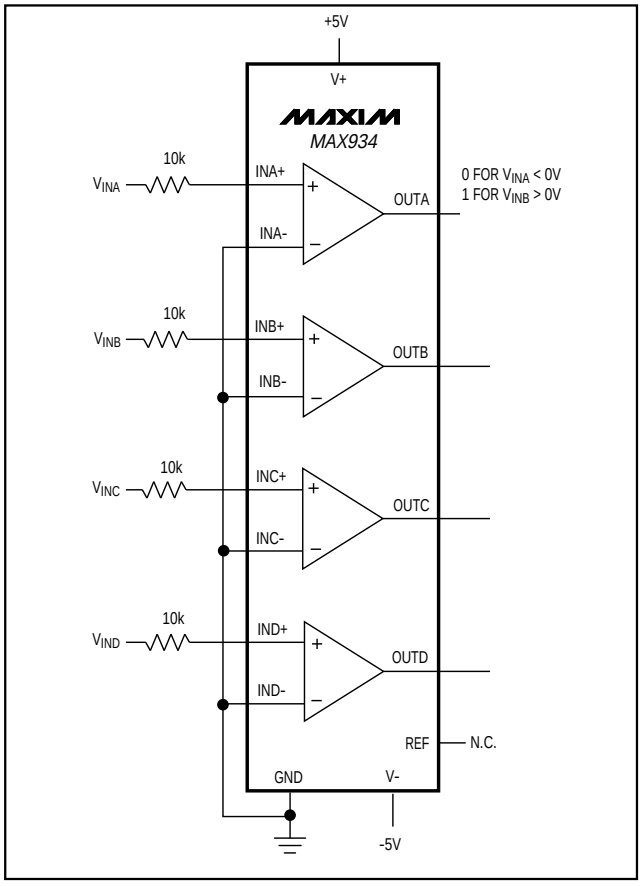

Figure 8. Level Shifter: ±5V Input to CMOS Output

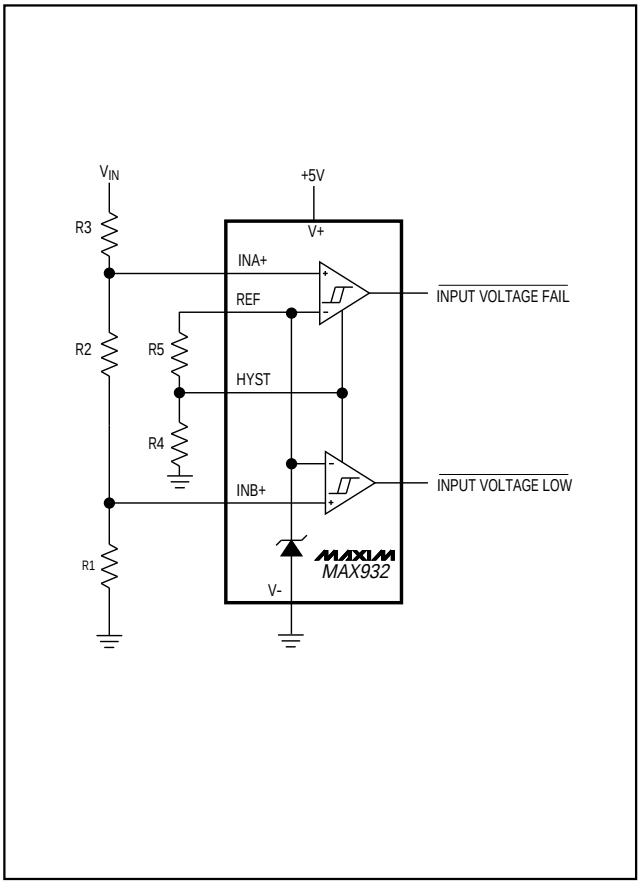

Figure 9. Two-Stage Low-Voltage Detector

Ultra Low-Power, Low-Cost Comparators with 2% Reference

Pin Configurations

TOP VIEW

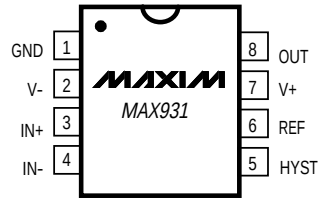

DIP/SO/μMAX

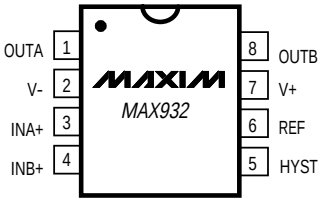

DIP/SO/μMAX

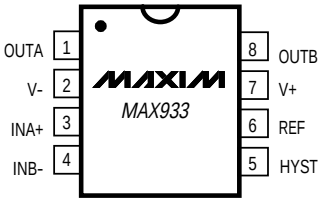

DIP/SO/μMAX

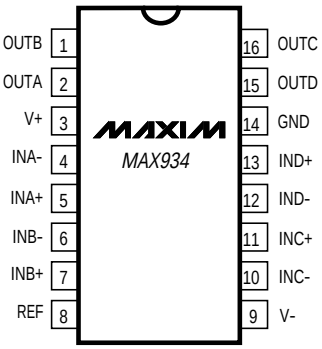

DIP/Narrow SO

Ordering Information (continued)

PART	TEMP. RANGE	PIN-PACKAGE
MAX932CPA	0°C to +70°C	8 Plastic DIP
MAX932CSA	0°C to +70°C	8 SO
MAX932CUA	0°C to +70°C	8 μMAX
MAX932EPA	-40°C to +85°C	8 Plastic DIP
MAX932ESA	-40°C to +85°C	8 SO
MAX933CPA	0°C to +70°C	8 Plastic DIP
MAX933CSA	0°C to +70°C	8 SO
MAX933CUA	0°C to +70°C	8 μMAX
MAX933EPA	-40°C to +85°C	8 Plastic DIP
MAX933ESA	-40°C to +85°C	8 SO
MAX934CPE	0°C to +70°C	16 Plastic DIP
MAX934CSE	0°C to +70°C	16 Narrow SO
MAX934EPE	-40°C to +85°C	16 Plastic DIP
MAX934ESE	-40°C to +85°C	16 Narrow SO

For similar devices guaranteed over the military temp. range, see the MAX921-MAX924 data sheet. The MAX931, MAX933, and MAX934 are pin-compatible with the 1% accurate MAX921, MAX923, and MAX924, respectively. The MAX932 and MAX922 are not pin-compatible.

Package Information

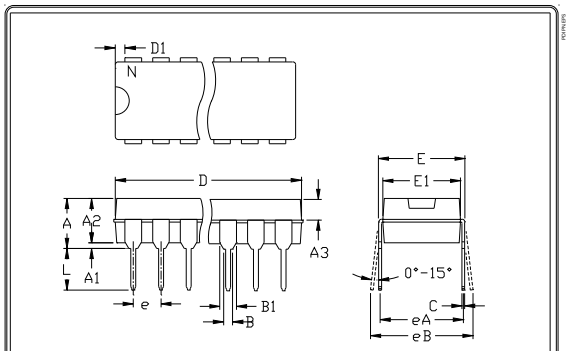

	INCHES		MILLIMETERS	
	MIN	MAX	MIN	MAX
A	---	0.200	---	5.08
A1	0.015	---	0.38	---
A2	0.125	0.175	3.18	4.45
A3	0.055	0.080	1.40	2.03
B	0.016	0.022	0.41	0.56
B1	0.045	0.065	1.14	1.65
C	0.008	0.012	0.20	0.30
D1	0.005	0.080	0.13	2.03
E	0.300	0.325	7.62	8.26
E1	0.240	0.310	6.10	7.87
e	0.100	---	2.54	---
eA	0.300	---	7.62	---
eB	---	0.400	---	10.16
L	0.115	0.150	2.92	3.81

	INCHES		MILLIMETERS			
	MIN	MAX	MIN	MAX	N	MS001
D	0.348	0.390	8.84	9.91	8	AB
D	0.735	0.765	18.67	19.43	14	AC
D	0.745	0.765	18.92	19.43	16	AA
D	0.885	0.915	22.48	23.24	18	AD
D	1.015	1.045	25.78	26.54	20	AE
D	1.14	1.265	28.96	32.13	24	AF
D	1.360	1.380	34.54	35.05	28	*5

NOTES:
1. D&E DO NOT INCLUDE MOLD FLASH
2. MOLD FLASH OR PROTRUSIONS NOT TO EXCEED .15mm (.006")
3. CONTROLLING DIMENSION: MILLIMETER
4. MEETS JEDEC MS001-XX AS SHOWN IN ABOVE TABLE
5. SIMILIAR TO JEDEC MO-058AB
6. N = NUMBER OF PINS

MAXIM | PACKAGE FAMILY OUTLINE: PDIP .300" | 1/1 | 21-0043 A

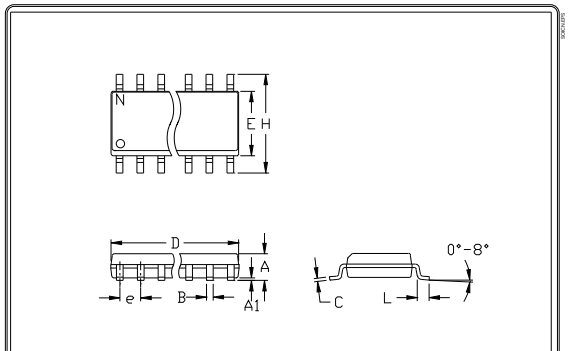

	INCHES		MILLIMETERS	
	MIN	MAX	MIN	MAX
A	0.053	0.069	1.35	1.75
A1	0.004	0.010	0.10	0.25
B	0.014	0.019	0.35	0.49
C	0.007	0.010	0.19	0.25
e	0.050		1.27	
E	0.150	0.157	3.80	4.00
H	0.228	0.244	5.80	6.20
h	0.010	0.020	0.25	0.50
L	0.016	0.050	0.40	1.27

	INCHES		MILLIMETERS			
	MIN	MAX	MIN	MAX	N	MS012
D	0.189	0.197	4.80	5.00	8	A
D	0.337	0.344	8.55	8.75	14	B
D	0.386	0.394	9.80	10.00	16	C

NOTES:
1. D&E DO NOT INCLUDE MOLD FLASH
2. MOLD FLASH OR PROTRUSIONS NOT TO EXCEED .15mm (.006")
3. LEADS TO BE COPLANAR WITHIN .102mm (.004")
4. CONTROLLING DIMENSION: MILLIMETER
5. MEETS JEDEC MS012-XX AS SHOWN IN ABOVE TABLE
6. N = NUMBER OF PINS

MAXIM | PACKAGE FAMILY OUTLINE: SOIC .150" | 1/1 | 21-0041 A

Ultra Low-Power, Low-Cost Comparators with 2% Reference

Package Information (continued)

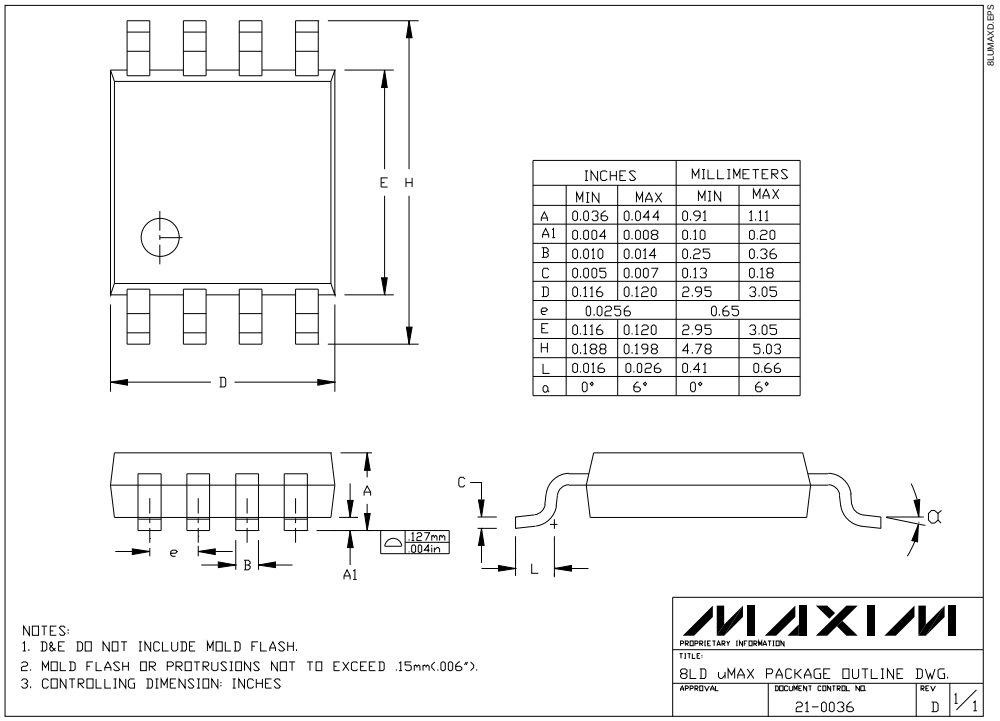

	INCHES		MILLIMETERS	
	MIN	MAX	MIN	MAX
A	0.036	0.044	0.91	1.11
A1	0.004	0.008	0.10	0.20
B	0.010	0.014	0.25	0.36
C	0.005	0.007	0.13	0.18
D	0.116	0.120	2.95	3.05
e	0.0256		0.65	
E	0.116	0.120	2.95	3.05
H	0.188	0.198	4.78	5.03
L	0.016	0.026	0.41	0.66
α	0°	6°	0°	6°

NOTES:
1. D&E DO NOT INCLUDE MOLD FLASH.
2. MOLD FLASH OR PROTRUSIONS NOT TO EXCEED .15mm(.006").
3. CONTROLLING DIMENSION: INCHES

MAXIM
PROPRIETARY INFORMATION
TITLE:
8LD μMAX PACKAGE OUTLINE DWG.
APPROVAL | DOCUMENT CONTROL NO. 21-0036 | REV D | 1/1

Maxim cannot assume responsibility for use of any circuitry other than circuitry entirely embodied in a Maxim product. No circuit patent licenses are implied. Maxim reserves the right to change the circuitry and specifications without notice at any time.

© 1997 Maxim Integrated Products Printed USA MAXIM is a registered trademark of Maxim Integrated Products.