19-3963; Rev 1; 7/09

EVALUATION KIT AVAILABLE

60mW, DirectDrive, Stereo Headphone Amplifiers with Shutdown

General Description

The MAX9728A/MAX9728B stereo headphone amplifiers are designed for display and notebook applications or portable equipment where board space is at a premium. These devices use a unique DirectDrive® architecture to produce a ground-referenced output from a single supply, eliminating the need for large DC-blocking capacitors, saving cost, board space, and component height. The MAX9728A offers an externally adjustable gain, while the MAX9728B has an internally preset gain of -1.5V/V. The MAX9728A/MAX9728B deliver up to 60mW per channel into a 32Ω load and have low 0.02% THD+N. An 80dB at 1kHz power-supply rejection ratio (PSRR) allows these devices to operate from noisy digital supplies without an additional linear regulator. Comprehensive click-and-pop circuitry suppresses audible clicks and pops on startup and shutdown.

The MAX9728A/MAX9728B operate from a single 4.5V to 5.5V supply, consume only 3.5mA of supply current, feature short-circuit and thermal-overload protection, and are specified over the extended -40°C to +85°C temperature range. The devices are available in tiny 12-pin Thin QFN (3mm x 3mm x 0.8mm) and 14-pin TSSOP packages (5mm x 4.4mm x 1.1mm).

Applications

Notebook PCs
DVD Players
LCD/PDP Displays
CRT TVs
Multimedia Monitors

DirectDrive is a registered trademark of Maxim Integrated Product, Inc.

Features

- **No Bulky DC-Blocking Capacitors Required**
- **Low-Power Shutdown Mode, < 0.1µA**
- **Adjustable Gain (MAX9728A) or Fixed -1.5V/V Gain (MAX9728B)**
- **Low 0.02% THD+N**
- **High PSRR (80dB at 1kHz) Eliminates LDO**
- **Integrated Click-and-Pop Suppression**
- **4.5V to 5.5V Single-Supply Operation**
- **Low Quiescent Current (3.5mA)**
- **Available in Space-Saving Packages**
  12-Pin Thin QFN (3mm x 3mm x 0.8mm)
  14-Pin TSSOP (5mm x 4.4mm x 1.1mm)

Ordering Information

PART	GAIN (V/V)	PIN-PACKAGE	TOP MARK
MAX9728AETC+	Adj.	12 TQFN-EP*	ABC
MAX9728AEUD+	Adj.	14 TSSOP	—
MAX9728BETC+	-1.5	12 TQFN-EP*	ABD
MAX9728BEUD+	-1.5	14 TSSOP	—

Note: *All devices specified over the -40°C to +85°C operating range.*

+Denotes lead(Pb)-free/RoHS-compliant package.

**EP = Exposed pad.*

Pin Configurations appear at end of data sheet.

Block Diagrams

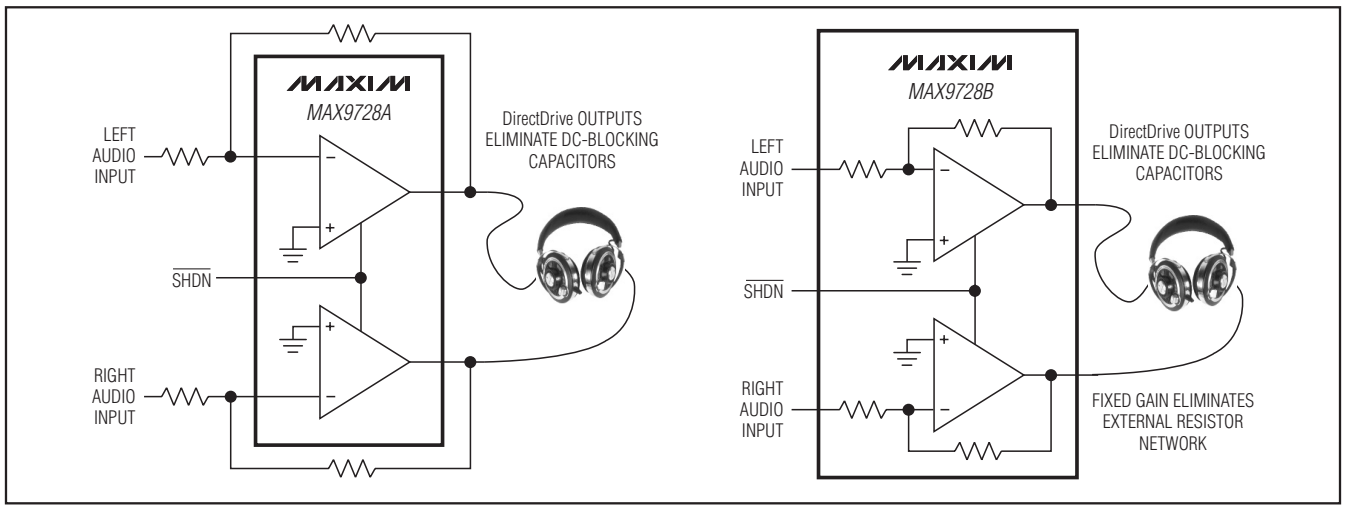

For pricing, delivery, and ordering information, please contact Maxim Direct at 1-888-629-4642, or visit Maxim's website at www.maxim-ic.com.

60mW, DirectDrive, Stereo Headphone Amplifiers with Shutdown

ABSOLUTE MAXIMUM RATINGS

V_{DD} to PGND .....-0.3V to +6V
PV_{SS} to SV_{SS} .....-0.3V to +0.3V
PGND to SGND .....-0.3V to +0.3V
C1P to PGND.....-0.3V to (V_{DD} + 0.3V)
C1N to PGND.....(PV_{SS} - 0.3V) to +0.3V
PV_{SS} and SV_{SS} to PGND.....-6V to +0.3V
IN_ to SGND (MAX9728A).....-0.3V to (V_{DD} + 0.3V)
IN_ to SGND (MAX9728B).....(SV_{SS} - 0.3V) to (V_{DD} + 0.3V)
OUT_ to SV_{SS} (Note 1) ....-0.3V to Min (V_{DD} - SV_{SS} + 0.3V, +9V)
OUT_ to V_{DD} (Note 2) .....+0.3V to Max (SV_{SS} - V_{DD} - 0.3V, -9V)
$\overline{SHDN}$ to _GND.....-0.3V to +6V
OUT_ Short Circuit to SGND .....Continuous
Short Circuit between OUTL and OUTR .....Continuous
Continuous Input Current into PV_{SS}.....260mA
Continuous Input Current (any other pin).....±20mA
Continuous Power Dissipation (T_A = +70°C)
12-Pin TQFN (derate 14.7mW/°C above +70°C) 1177mW
14-Pin TSSOP (derate 9.1mW/°C above +70°C) 727mW
Operating Temperature Range .....-40°C to +85°C
Storage Temperature Range .....-65°C to +150°C
Junction Temperature.....+150°C
Lead Temperature (soldering, 10s) .....+300°C

Note 1: OUTR and OUTL should be limited to no more than 9V above SV_{SS}, or above V_{DD} + 0.3V, whichever limits first.
Note 2: OUTR and OUTL should be limited to no more than 9V below V_{DD}, or below SV_{SS} - 0.3V, whichever limits first.

Stresses beyond those listed under "Absolute Maximum Ratings" may cause permanent damage to the device. These are stress ratings only, and functional operation of the device at these or any other conditions beyond those indicated in the operational sections of the specifications is not implied. Exposure to absolute maximum rating conditions for extended periods may affect device reliability.

ELECTRICAL CHARACTERISTICS

(V_{DD} = 5V, PGND = SGND, $\overline{SHDN}$ = 5V, C1 = C2 = 1µF, R_L = ∞, resistive load reference to ground; for MAX9728A gain = -1.5V/V (R_{IN} = 20kΩ, R_F = 30kΩ); for MAX9728B gain = -1.5V/V (internally set), T_A = -40°C to +85°C, unless otherwise noted. Typical values are at T_A = +25°C, unless otherwise noted.) (Note 3)

PARAMETER	SYMBOL	CONDITIONS	MIN	TYP	MAX	UNITS
GENERAL						
Supply Voltage Range	V_{DD}		4.5		5.5	V
Quiescent Current	I_{CC}			3.5	5.5	mA
Shutdown Current	I_{SHDN}	$\overline{SHDN}$ = SGND = PGND		< 0.1	1	µA
Shutdown to Full Operation	t_{SON}			180		µs
Input Impedance	R_{IN}	MAX9728B, measured at IN_	15	19	25	kΩ
Output Offset Voltage	V_{OS}			±1.5	±10	mV
Power-Supply Rejection Ratio	PSRR	V_{DD} = 4.5V to 5.5V		86		dB
		f = 1kHz, 100mV_{P-P}		80		
		f = 20kHz, 100mV_{P-P}		65		
Output Power	P_{OUT}	R_L = 32Ω, THD+N = 1%	30	63		mW
		R_L = 16Ω, THD+N = 1%		42		
Voltage Gain	A_V	MAX9728B (Note 4)	-1.52	-1.5	-1.48	V/V
Channel-to-Channel Gain Tracking		MAX9728B		±0.15		%
Total Harmonic Distortion Plus Noise	THD+N	R_L = 1kΩ, V_{OUT} = 2V_{RMS}, f_{IN} = 1kHz		0.003		%
		R_L = 32Ω, P_{OUT} = 50mW, f_{IN} = 1kHz		0.02		
		R_L = 16Ω, P_{OUT} = 35mW, f_{IN} = 1kHz		0.04		

ELECTRICAL CHARACTERISTICS (continued)

(V_{DD} = 5V, PGND = SGND, $\overline{SHDN}$ = 5V, C1 = C2 = 1µF, R_L = ∞, resistive load reference to ground; for MAX9728A gain = -1.5V/V (R_{IN} = 20kΩ, R_F = 30kΩ); for MAX9728B gain = -1.5V/V (internally set), T_A = -40°C to +85°C, unless otherwise noted. Typical values are at T_A = +25°C, unless otherwise noted.) (Note 3)

PARAMETER	SYMBOL	CONDITIONS		MIN	TYP	MAX	UNITS
Signal-to-Noise Ratio	SNR	R_L = 1kΩ, V_{OUT} = $2V_{RMS}$	BW = 22Hz to 22kHz		102		dB
			A-weighted		105		
		R_L = 32Ω, P_{OUT} = 50mW	BW = 22Hz to 22kHz		98		
			A-weighted		101		
Slew Rate	SR				0.5		V/µs
Capacitive Drive	C_L	No sustained oscillations			100		pF
Crosstalk		L to R, R to L, f = 10kHz, R_L = 16Ω, P_{OUT} = 15mW			-70		dB
Charge-Pump Oscillator Frequency	f_{OSC}			190	270	400	kHz
Click-and-Pop Level	K_{CP}	R_L = 32Ω, peak voltage, A-weighted, 32 samples per second (Note 5)	Into shutdown		-67		dB
			Out of shutdown		-64		
DIGITAL INPUTS ($\overline{SHDN}$)							
Input Voltage High	V_{INH}			2			V
Input Voltage Low	V_{INL}					0.8	V
Input Leakage Current						±1	µA

Note 3: All specifications are 100% tested at T_A = +25°C; temperature limits are guaranteed by design.

Note 4: Gain for the MAX9728A is adjustable.

Note 5: Test performed with a 32Ω resistive load connected to SGND. Mode transitions are controlled by $\overline{SHDN}$. K_{CP} level is calculated as 20log[(peak voltage during mode transition, no input signal)/(peak voltage under normal operation at rated power level)]. Units are expressed in dB.

60mW, DirectDrive, Stereo Headphone Amplifiers with Shutdown

Typical Operating Characteristics

(V_{DD} = 5V, PGND = SGND = 0V, $\overline{SHDN}$ = V_{DD}, C1 = C2 = 1µF, R_L = ∞, gain = -1.5V/V (R_{IN} = 20kΩ, R_F = 30kΩ for the MAX9728A), THD+N measurement bandwidth = 22Hz to 22kHz, both outputs driven in phase, T_A = +25°C, unless otherwise noted.)

TOTAL HARMONIC DISTORTION PLUS NOISE vs. OUTPUT POWER

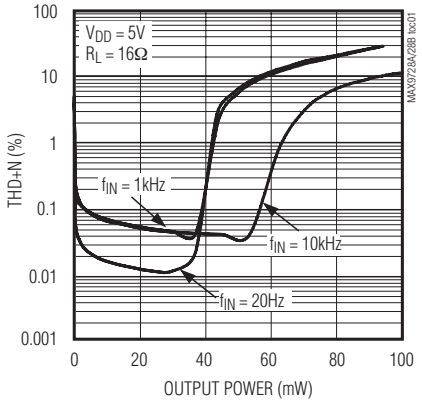

TOTAL HARMONIC DISTORTION PLUS NOISE vs. OUTPUT POWER

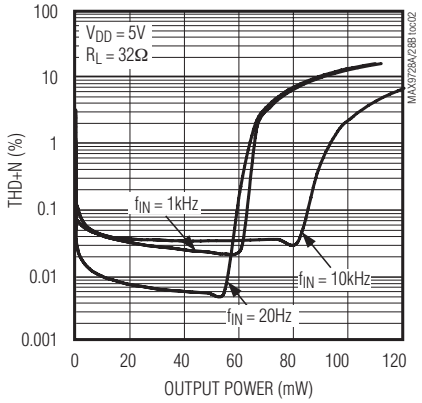

TOTAL HARMONIC DISTORTION PLUS NOISE vs. FREQUENCY

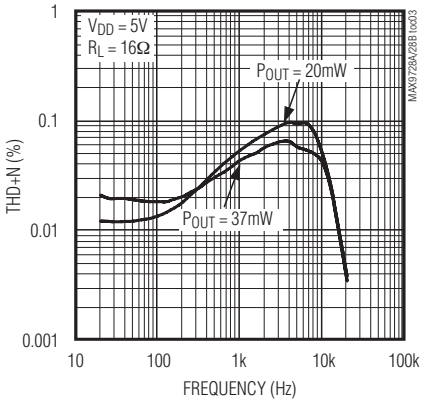

TOTAL HARMONIC DISTORTION PLUS NOISE vs. FREQUENCY

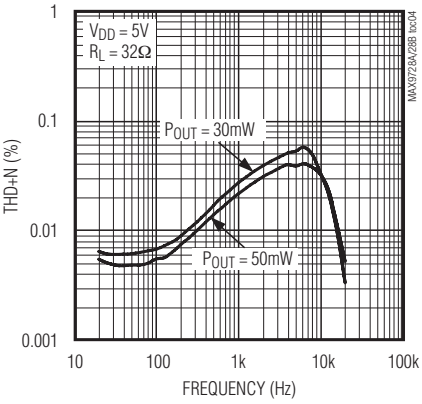

OUTPUT POWER vs. SUPPLY VOLTAGE

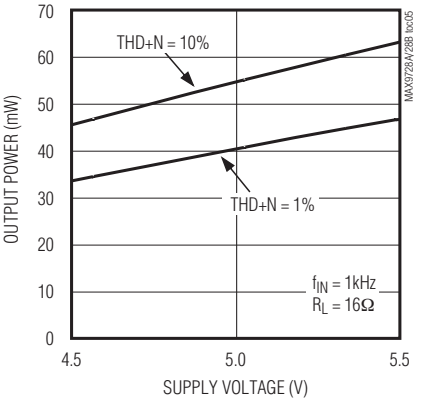

OUTPUT POWER vs. SUPPLY VOLTAGE

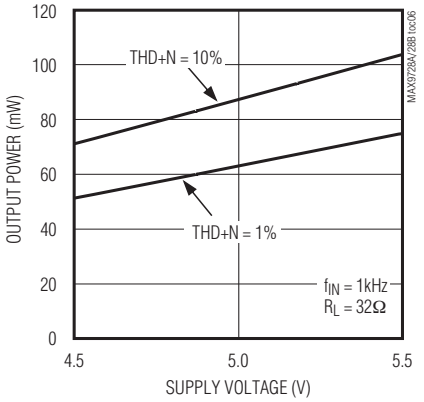

Typical Operating Characteristics (continued)

(V_{DD} = 5V, PGND = SGND = 0V, $\overline{SHDN}$ = V_{DD}, C1 = C2 = 1µF, R_L = ∞, gain = -1.5V/V (R_{IN} = 20kΩ, R_F = 30kΩ for the MAX9728A), THD+N measurement bandwidth = 22Hz to 22kHz, both outputs driven in phase, T_A = +25°C, unless otherwise noted.)

OUTPUT POWER vs. LOAD RESISTANCE

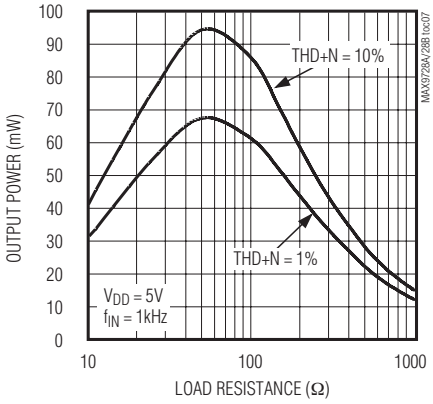

POWER-SUPPLY REJECTION RATIO vs. FREQUENCY

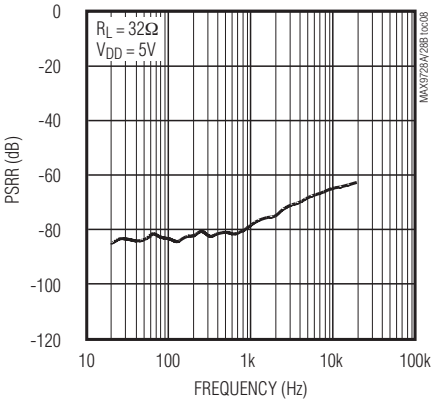

CROSSTALK vs. FREQUENCY

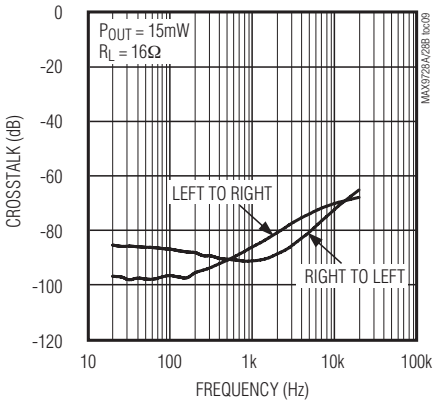

OUTPUT POWER vs. LOAD RESISTANCE AND CHARGE-PUMP CAPACITOR SIZE

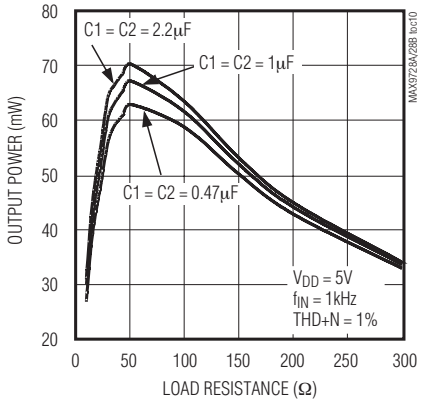

SUPPLY CURRENT vs. SUPPLY VOLTAGE

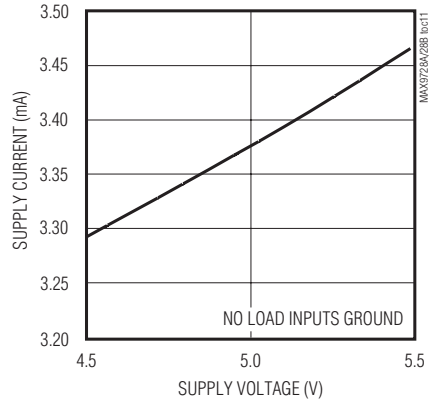

SHUTDOWN CURRENT vs. SUPPLY VOLTAGE

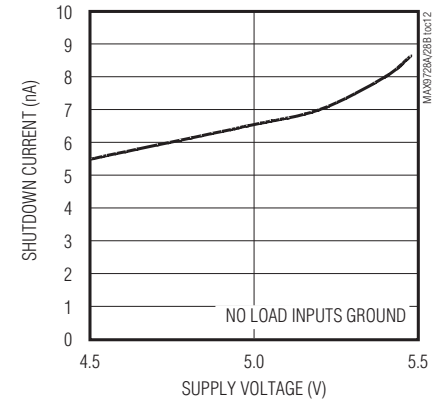

60mW, DirectDrive, Stereo Headphone Amplifiers with Shutdown

Typical Operating Characteristics (continued)

(V_{DD} = 5V, PGND = SGND = 0V, $\overline{SHDN}$ = V_{DD}, C1 = C2 = 1µF, R_L = ∞, gain = -1.5V/V (R_{IN} = 20kΩ, R_F = 30kΩ for the MAX9728A), THD+N measurement bandwidth = 22Hz to 22kHz, both outputs driven in phase, T_A = +25°C, unless otherwise noted.)

EXITING SHUTDOWN

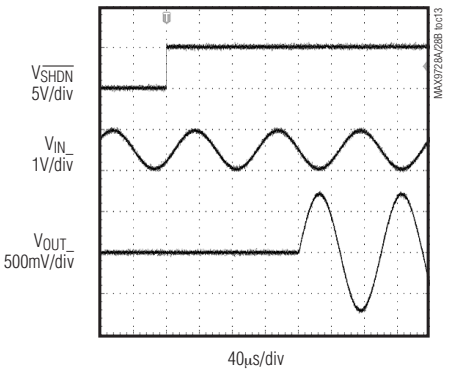

ENTERING SHUTDOWN

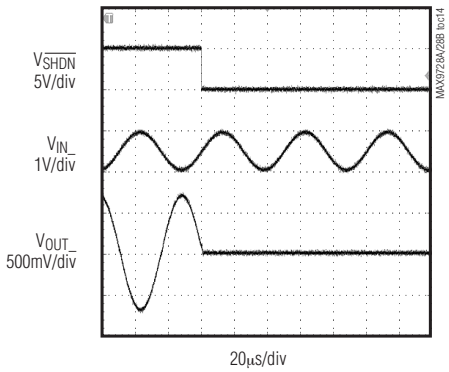

Pin Description

PIN		NAME	FUNCTION
TQFN	TSSOP		
1	3	C1P	Flying Capacitor Positive Terminal. Connect a 1µF ceramic capacitor from C1P to C1N.
2	4	PGND	Power Ground. Connect to SGND.
3	5	C1N	Flying Capacitor Negative Terminal. Connect a 1µF ceramic capacitor from C1P to C1N.
4	7	PV_{SS}	Charge-Pump Output. Connect to SV_{SS} and bypass with a 1µF ceramic capacitor to PGND.
5	8	$\overline{SHDN}$	Active-Low Shutdown Input
6	9	INL	Left-Channel Input
7	10	SGND	Signal Ground. Connect to PGND.
8	11	INR	Right-Channel Input
9	12	SV_{SS}	Amplifier Negative Supply. Connect to PV_{SS}.
10	14	OUTR	Right-Channel Output
11	1	OUTL	Left-Channel Output
12	2	V_{DD}	Positive Power-Supply Input. Bypass with a 1µF capacitor to PGND.
—	6,13	N.C.	No Connection. Not internally connected.
EP	—	EP	Exposed Paddle. **Leave this connection floating or connect it to SV_{SS}.**

Detailed Description

The MAX9728A/MAX9728B stereo headphone amplifiers feature Maxim's DirectDrive architecture, eliminating the large output-coupling capacitors required by conventional single-supply headphone amplifiers. These devices consist of two 60mW Class AB headphone amplifiers, undervoltage lockout (UVLO)/shutdown control, charge pump, and comprehensive click-and-pop suppression circuitry (see the *Functional Diagram/Typical Operating Circuits*). The charge pump inverts the positive supply (V_{DD}), creating a negative supply (PV_{SS}). The headphone amplifiers operate from these bipolar supplies with their outputs biased about SGND (Figure 1). The benefit of this SGND bias is that the amplifier outputs do not have a DC component. The large DC-blocking capacitors required with conventional headphone amplifiers are unnecessary, conserving board space, reducing system cost, and improving frequency response. The MAX9728A/MAX9728B feature an undervoltage lockout that prevents operation from an insufficient power supply and click-and-pop suppression that eliminates audible transients on startup and shutdown. The MAX9728A/MAX9728B also feature thermal-overload and short-circuit protection.

DirectDrive

Conventional single-supply headphone amplifiers have their outputs biased about a nominal DC voltage (typically half the supply) for maximum dynamic range. Large-coupling capacitors are needed to block this DC bias from the headphone. Without these capacitors, a significant amount of DC current flows to the headphone, resulting in unnecessary power dissipation and possible damage to both headphone and headphone amplifier.

Maxim's DirectDrive architecture uses a charge pump to create an internal negative supply voltage, allowing the MAX9728A/MAX9728B outputs to be biased about SGND. With no DC component, there is no need for the large DC-blocking capacitors. The MAX9728A/MAX9728B charge pumps require two small ceramic capacitors, conserving board space, reducing cost, and improving the frequency response of the headphone amplifier. See the Output Power vs. Load Resistance and Charge-Pump Capacitor Size graph in the *Typical Operating Characteristics* for details of the possible capacitor sizes. There is a low DC voltage on the amplifier outputs due to amplifier offset. However, the offsets of the MAX9728A/MAX9728B are typically 1.5mV, which, when combined with a 32Ω load, results in less than 47µA of DC current flow to the headphones.

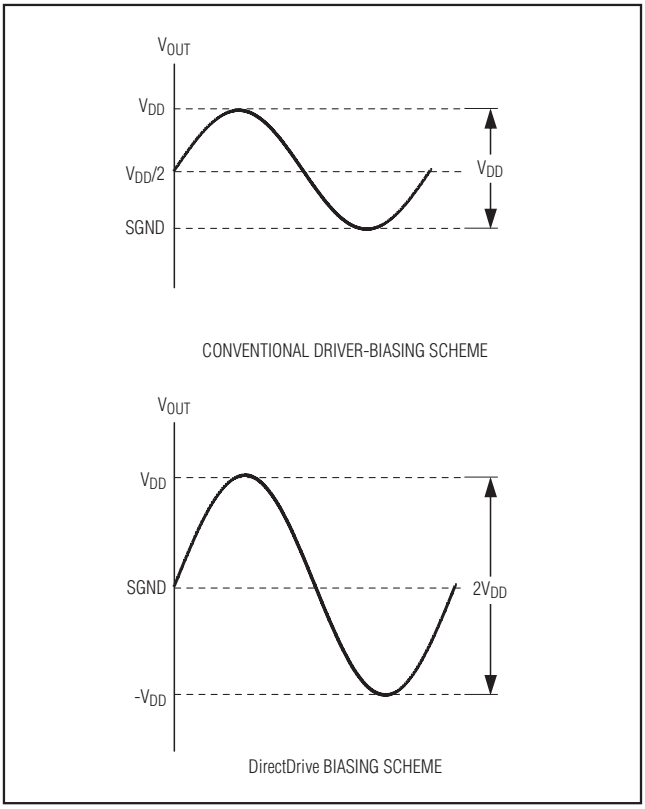

Figure 1. Conventional Driver Output Waveform vs. MAX9728A/MAX9728B Output Waveform

Charge Pump

The MAX9728A/MAX9728B feature a low-noise charge pump. The 270kHz switching frequency is well beyond the audio range and does not interfere with audio signals. The switch drivers feature a controlled switching speed that minimizes noise generated by turn-on and turn-off transients. The di/dt noise caused by the parasitic bond wire and trace inductance is minimized by limiting the switching speed of the charge pump. Although not typically required, additional high-frequency noise attenuation can be achieved by increasing the value of C2 (see the *Functional Diagram/Typical Operating Circuits*).

Click-and-Pop Suppression

In conventional single-supply audio amplifiers, the output-coupling capacitor contributes significantly to audible clicks and pops. Upon startup, the amplifier charges the coupling capacitor to its bias voltage, typically half the supply. Likewise, on shutdown, the capacitor is discharged. This results in a DC shift across the capacitor, which appears as an audible transient at the speaker.

60mW, DirectDrive, Stereo Headphone Amplifiers with Shutdown

Since the MAX9728A/MAX9728B do not require output-coupling capacitors, this problem does not arise. Additionally, the MAX9728A/MAX9728B feature extensive click-and-pop suppression that eliminates any audible transient sources internal to the device.

Typically, the output of the device driving the MAX9728A/MAX9728B has a DC bias of half the supply voltage. At startup, the input-coupling capacitor is charged to the preamplifier's DC-bias voltage through the input and feedback resistors of the MAX9728A/MAX9728B, resulting in a DC shift across the capacitor and an audible click/pop. Delay the rise of $\overline{SHDN}$ 4 to 5 time constants based on R_{IN} and C_{IN}, relative to the startup of the preamplifier, to eliminate clicks-and-pops caused by the input filter.

Shutdown

The MAX9728A/MAX9728B feature a < 0.1µA, low-power shutdown mode that reduces quiescent current consumption and extends battery life for portable applications. Drive $\overline{SHDN}$ low to disable the amplifiers and the charge pump. In shutdown mode, the amplifier output impedance is set to $14k\Omega||R_F$ (R_F is 30kΩ for the MAX9728B). The amplifiers and charge pump are enabled once $\overline{SHDN}$ is driven high.

Applications Information

Power Dissipation

Under normal operating conditions, linear power amplifiers can dissipate a significant amount of power. The maximum power dissipation for each package is given in the *Absolute Maximum Ratings* section under Continuous Power Dissipation or can be calculated by the following equation:

$$P_{DISSPKG(MAX)} = \frac{T_{J(MAX)} - T_A}{\theta_{JA}}$$

where $T_{J(MAX)}$ is +150°C, T_A is the ambient temperature, and θ_{JA} is the reciprocal of the derating factor in °C/W as specified in the *Absolute Maximum Ratings* section. For example, θ_{JA} of the Thin QFN package is +68°C/W, and +110°C/W for the TSSOP package.

The MAX9728A/MAX9728B have two power dissipation sources: a charge pump and the two output amplifiers. If power dissipation for a given application exceeds the maximum allowed for a particular package, reduce V_{DD}, increase load impedance, decrease the ambient temperature, or add heatsinking to the device. Large output, supply, and ground traces decrease θ_{JA}, allowing more heat to be transferred from the package to the surrounding air.

Thermal-overload protection limits total power dissipation in the MAX9728A/MAX9728B. When the junction temperature exceeds +150°C, the thermal-protection circuitry disables the amplifier output stage. The amplifiers are enabled once the junction temperature cools by approximately 12°C. This results in a pulsing output under continuous thermal-overload conditions.

Output Dynamic Range

Dynamic range is the difference between the noise floor of the system and the output level at 1% THD+N. Determine the system's dynamic range before setting the maximum output gain. Output clipping occurs if the output signal is greater than the dynamic range of the system. The DirectDrive architecture of the MAX9728A/MAX9728B has increased the dynamic range compared to other single-supply amplifiers.

Maximum Output Swing

Internal device structures limit the maximum voltage swing of the MAX9728A/MAX9728B. The output must not be driven such that the peak output voltage exceeds the opposite supply voltage by 9V. For example, if V_{DD} = 5V, the charge pump sets PV_{SS} = -5V. Therefore, the peak output swing must be less than ±4V to prevent exceeding the absolute maximum ratings.

Component Selection

Input-Coupling Capacitor

The input capacitor (C_{IN}), in conjunction with the input resistor (R_{IN}), forms a highpass filter that removes the DC bias from an incoming signal (see the *Functional Diagram/Typical Operating Circuits*). The AC-coupling capacitor allows the device to bias the signal to an optimum DC level. Assuming zero-source impedance, the -3dB point of the highpass filter is given by:

$$f_{-3dB} = \frac{1}{2\pi R_{IN} C_{IN}}$$

Choose the C_{IN} such that f_{-3dB} is well below the lowest frequency of interest. Setting f_{-3dB} too high affects the device's low-frequency response. Use capacitors whose dielectrics have low-voltage coefficients, such as tantalum or aluminum electrolytic. Capacitors with high-voltage coefficients, such as ceramics, can result in increased distortion at low frequencies.

Charge-Pump Capacitor Selection

Use ceramic capacitors with a low ESR for optimum performance. For optimal performance over the extended temperature range, select capacitors with an X7R dielectric. Table 1 lists suggested manufacturers.

Flying Capacitor (C1)

The value of the flying capacitor (see the *Functional Diagram/Typical Operating Circuits*) affects the charge pump's load regulation and output resistance. A C1 value that is too small degrades the device's ability to provide sufficient current drive, which leads to a loss of output voltage. Increasing the value of C1 improves load regulation and reduces the charge-pump output resistance to an extent. See the Output Power vs. Load Resistance and Charge-Pump Capacitor Size graph in the *Typical Operating Characteristics*. Above 1µF, the on-resistance of the switches and the ESR of C1 and C2 dominate.

Hold Capacitor (C2)

The hold capacitor value (see the *Functional Diagram/Typical Operating Circuits*) and ESR directly affect the ripple at PV_{SS}. Increasing the value of C2 reduces output ripple. Likewise, decreasing the ESR of C2 reduces both ripple and output resistance. Lower capacitance values can be used in systems with low maximum output power levels. See the Output Power vs. Load Resistance and Charge-Pump Capacitor Size graph in the *Typical Operating Characteristics*.

Power-Supply Bypass Capacitor (C3)

The power-supply bypass capacitor (see the *Functional Diagram/Typical Operating Circuits*) lowers the output impedance of the power supply, and reduces the impact of the MAX9728A/MAX9728Bs' charge-pump switching transients. Bypass V_{DD} with C3, the same value as C1, and place it physically close to the V_{DD} and PGND pins.

Amplifier Gain

The gain of the MAX9728B amplifier is internally set to -1.5V/V. All gain-setting resistors are integrated into the device, reducing external component count. The internally set gain, in combination with DirectDrive, results in a headphone amplifier that requires only five small capacitors to complete the amplifier circuit: two for the charge pump, two for audio input coupling, and one for power-supply bypassing (see the *Functional Diagram/Typical Operating Circuits*).

The gain of the MAX9728A amplifier is set externally as shown in Figure 2, the gain is:

$$A_V = -R_F/R_{IN}\ (V/V)$$

Choose feedback resistor values in the tens of kΩ range. Lower values may cause excessive power dissipation and require impractically small values of R_{IN} for large gain settings. The high-impedance state of the outputs can also be degraded during shutdown mode if an inadequate feedback resistor is used since the equivalent output impedance during shutdown is $14k\Omega \| R_F$ (R_F is equal to 30kΩ for the MAX9728B). The source resistance of the input device may also need to be taken into consideration. Since the effective value of R_{IN} is equal to the sum of the source resistance of the input device and the value of the input resistor connected to the inverting terminal of the headphone amplifier (20kΩ for the MAX9728B), the overall closed-loop gain of the headphone amplifier can be reduced if the input resistor is not significantly larger than the source resistance of the input device.

Table 1. Suggested Capacitor Manufacturers

SUPPLIER	PHONE	FAX	WEBSITE
Taiyo Yuden	800-348-2496	847-925-0899	www.t-yuden.com
TDK	847-803-6100	847-390-4405	www.component.tdk.com
Murata	770-436-1300	770-436-3030	www.murata.com

60mW, DirectDrive, Stereo Headphone Amplifiers with Shutdown

Lineout Amplifier and Filter Block

The MAX9728A can be used as an audio line driver capable of providing $2V_{RMS}$ into 10kΩ loads with a single 5V supply (see Figure 3 for the RMS Output Voltage vs. Supply Voltage plot). $2V_{RMS}$ is a popular audio line level, first used in CD players, but now common in DVD and set-top box (STB) interfacing standards. A $2V_{RMS}$ sinusoidal signal equates to approximately $5.7V_{P-P}$, which means that the audio system designer cannot simply run the lineout stage from a (typically common) 5V supply—the resulting output swing would be inadequate. A common solution to this problem is to use op amps driven from split supplies (±5V typically), or to use a high-voltage supply rail (9V to 12V). This can mean adding extra cost and complexity to the system power supply to meet this output level requirement. Having the ability to derive $2V_{RMS}$ from a 5V supply can often simplify power-supply design in some systems.

When the MAX9728A is used as a line driver to provide outputs that feed stereo equipment (receivers, STBs, notebooks, and desktops) with a digital-to-analog converter (DAC) used as an audio input source, it is often desirable to eliminate any high-frequency quantization noise produced by the DAC output before it reaches the load. This high-frequency noise can cause the input stages of the line-in equipment to exceed slew-rate limitations or create excessive EMI emissions on the cables between devices.

To suppress this noise, and to provide a $2V_{RMS}$ standard audio output level from a single 5V supply, the MAX9728A can be configured as a line driver and active lowpass filter. Figure 4 shows the MAX9728A connected as 2-pole Rauch/multiple feedback filter with a passband gain of 6dB and a -3dB (below passband) cutoff frequency of approximately 27kHz (see Figure 5 for the Gain vs. Frequency plot).

Layout and Grounding

Proper layout and grounding are essential for optimum performance. Connect PGND and SGND together at a single point on the PC board. Connect PV_{SS} to SV_{SS} and bypass with a 1µF capacitor. Place the power-supply bypass capacitor and the charge-pump hold capacitor as close to the MAX9728 as possible. Route PGND and all traces that carry switching transients away from SGND and the audio signal path. The thin QFN package features an exposed paddle that improves thermal efficiency. **Ensure that the exposed paddle is electrically isolated from PGND, SGND, and V_{DD}. Connect the exposed paddle to SV_{SS} only when the board layout dictates that the exposed paddle cannot be left floating.**

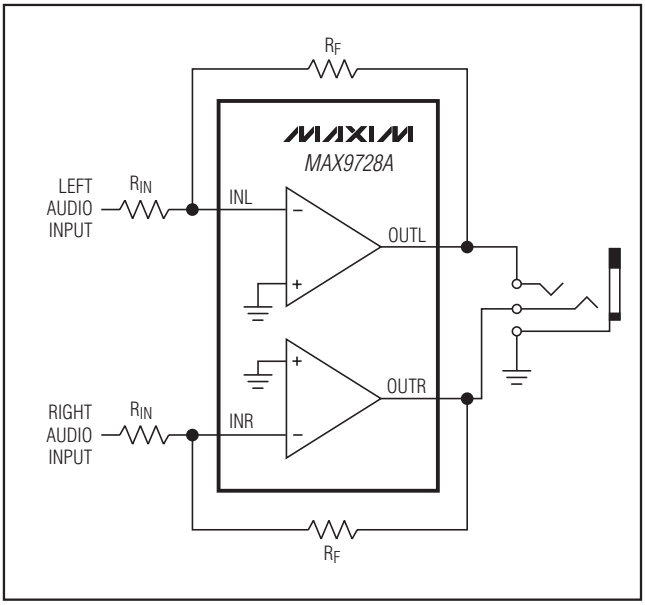

Figure 2. Gain Setting for the MAX9728A

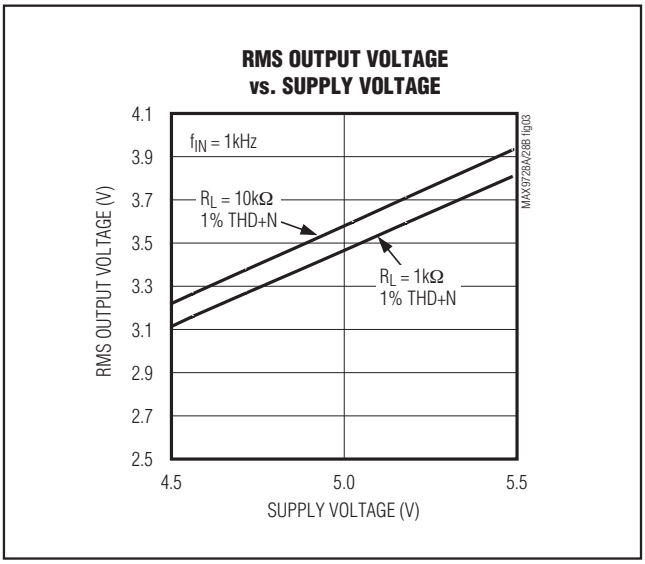

Figure 3. RMS Output Voltage vs. Supply Voltage

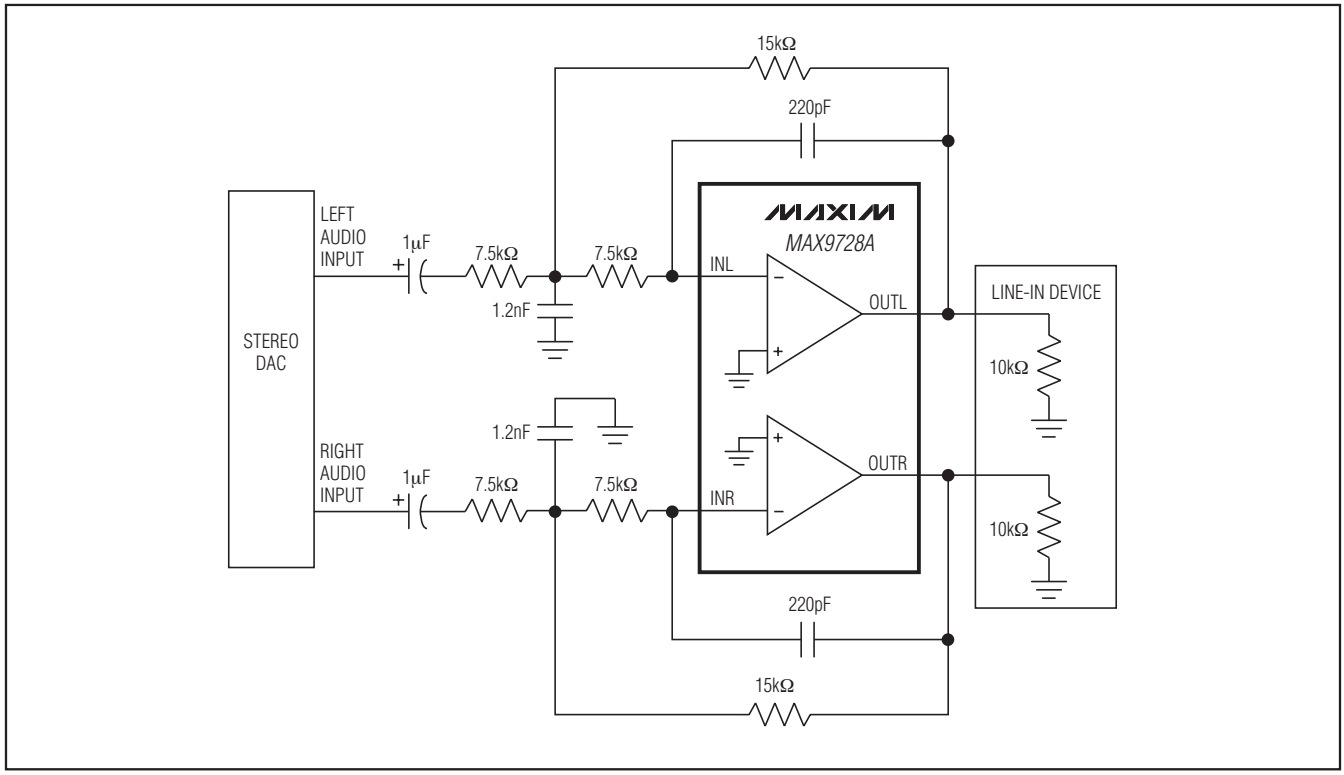

Figure 4. MAX9728A Line-Out Amplifier and Filter Block Configuration

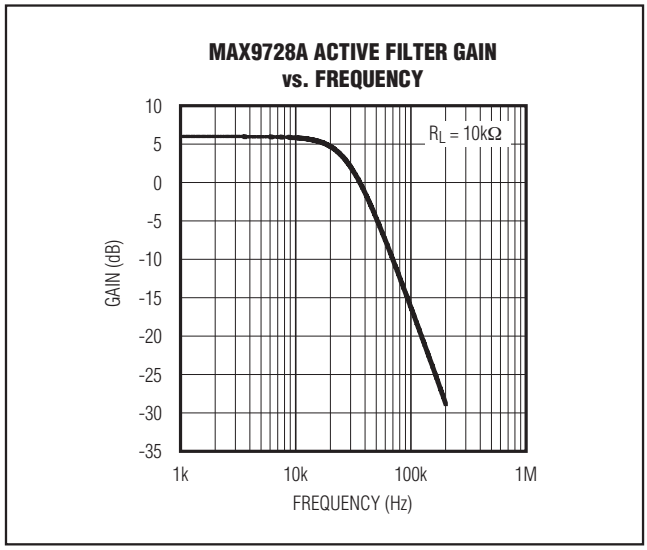

Figure 5. Frequency Response of Active Filter of Figure 4

60mW, DirectDrive, Stereo Headphone Amplifiers with Shutdown

System Diagram

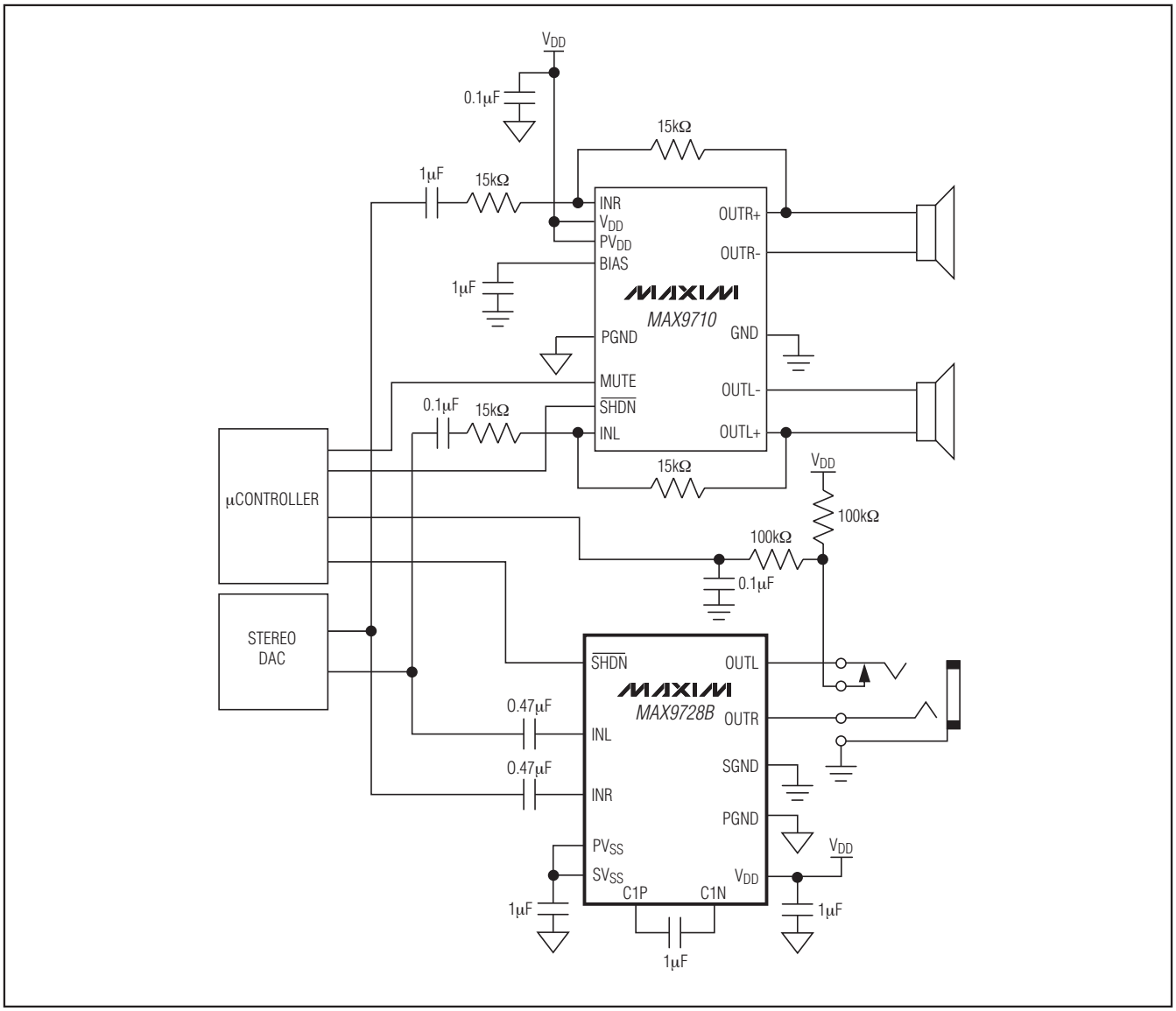

Functional Diagram/Typical Operating Circuits

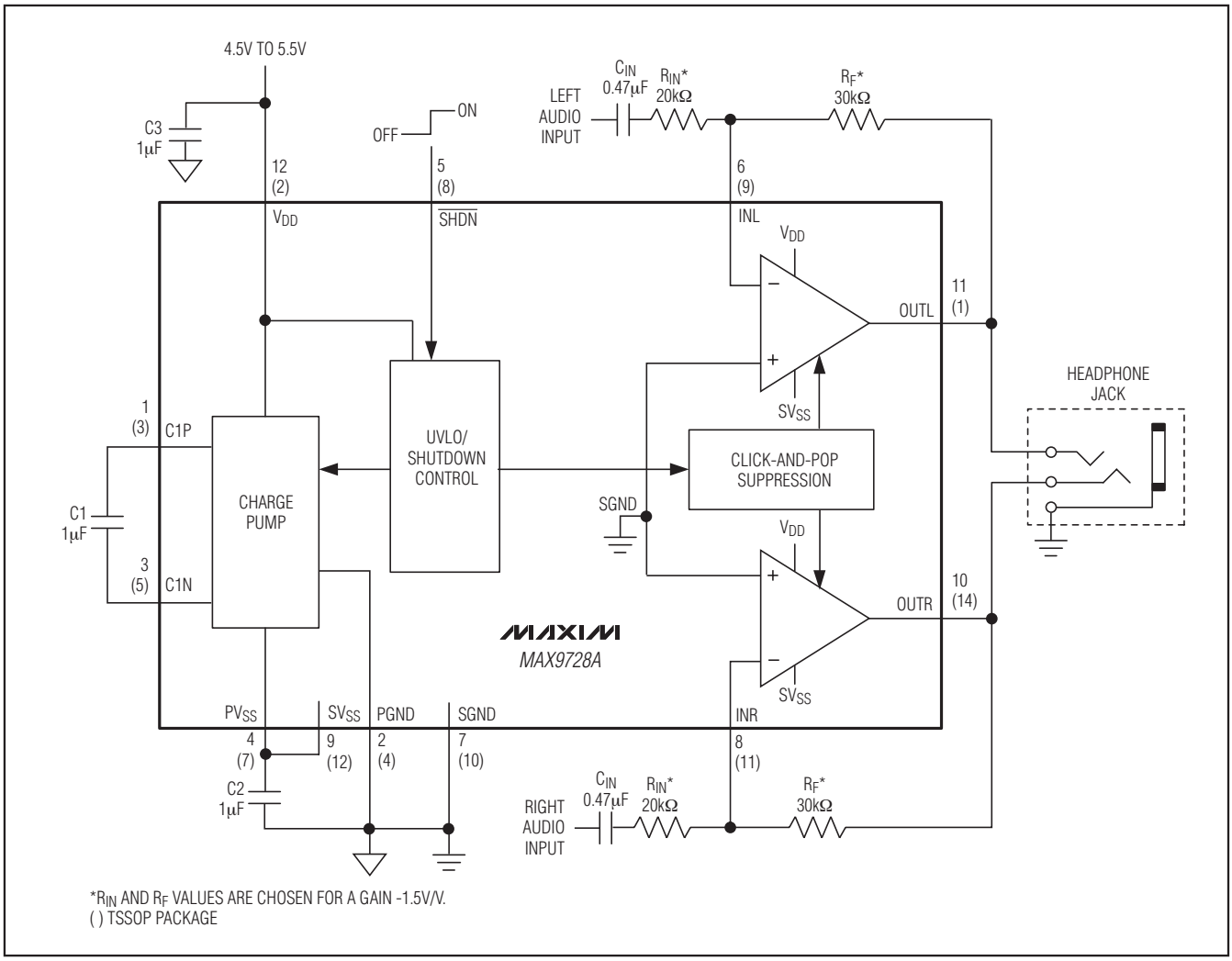

*R_{IN} AND R_F VALUES ARE CHOSEN FOR A GAIN -1.5V/V.
( ) TSSOP PACKAGE

60mW, DirectDrive, Stereo Headphone Amplifiers with Shutdown

Functional Diagram/Typical Operating Circuits (continued)

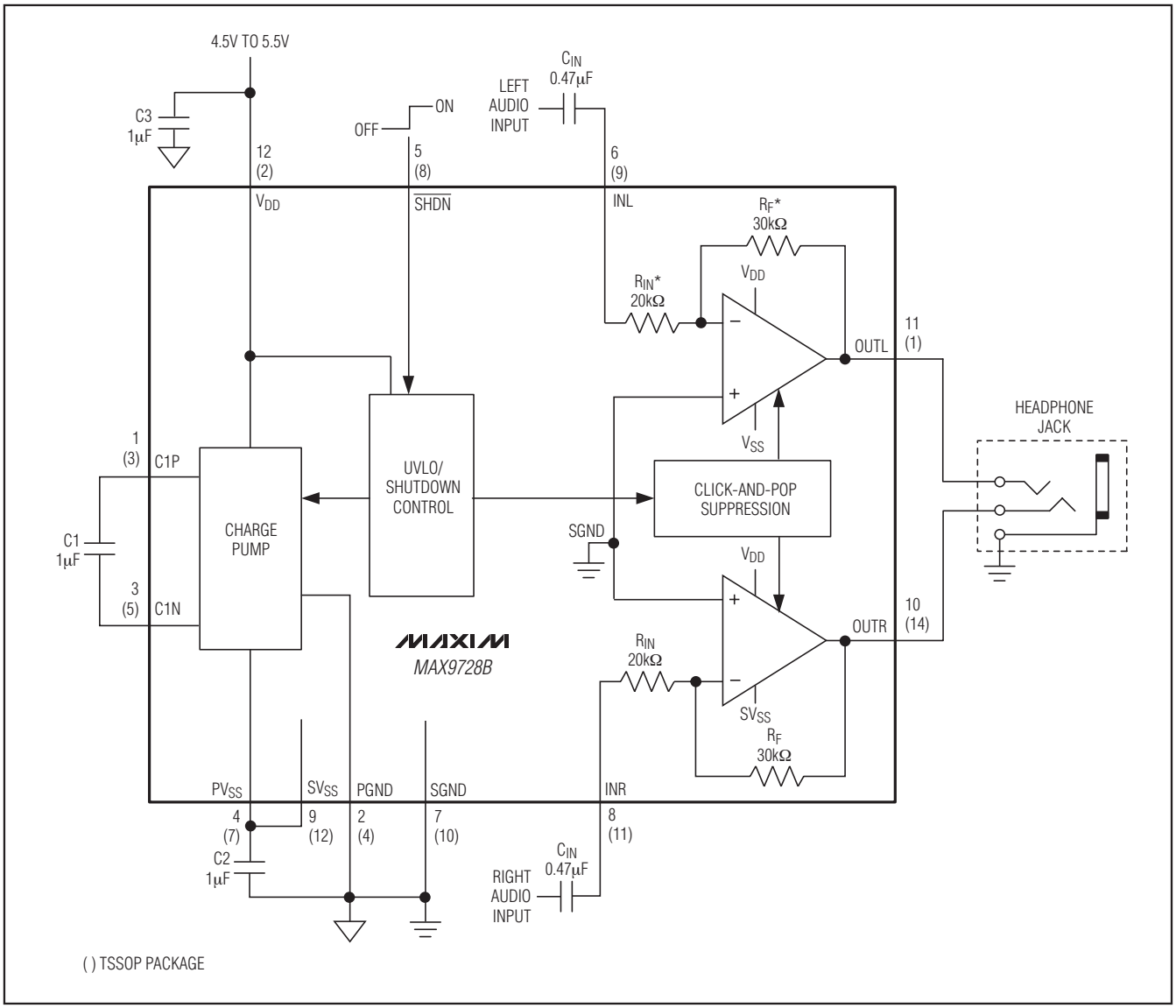

Pin Configurations

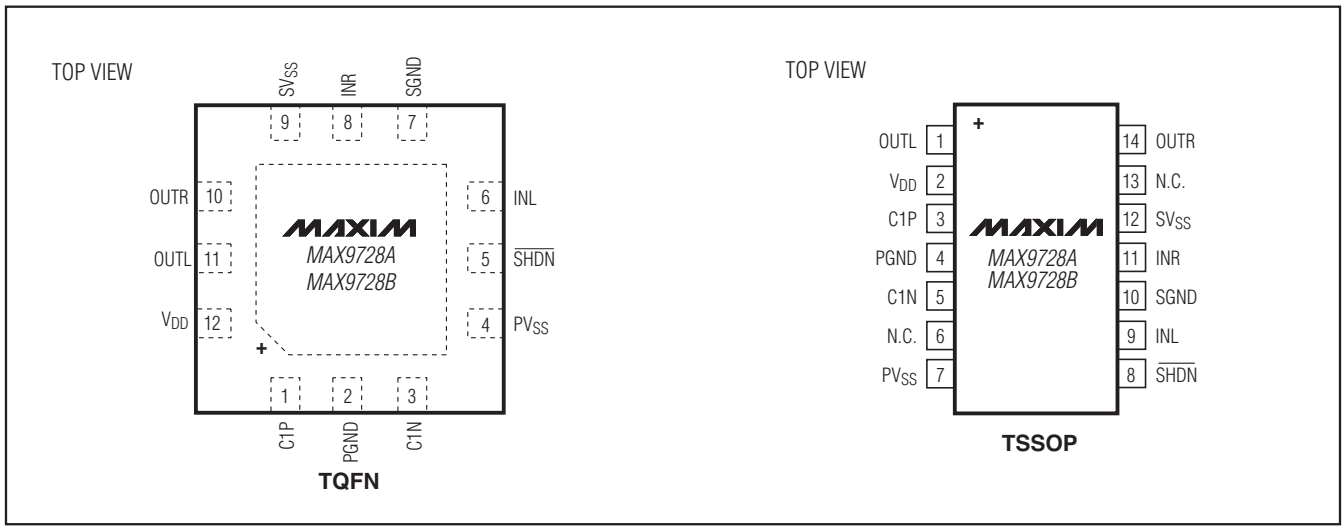

Chip Information

TRANSISTOR COUNT: 993

PROCESS: BiCMOS

60mW, DirectDrive, Stereo Headphone Amplifiers with Shutdown

Package Information

For the latest package outline information and land patterns, go to **www.maxim-ic.com/packages**. Note that a "+", "#", or "-" in the package code indicates RoHS status only. Package drawings may show a different suffix character, but the drawing pertains to the package regardless of RoHS status.

PACKAGE TYPE	PACKAGE CODE	DOCUMENT NO.
12 TQFN-EP	T1233-1	21-0136
14 TSSOP	U14-1	21-0066

12x16L QFN THIN.EPS

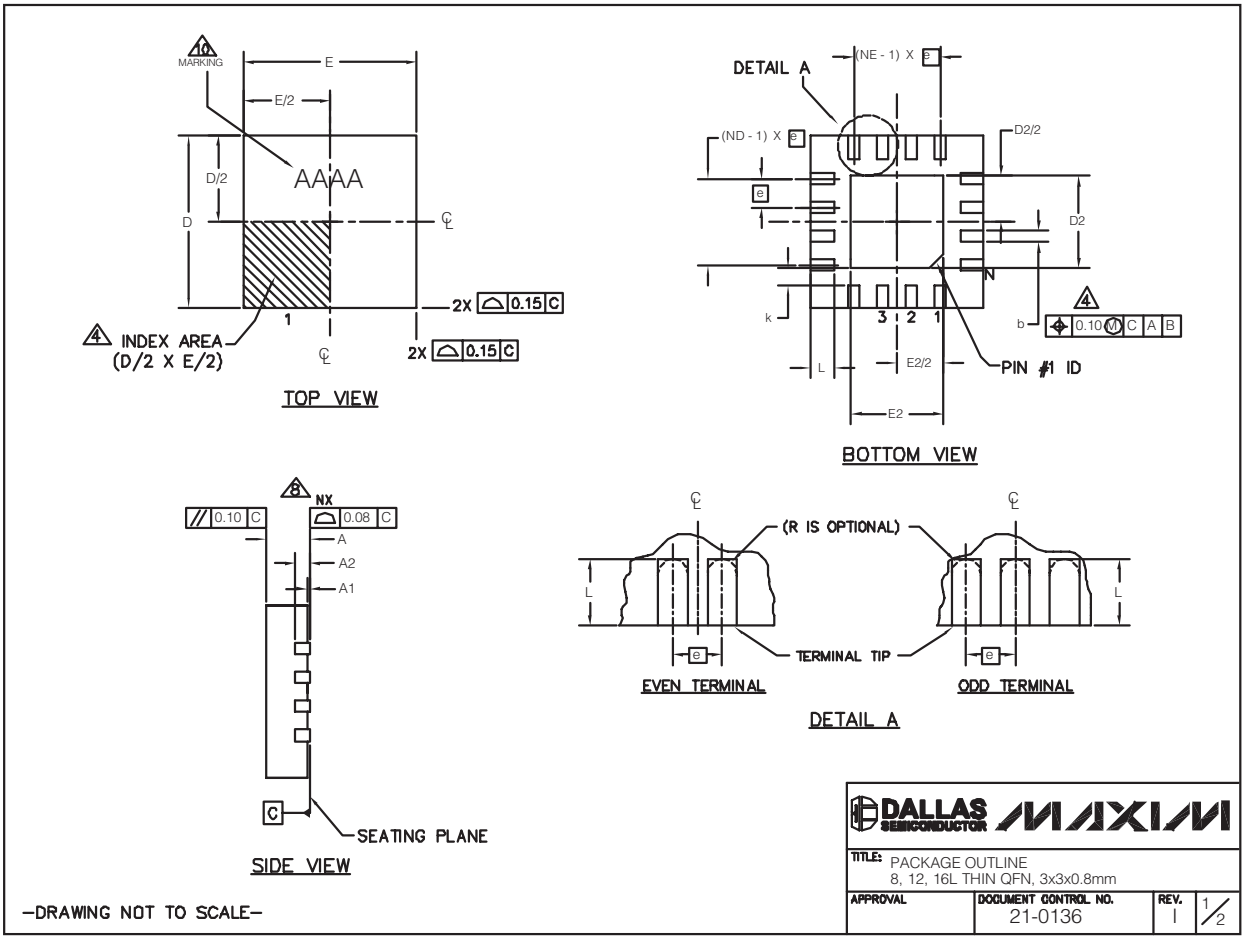

Package Information (continued)

For the latest package outline information and land patterns, go to **www.maxim-ic.com/packages**. Note that a "+", "#", or "-" in the package code indicates RoHS status only. Package drawings may show a different suffix character, but the drawing pertains to the package regardless of RoHS status.

PKG	8L 3x3			12L 3x3			16L 3x3		
REF.	MIN.	NOM.	MAX.	MIN.	NOM.	MAX.	MIN.	NOM.	MAX.
A	0.70	0.75	0.80	0.70	0.75	0.80	0.70	0.75	0.80
b	0.25	0.30	0.35	0.20	0.25	0.30	0.20	0.25	0.30
D	2.90	3.00	3.10	2.90	3.00	3.10	2.90	3.00	3.10
E	2.90	3.00	3.10	2.90	3.00	3.10	2.90	3.00	3.10
e	0.65 BSC.			0.50 BSC.			0.50 BSC.		
L	0.35	0.55	0.75	0.45	0.55	0.65	0.30	0.40	0.50
N	8			12			16		
ND	2			3			4		
NE	2			3			4		
A1	0	0.02	0.05	0	0.02	0.05	0	0.02	0.05
A2	0.20 REF			0.20 REF			0.20 REF		
k	0.25	-	-	0.25	-	-	0.25	-	-

EXPOSED PAD VARIATIONS								
PKG. CODES	D2			E2			PIN ID	JEDEC
	MIN.	NOM.	MAX.	MIN.	NOM.	MAX.		
TQ833-1	0.25	0.70	1.25	0.25	0.70	1.25	0.35 x 45°	WEEC
T1233-1	0.95	1.10	1.25	0.95	1.10	1.25	0.35 x 45°	WEED-1
T1233-3	0.95	1.10	1.25	0.95	1.10	1.25	0.35 x 45°	WEED-1
T1233-4	0.95	1.10	1.25	0.95	1.10	1.25	0.35 x 45°	WEED-1
T1633-2	0.95	1.10	1.25	0.95	1.10	1.25	0.35 x 45°	WEED-2
T1633F-3	0.65	0.80	0.95	0.65	0.80	0.95	0.225 x 45°	WEED-2
T1633FH-3	0.65	0.80	0.95	0.65	0.80	0.95	0.225 x 45°	WEED-2
T1633-4	0.95	1.10	1.25	0.95	1.10	1.25	0.35 x 45°	WEED-2
T1633-5	0.95	1.10	1.25	0.95	1.10	1.25	0.35 x 45°	WEED-2

NOTES:

1. DIMENSIONING & TOLERANCING CONFORM TO ASME Y14.5M-1994.
2. ALL DIMENSIONS ARE IN MILLIMETERS. ANGLES ARE IN DEGREES.
3. N IS THE TOTAL NUMBER OF TERMINALS.
4. THE TERMINAL #1 IDENTIFIER AND TERMINAL NUMBERING CONVENTION SHALL CONFORM TO JESD 95-1 SPP-012. DETAILS OF TERMINAL #1 IDENTIFIER ARE OPTIONAL, BUT MUST BE LOCATED WITHIN THE ZONE INDICATED. THE TERMINAL #1 IDENTIFIER MAY BE EITHER A MOLD OR MARKED FEATURE.
5. DIMENSION b APPLIES TO METALLIZED TERMINAL AND IS MEASURED BETWEEN 0.20 mm AND 0.25 mm FROM TERMINAL TIP.
6. ND AND NE REFER TO THE NUMBER OF TERMINALS ON EACH D AND E SIDE RESPECTIVELY.
7. DEPOPULATION IS POSSIBLE IN A SYMMETRICAL FASHION.
8. COPLANARITY APPLIES TO THE EXPOSED HEAT SINK SLUG AS WELL AS THE TERMINALS .
9. DRAWING CONFORMS TO JEDEC MO220 REVISION C.
10. MARKING IS FOR PACKAGE ORIENTATION REFERENCE ONLY.
11. NUMBER OF LEADS SHOWN ARE FOR REFERENCE ONLY.
12. WARPAGE NOT TO EXCEED 0.10mm.

—DRAWING NOT TO SCALE—

DALLAS SEMICONDUCTOR MAXIM

TITLE: PACKAGE OUTLINE
8, 12, 16L THIN QFN, 3x3x0.8mm

APPROVAL	DOCUMENT CONTROL NO.	REV.	
	21-0136	I	2/2

60mW, DirectDrive, Stereo Headphone Amplifiers with Shutdown

Package Information (continued)

For the latest package outline information and land patterns, go to **www.maxim-ic.com/packages**. Note that a "+", "#", or "-" in the package code indicates RoHS status only. Package drawings may show a different suffix character, but the drawing pertains to the package regardless of RoHS status.

TSSOP4.40mm.EPS

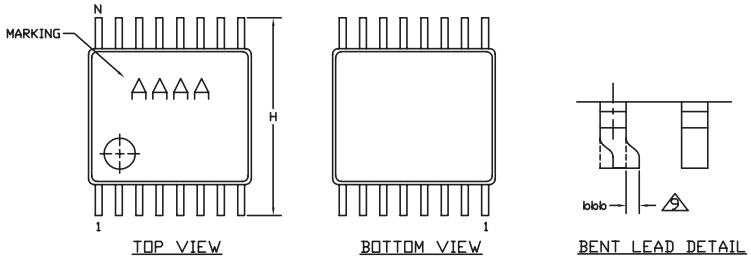

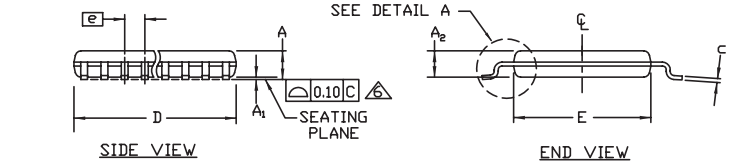



SYMBOL	COMMON DIMENSIONS			
	MILLIMETERS		INCHES	
	MIN.	MAX.	MIN.	MAX.
A	——	1.10		.043
A_1	0.05	0.15	.002	.006
A_2	0.85	0.95	.033	.037
b	0.19	0.30	.007	.012
b_1	0.19	0.25	.007	.010
c	0.09	0.20	.004	.008
c_1	0.09	0.14	.004	.006
D	SEE VARIATIONS		SEE VARIATIONS	
E	4.30	4.50	.169	.177
e	0.65 BSC		.026 BSC	
H	6.25	6.55	.246	.258
L	0.50	0.70	.020	.028
N	SEE VARIATIONS		SEE VARIATIONS	
α	0°	8°	0°	8°
bbb	0.10 MAX			

JEDEC MO-153	N		PKG. CODES	VARIATIONS			
				MILLIMETERS		INCHES	
				MIN.	MAX.	MIN.	MAX.
AB-1	14	D	U14-1, U14-2	4.90	5.10	.193	.201
AB	16	D	U16-1, U16-2	4.90	5.10	.193	.201
AC	20	D	U20-2, U20M-2 U20-3	6.40	6.60	.252	.260
AD	24	D	U24-1	7.70	7.90	.303	.311
AE	28	D	U28-1, U28-2, U28-3	9.60	9.80	.378	.386

NOTES
1. DIMENSIONS D AND E DO NOT INCLUDE FLASH
2. MOLD FLASH OR PROTRUSIONS NOT TO EXCEED 0.15mm PER SIDE
3. CONTROLLING DIMENSION: MILLIMETER
4. MEETS JEDEC OUTLINE MO-153. SEE JEDEC VARIATIONS TABLE
5. "N" REFERS TO NUMBER OF LEADS
6. LEAD COPLANARITY 0.10 MM MAX.
7. NUMBER OF LEADS SHOWN ARE FOR REFERENCE ONLY
8. MARKING IS FOR PACKAGE ORIENTATION REFERENCE ONLY
9. BENT LEAD 0.10 MM MAX.
10. ALL DIMENSIONS APPLY TO BOTH LEADED (-) AND PBFREE (+) PKG. CODES.

—DRAWING NOT TO SCALE—

MAXIM

TITLE: PACKAGE OUTLINE, TSSOP 4.40mm BODY

APPROVAL	DOCUMENT CONTROL NO.	REV.	
	21-0066	J	1/1

Revision History

REVISION NUMBER	REVISION DATE	DESCRIPTION	PAGES CHANGED
0	1/06	Initial release	—
1	7/09	Corrected top mark designations	1

Maxim cannot assume responsibility for use of any circuitry other than circuitry entirely embodied in a Maxim product. No circuit patent licenses are implied. Maxim reserves the right to change the circuitry and specifications without notice at any time.

© 2009 Maxim Integrated Products Maxim is a registered trademark of Maxim Integrated Products, Inc.