19-5979; Rev 0; 7/11

MAX98309 Evaluation Kit
Evaluates: MAX98309/MAX98310

General Description

The MAX98309 evaluation kit (EV kit) is a fully assembled and tested circuit board that evaluates the MAX98309 mono 1.4W Class AB audio amplifier. The amplifier gain can be set through external resistors. The EV kit operates from a single 2.5V to 5.5V power supply.

The EV kit can also evaluate the MAX98310 internally fixed gain mono 1.4W Class AB audio amplifier.

Features

- **2.5V to 5.5V Single-Supply Operation**
- **Differential or Single-Ended Input**
- **Pin-Selectable Turn-On Time**
- **1.8V Logic-Compatible $\overline{SHDN}$ Input**
- **Proven PCB Layout**
- **Fully Assembled and Tested**

***Ordering Information* appears at end of data sheet.**

Component List

DESIGNATION	QTY	DESCRIPTION
C1, C2, C3	3	1µF ±10%, 16V X5R ceramic capacitors (0402) TDK C1005X5R1C105K
C4	1	10µF ±10%, 6.3V X5R ceramic capacitor (0603) Murata GRM188R60J106K
C5	1	0.1µF ±10%, 16V X7R ceramic capacitor (0402) Murata GRM155R71C104K
GND, OUT+, OUT-, VDD	4	Binding posts
IN	1	White side-entry, PCB-mount phono jack

DESIGNATION	QTY	DESCRIPTION
JU1	1	3-pin header
JU2	1	4-pin header
JU3	1	2-pin header
R1–R4	4	10kΩ ±1% resistors (0402)
$\overline{SHDN}$	1	PCB miniature red test point
U1	1	Mono 1.4W Class AB audio amplifier (9 WLP) Maxim MAX98309EWL+
—	3	Shunts
—	1	PCB: MAX98309 EVALUATION KIT

Component Suppliers

SUPPLIER	PHONE	WEBSITE
Murata Electronics North America, Inc.	770-436-1300	www.murata-northamerica.com
TDK Corp.	847-803-6100	www.component.tdk.com

Note: *Indicate that you are using the MAX98309 when contacting these component suppliers.*

For pricing, delivery, and ordering information, please contact Maxim Direct at 1-888-629-4642, or visit Maxim's website at www.maxim-ic.com.

Quick Start

Recommended Equipment

- MAX98309 EV kit
- 2.5V to 5.5V DC supply
- 8Ω speaker
- Mono audio signal source

Procedure

The EV kit is fully assembled and tested. Follow the steps below to verify board operation. **Caution: Do not turn on the power supply until all connections are completed.**

1) Verify that shunts are installed as follows:
   JU1: Pins 2-3 (device enabled)
   JU2: Pins 1-2 (turn-on time of 100ms)
   JU3: Installed (single-ended input)
2) Connect the positive terminal of the power supply to the VDD PCB pad on the EV kit. Connect the negative terminal of the power supply to the GND PCB pad on the EV kit.
4) Verify that the audio source output is disabled.
5) Connect the single-ended mono audio source to the IN phono jack or between the IN+ and IN- PCB pads on the EV kit.
6) Connect the speaker across the OUT+ and OUT- test pads.
7) Set the power-supply output to 3.7V.
8) Enable the power-supply output.
9) Enable the audio source.
10) Verify that the speaker is playing the audio source signal.

Detailed Description of Hardware

The MAX98309 EV kit is a fully assembled and tested circuit board that evaluates the MAX98309 mono 1.4W Class AB audio amplifier. The amplifier gain can be set through external resistors.

The EV kit can also evaluate the MAX98310 internally fixed gain mono 1.4W Class AB audio amplifier. To evaluate the MAX98310, remove R2 and R4, and replace R1 and R3 with 0Ω resistors.

Shutdown Mode ($\overline{SHDN}$)

The EV kit features 2-pin jumper JU1 to control the active-low shutdown input of the IC. Drive $\overline{SHDN}$ high to place the device in normal operation; drive $\overline{SHDN}$ low to place the device in the low-power shutdown mode. See Table 1 for shunt positions.

Turn-On Time

The MAX98309/MAX98310 have excellent click-and-pop performance with respect to the $\overline{SHDN}$ pin activation/deactivation.

Jumper JU2 demonstrates the IC's selectable turn-on-time feature for optimized click-and-pop performance. Connect TON to GND for a 10ms turn-on time. Connect TON to VDD for a 100ms turn-on time. See Table 2 for selectable turn-on times.

The MAX98310 has a preset 5ms turn-on time.

Amplifier Gain

The EV kit provides resistors R1–R4 to externally set the differential gain. The default gain is 1V/V or 0dB. Set the gain of the amplifier as follows:

$$A_V = \frac{R_F}{R_{IN}}$$

where A_V is the desired voltage gain, R_F is the value of feedback resistors R2 and R4, and R_{IN} is the value of input resistors R1 and R3.

When evaluating the MAX98310, jumper JU2 controls the GAIN input pin and selects the four internally fixed differential gain options. See Table 2 for selectable gain options.

Input Mode

Jumper JU3 provides the option to select between a differential or single-ended input mode for the EV kit. See Table 3 for jumper JU3 configurations.

Table 1. Shutdown Mode (JU1)

SHUNT POSITION	$\overline{SHDN}$ PIN	DEVICE OPERATION
1-2	Connected to GND	Disabled
2-3*	Connected to VDD	Enabled

**Default position.*

Table 2. Turn-On Time (JU2)

SHUNT POSITION	TON PIN (MAX98309) GAIN PIN (MAX98310)	MAX98309 TURN-ON TIME (ms)	MAX98310 GAIN (dB)
1-2*	Connected to VDD	100	0
1-3	Connected to BIAS	N/A	9
1-4	Connected to GND	10	3
Open	Unconnected	N/A	6

**Default position.*

Table 3. Input Mode Setting (JU3)

SHUNT POSITION	IN- PCB PAD	INPUT MODE
Installed*	Connected to GND	Single-ended input
Not installed	Connected to a user-supplied negative differential input	Differential input

**Default position.*

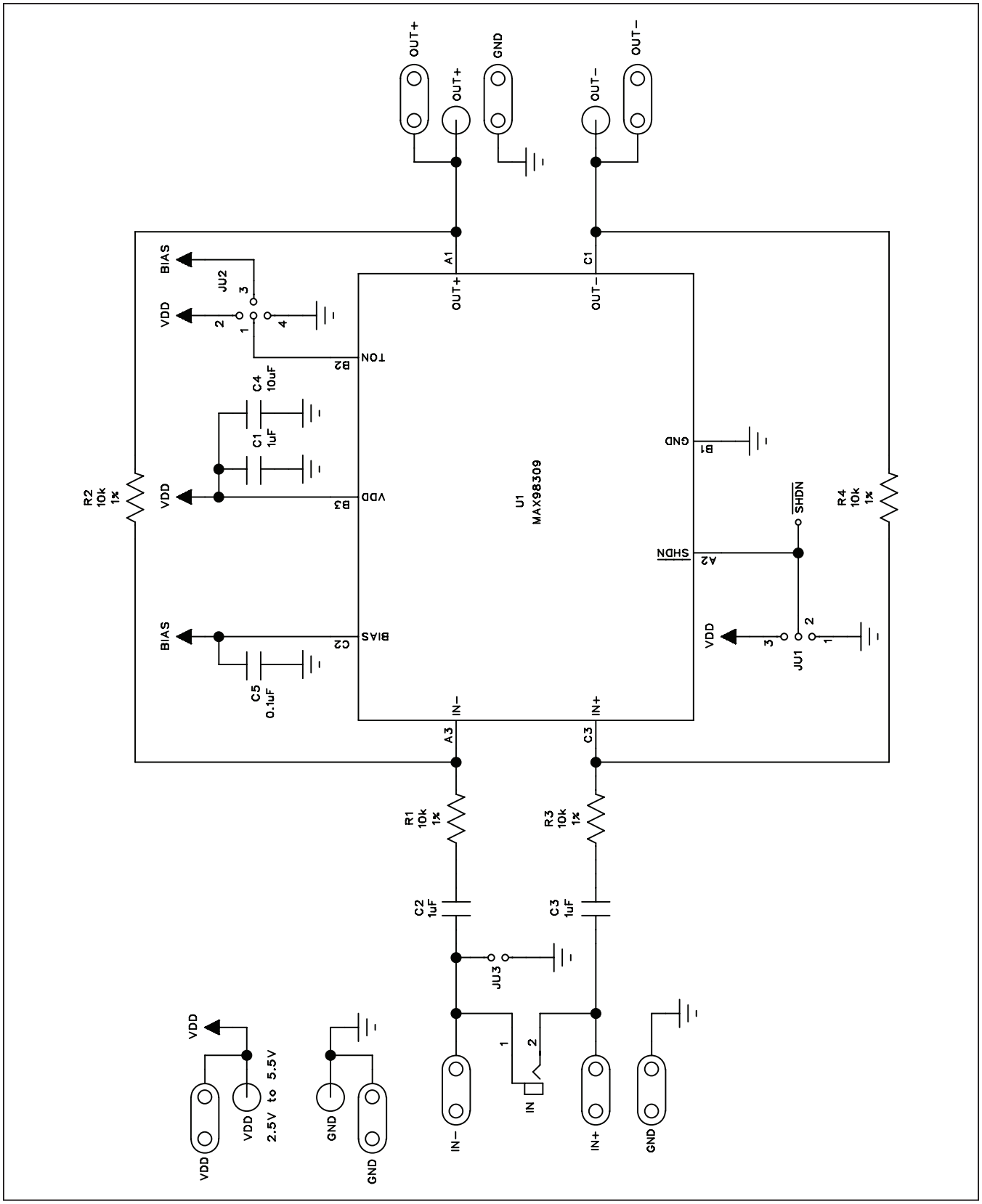

Figure 1. MAX98309 EV Kit Schematic

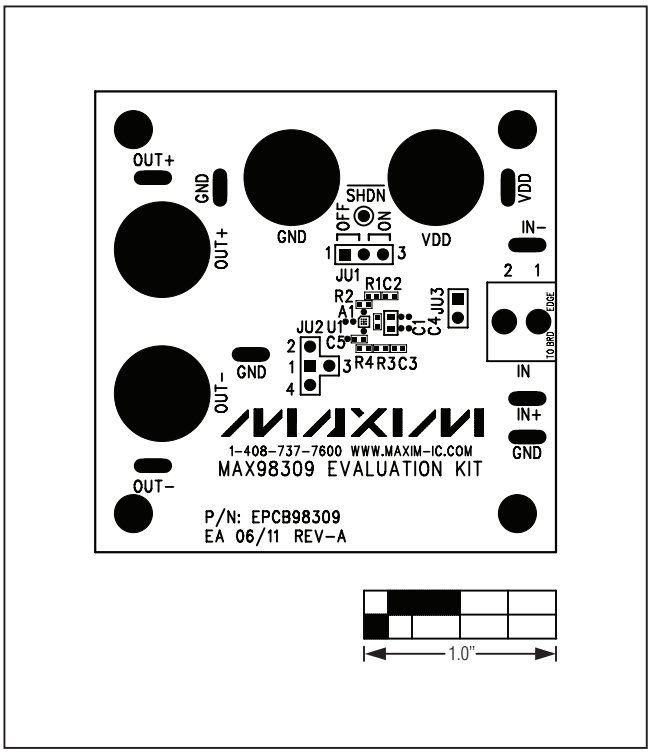

Figure 2. MAX98309 EV Kit Component Placement Guide—Component Side

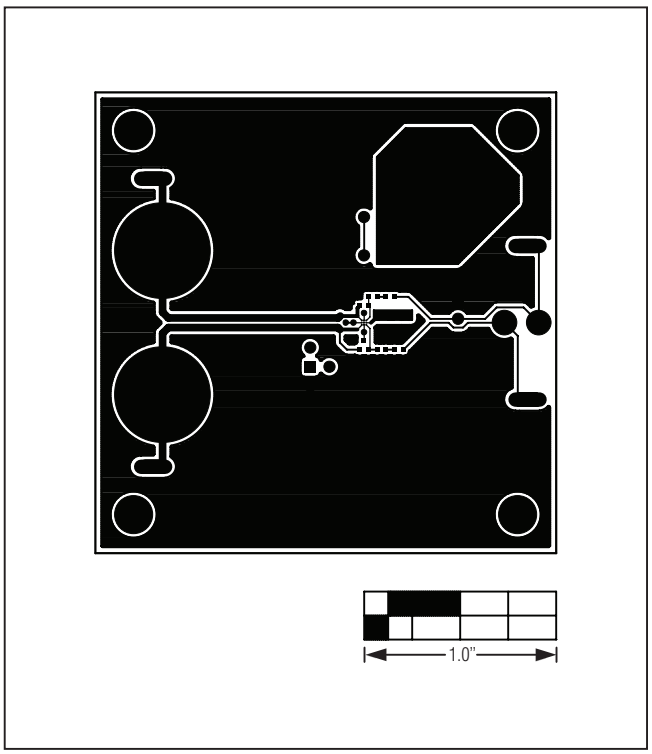

Figure 3. MAX98309 EV Kit PCB Layout—Component Side

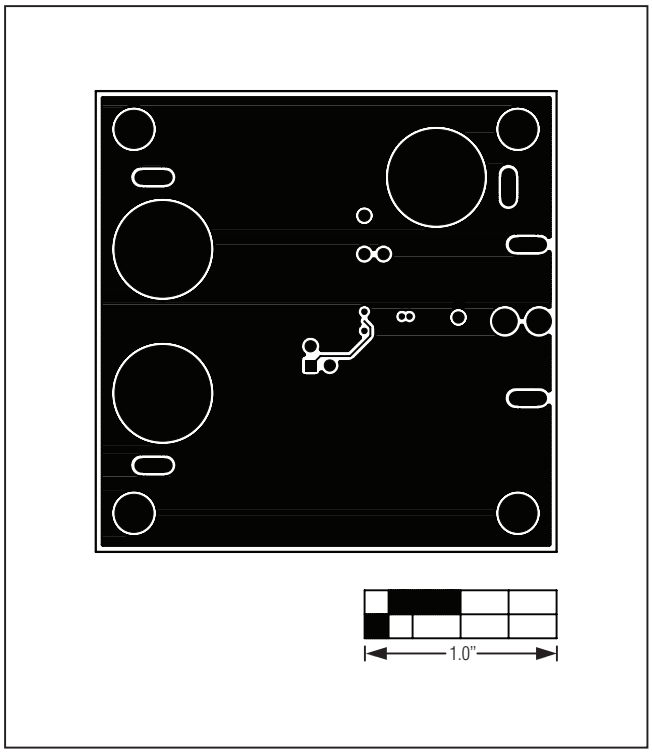

Figure 4. MAX98309 EV Kit PCB Layout—GND Layer 2

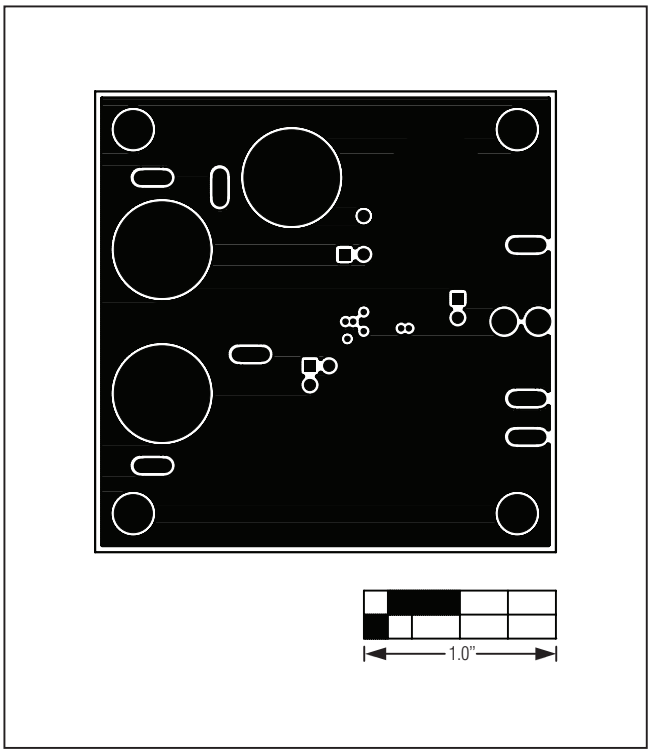

Figure 5. MAX98309 EV Kit PCB Layout—VDD Layer 3

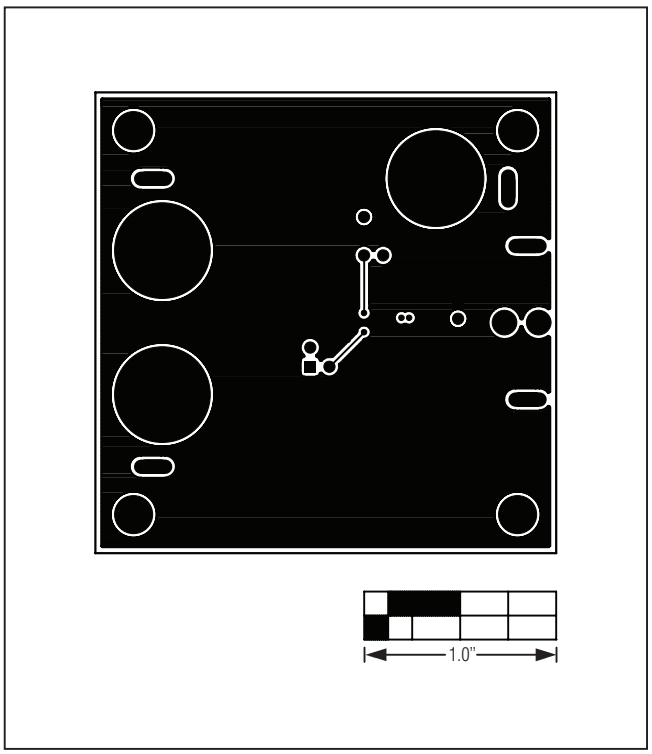

Figure 6. MAX98309 EV Kit PCB Layout—Solder Side

Ordering Information

PART	TYPE
MAX98309EVKIT#	EV Kit

#Denotes RoHS compliant.

Revision History

REVISION NUMBER	REVISION DATE	DESCRIPTION	PAGES CHANGED
0	7/11	Initial release	—

Maxim cannot assume responsibility for use of any circuitry other than circuitry entirely embodied in a Maxim product. No circuit patent licenses are implied. Maxim reserves the right to change the circuitry and specifications without notice at any time.

© 2011 Maxim Integrated Products Maxim is a registered trademark of Maxim Integrated Products, Inc.