Click here to ask about the production status of specific part numbers.

MAX98400A/MAX98400B — Stereo, High-Power, Class D Amplifiers

General Description

The MAX98400A/MAX98400B Class D amplifiers provide high-performance, thermally efficient amplifier solutions. The MAX98400A delivers 2x20W into 8Ω loads or 1x40W into a 4Ω load. The MAX98400B delivers 2x12W into 8Ω loads.

An integrated limiting circuit prevents output clipping distortion, protects small speakers from transient voltages, and reduces power dissipation.

A thermal-foldback feature can be enabled to automatically reduce the output power at above a junction temperature of +120°C. Traditional thermal protection is also available in addition to robust overcurrent protection.

The ICs operate from a single 8V to 28V supply and provide a high 67dB PSRR, eliminating the need for a regulated power supply. They offer up to 90% efficiency from a 12V supply.

Filterless modulation allows the ICs to pass EN55022B EMI limits with 1m cables using only a low-cost ferrite bead and small-value capacitor on each output.

Both devices feature eight digitally controlled gain settings.

Comprehensive click-and-pop reduction circuitry minimizes noise coming into and out of shutdown.

The MAX98400A/MAX98400B are available in 36-pin and 24-pin TQFN packages, respectively, and are specified over the -40°C to +85°C temperature range.

Features

- Wide 8V to 28V Supply Voltage Range
- Single-Supply Operation
- Low EMI: Active Emissions Limiting
- Clipping Limiter
- Low Quiescent Current
- Thermal Foldback
- Thermal and Overcurrent Protection

Applications

- LCD/PDP Televisions
- LCD Monitors
- MP3 Docking Stations
- Notebook PCs

***Ordering Information* appears at end of data sheet.**

Simplified Block Diagram

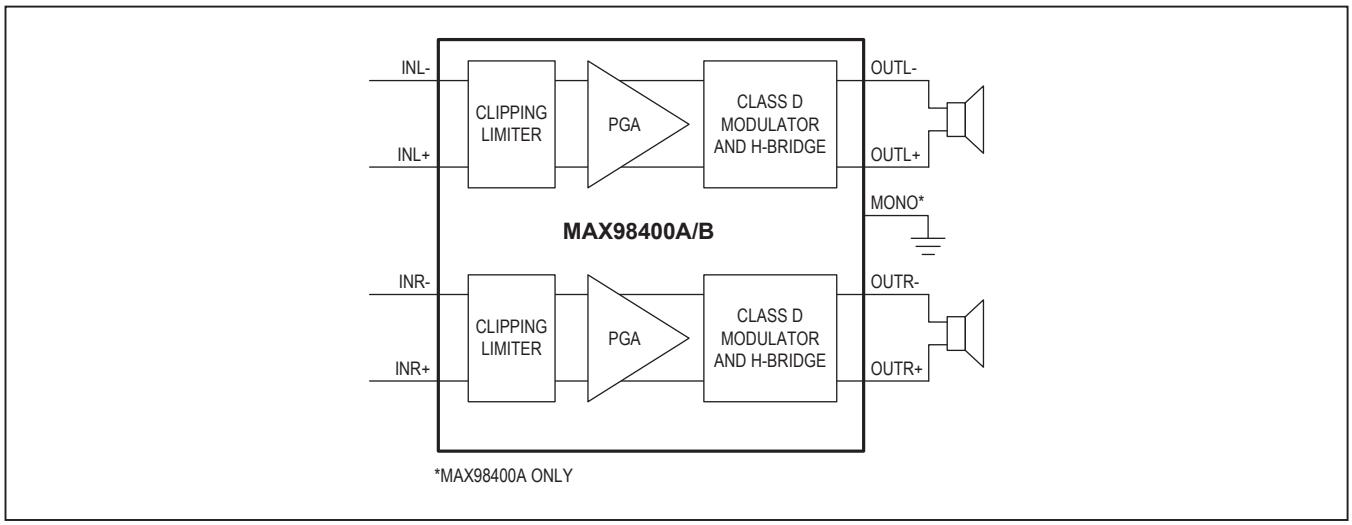

maxim integrated™

TABLE OF CONTENTS

Absolute Maximum Ratings 4
Electrical Characteristics 4
Typical Operating Characteristics 7
Pin Configurations 12
Pin Descriptions 12
Stereo Configuration for MAX98400A 14
Mono Configuration for MAX98400A 15
Detailed Description 15
Efficiency 16
Shutdown 16
Click-and-Pop Suppression 16
Mono Configuration 16
Clipping Limiter 16
Limiter Threshold Control (LIM_TH) 17
Release Time Control (RELEASE) 17
Preamplifier Gain Setting 18
Protection 18
Thermal Foldback 18
Overtemperature Protection 18
Overcurrent Protection 18
Applications Information 18
Filterless Class D Operation 18
Inductor-Based Output Filters 19
Component Selection 19
Input Capacitor 19
Power Supplies 19
Internal Regulator V_S 19
Supply Bypassing, Layout, and Grounding 19
Chip Information 19
Functional Diagrams 20
Package Information 22
Revision History 26

LIST OF FIGURES

Figure 1. MAX98400B EMI Performance 18
Figure 2. MAX98400A Efficiency vs. Class AB Effifciency 18
Figure 3. Limiter Control, Mode3 Configuration (Table 1) 19
Figure 4. Output Filter for PWM Mode 21

LIST OF TABLES

Table 1. Limiter Control Modes 19
Table 2. Gain Selection 20
Table 3. Filter Component Selection 21

Absolute Maximum Ratings

PVDD to PGND ..... -0.3V to +30V
V_S to GND ..... -0.3V to +6V
$\overline{SHDN}$, MONO to GND ..... -0.3V to +6V
IN_ to GND ..... -0.3V to +6V
G1, G2, RELEASE, TEMPLOCK, LIM_TH to GND ..... -0.3V to (V_S + 0.3V)
OUT_ to PGND ..... -0.3V to (V_{PVDD} + 0.3V)
PGND to GND ..... -0.3V to +0.3V
Continuous Current into OUT_ ..... +2.4A
Continuous Current into PVDD, PGND ..... +4.8A
Continuous Current into All Other Pins ..... +10mA
Duration of OUT_ Short Circuit to PVDD or PGND .. Continuous
Duration of Short Circuit Between OUT_+ and OUT_- ..... Continuous

Continuous Power Dissipation (T_A = +70°C)
36-Pin TQFN Multilayer Board
(derate 35.7mW/°C above +70°C) 2857.1mW
θ_{JA} (Note 1) ..... 28°C/W
θ_{JC} (Note 1) ..... 1°C/W
24-Pin TQFN Multilayer Board
(derate 27.8mW/°C above +70°C) 35.7mW
θ_{JA} (Note 1) ..... 36°C/W
θ_{JC} (Note 1) ..... 3°C/W
Junction Temperature ..... +150°C
Operating Temperature Range ..... -40°C to +85°C
Storage Temperature Range ..... -65°C to +150°C
Lead Temperature (soldering, 10s) ..... +300°C
Soldering Temperature (reflow) ..... +260°C

Note 1: Package thermal resistances were obtained using the method described in JEDEC specification JESD51-7, using a four-layer board. For detailed information on package thermal considerations, refer to **www.maximintegrated.com/thermal-tutorial**.

Stresses beyond those listed under "Absolute Maximum Ratings" may cause permanent damage to the device. These are stress ratings only, and functional operation of the device at these or any other conditions beyond those indicated in the operational sections of the specifications is not implied. Exposure to absolute maximum rating conditions for extended periods may affect device reliability.

Electrical Characteristics

(V_{PVDD} = 18V, C_{IN} = 1µF, $V_{\overline{SHDN}}$ = 5V, LIM_TH = V_S, TEMPLOCK = unconnected; G1 = GND, G2 = open (gain = 20.1dB), C_{REL} = 1µF, C1 = C2 = 1µF, R_L = ∞, AC measurement bandwidth 20Hz to 20kHz, differential input signal, T_A = T_{MIN} to T_{MAX}, unless otherwise noted. Typical values are at T_A = +25°C.) (Notes 2, 3)

PARAMETER	SYMBOL	CONDITIONS	MIN	TYP	MAX	UNITS
AMPLIFIER DC CHARACTERISTICS						
PVDD Supply Voltage Range	V_{PVDD}	Inferred from PVDD_PSRR	8		28	V
V_S Supply Input Voltage	V_S	Inferred from I_{VS} test	4.75		5.5	V
Quiescent Current	I_{PVDD}	Dual-supply mode: V_S = 4.75V, T_A = +25°C		10	15	mA
	I_{VS}			6	8.2	
Single-Supply Quiescent Current	I_{PVDD}	Single-supply mode: T_A = +25°C		16	23	mA
		R_L = 8Ω (Note 3)		17		
Shutdown Current	I_{SHDN_PVDD}	$V_{\overline{SHDN}}$ = 0V, T_A = +25°C, V_S = 5.5V		8	20	µA
	I_{SHDN_VS}			3	10	
PVDD Undervoltage Lockout	V_{UVLO}			7	7.9	V
V_S Regulator Output Voltage	V_S		4.2	4.47	4.75	V
INPUT STAGE						
Differential Input Voltage Range					2	V_{RMS}
Single-Ended Input Voltage Range					1	V_{RMS}
Common-Mode Rejection Ratio	CMRR			60		dB
Input Resistance		Differential V_{LIM_TH} = 0V, gain = +35dB	20	32		kΩ

Electrical Characteristics (continued)

(VPVDD = 18V, CIN = 1µF, $V_{\overline{SHDN}}$ = 5V, LIM_TH = VS, TEMPLOCK = unconnected; G1 = GND, G2 = open (gain = 20.1dB), CREL = 1µF, C1 = C2 = 1µF, RL = ∞, AC measurement bandwidth 20Hz to 20kHz, differential input signal, TA = TMIN to TMAX, unless otherwise noted. Typical values are at TA = +25°C.) (Notes 2, 3)

PARAMETER	SYMBOL	CONDITIONS		MIN	TYP	MAX	UNITS
POWER STAGE							
Shutdown to Full Operation	t_{SON}					11	ms
Gain Accuracy					±0.8	±4	%
Left-to-Right Gain Matching		All gain settings				±2	%
Crosstalk		1kHz			-85		dB
		10kHz			-68		
Output Offset Voltage	V_{OS}	TA = +25°C			±8	±45	mV
Click-and-Pop Level	K_{CP}	Peak voltage, 32 samples/s, A-weighted, TA = +25°C (Notes 4, 5)	Into shutdown		-47		dBV
			Out of shutdown		-56		
PVDD Power-Supply Rejection Ratio	$PSRR_{PVDD}$	VPVDD = 8V to 28V		52	63		dB
		1kHz, 100mVP-P ripple			67		
		10kHz, 100mVP-P ripple			57		
VS Power-Supply Rejection Ratio	$PSRR_{VS}$	VS = 4.75V to 5.5V		39	55		dB
		1kHz, 100mVP-P ripple			50		
		10kHz, 100mVP-P ripple			40		
MAX98400A Output Power	P_{OUT}	Stereo, RL = 8Ω, 10% THD+N, fIN = 1kHz (Note 3)			22		W
		Mono, RL = 4Ω, 10% THD+N, fIN = 1kHz (Note 3)			44		
MAX98400B Output Power	P_{OUT}	Stereo, RL = 8Ω, 10% THD+N, fIN = 1kHz (Note 3)			15		
Total Harmonic Distortion Plus Noise	THD+N	POUT = 0.1W to POUT/2, fIN = 20Hz to 20kHz, RL = 8Ω			0.3		%
		POUT/2, fIN = 1kHz, RL = 8Ω			0.03		
Output Noise	V_N	A-weighted			100		μV_{RMS}
Efficiency	η	POUT = 2x20W, RL = 8Ω (MAX98400A) fIN = 1kHz (Note 3)			90		%
Current Limit	I_{LIM}			3.5	5		A
Output FET Resistance	R_{DSON}				0.4		Ω
Switching Frequency	f_{SW}			265	330	395	kHz
Peak Output Voltage		VPVDD = 28V		20	26		V
LIMITER							
Attack Time		VLIM_TH = 0V			240	500	µs
Release Time		VLIM_TH = 0V			0.8		s
Maximum Trigger Level		VPVDD = 14V (Note 6)		4			dBFS
Minimum Trigger Level		(Note 7)				-6	dBFS
Trigger Level		VLIM_TH = 0V		-1	0	+1	dBFS
Compression Range		VLIM_TH = 0V		-12			dB

Electrical Characteristics (continued)

(V_{PVDD} = 18V, C_{IN} = 1µF, $V_{\overline{SHDN}}$ = 5V, LIM_TH = V_S, TEMPLOCK = unconnected; G1 = GND, G2 = open (gain = 20.1dB), C_{REL} = 1µF, C1 = C2 = 1µF, R_L = ∞, AC measurement bandwidth 20Hz to 20kHz, differential input signal, T_A = T_{MIN} to T_{MAX}, unless otherwise noted. Typical values are at T_A = +25°C.) (Notes 2, 3)

PARAMETER	SYMBOL	CONDITIONS	MIN	TYP	MAX	UNITS
VGA Distortion		Compression = 0 to -12dB		3.5		%
LIM_TH Input-Voltage Low (PVDD Tracking)			0.15			V
LIM_TH Input-Voltage High (Limiter Off)					V_S - 1	V
Channel-to-Channel Attenuation Tracking				±1		dB
THERMAL FOLDBACK						
Internal Templock Resistor			120	205	310	kΩ
Trigger Temperature				+130		°C
Hard Thermal Protection				+165		°C
LOGIC INPUT (G1, G2)						
Sink Current		T_A = +25°C, V_{G1}, V_{G2} = 0V	+2.5	+5	+8	µA
Source Current		T_A = +25°C, V_{G1}, V_{G2} = V_S	-8	-5	-2.5	µA
Input High Threshold					0.8 x V_S	V
Input Low Threshold			0.3 x V_S			V
Input Three-State Window			0.45 x V_S	0.5 x V_S	0.55 x V_S	V
LOGIC INPUT ($\overline{SHDN}$, MONO (MAX98400A Only))						
Input Leakage Current	I_{IN}	T_A = +25°C			±10	µA
Input High Threshold	V_{INH}		2			V
Input Low Threshold	V_{INL}				0.4	V
Input-Voltage Hysteresis				100		mV

Note 2: 100% production tested at T_A = +25°C. Specifications over temperature limits are guaranteed by design.

Note 3: The MAX98400A stereo mode is specified with an 8Ω resistive load in series with a 68µH inductive load connected across BTL outputs. The MAX98400A mono mode is specified with a 4Ω resistive load in series with 33µH inductive load. The MAX98400B is specified with an 8Ω resistive load in series with a 68µH inductive load connected across BTL outputs.

Note 4: Amplifier inputs AC-coupled to GND.

Note 5: Mode transitions controlled by $\overline{SHDN}$.

Note 6: Relative to equivalent full-scale undistorted output. Full scale (FS) = V_{PVDD} x 0.95.

Note 7: Relative to equivalent full-scale undistorted output. Full scale (FS) = V_{PVDD}.

Typical Operating Characteristics

(MAX98400A, V_{PVDD} = 18V, $V_{\overline{SHDN}}$ = 5V, LIM_TH = V_S, TEMPLOCK = unconnected; G1 = GND, G2 = open (gain = 20.1dB), C_{IN} = C_{REL} = C1 = C2 = 1µF, typical values are at T_A = +25°C, unless otherwise noted.)

TOTAL HARMONIC DISTORTION PLUS NOISE vs. FREQUENCY

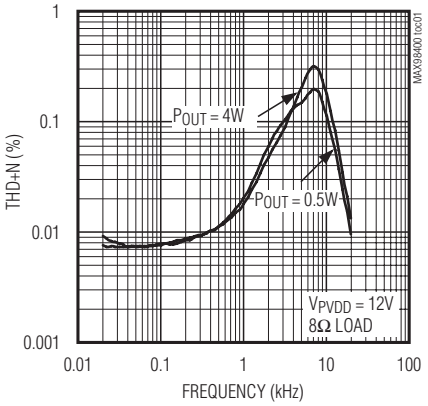

TOTAL HARMONIC DISTORTION PLUS NOISE vs. FREQUENCY

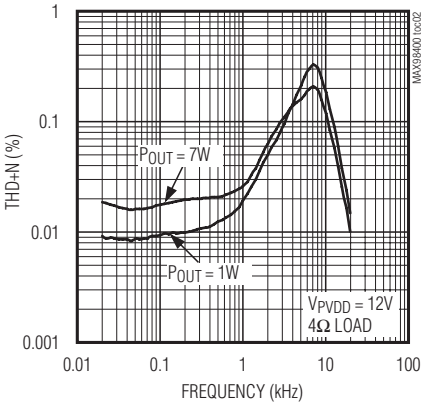

TOTAL HARMONIC DISTORTION PLUS NOISE vs. FREQUENCY

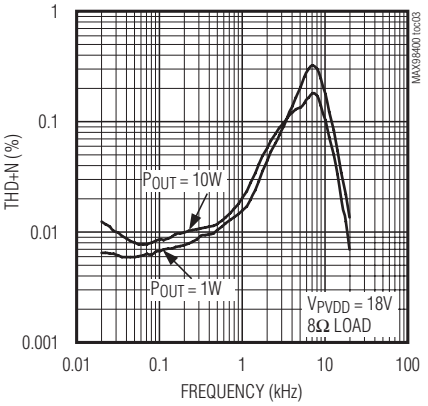

TOTAL HARMONIC DISTORTION PLUS NOISE vs. OUTPUT POWER

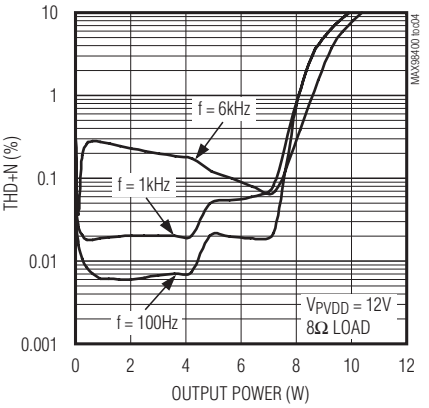

TOTAL HARMONIC DISTORTION PLUS NOISE vs. OUTPUT POWER

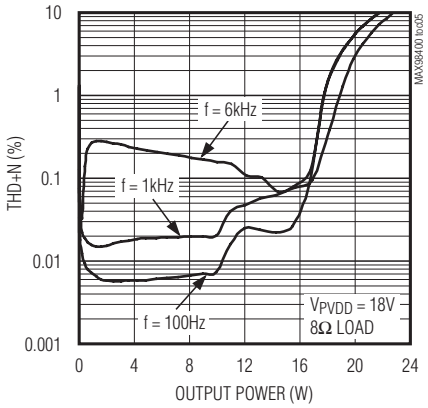

TOTAL HARMONIC DISTORTION PLUS NOISE vs. OUTPUT POWER

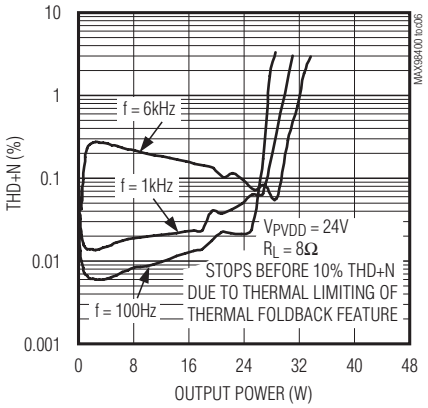

TOTAL HARMONIC DISTORTION PLUS NOISE vs. OUTPUT POWER

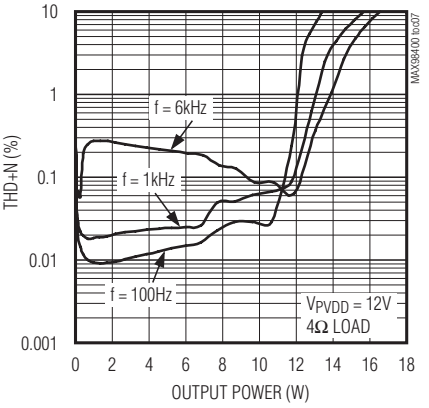

EFFICIENCY vs. OUTPUT POWER

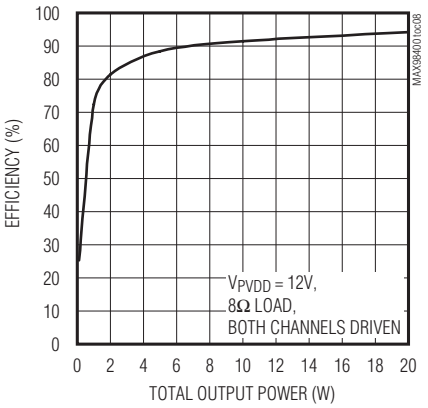

EFFICIENCY vs. OUTPUT POWER

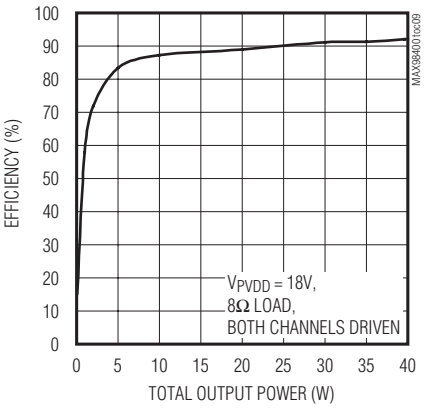

Typical Operating Characteristics (continued)

(MAX98400A, V_{PVDD} = 18V, $V_{\overline{SHDN}}$ = 5V, LIM_TH = V_S, TEMPLOCK = unconnected; G1 = GND, G2 = open (gain = 20.1dB), C_{IN} = C_{REL} = C1 = C2 = 1µF, typical values are at T_A = +25°C, unless otherwise noted.)

EFFICIENCY vs. OUTPUT POWER

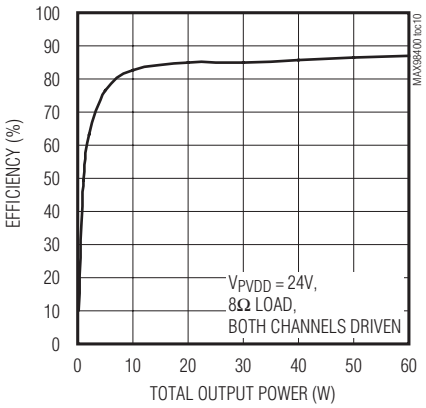

EFFICIENCY vs. OUTPUT POWER

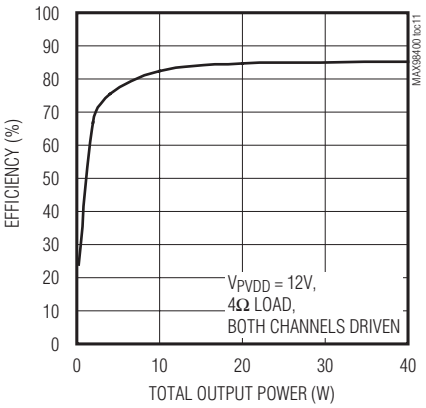

MAXIMUM OUTPUT POWER vs. SUPPLY VOLTAGE (WITH THERMAL SHUTDOWN)

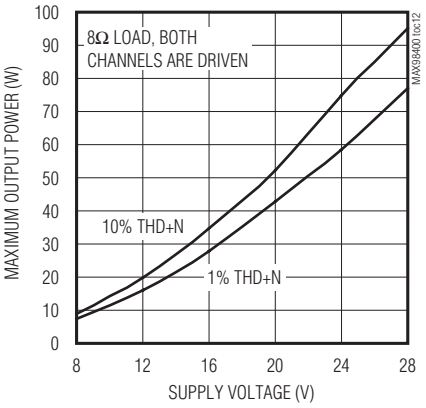

MAXIMUM OUTPUT POWER vs. SUPPLY VOLTAGE (WITH THERMAL SHUTDOWN)

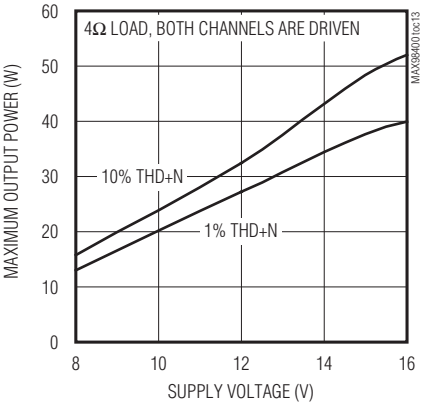

OUTPUT POWER vs. LOAD

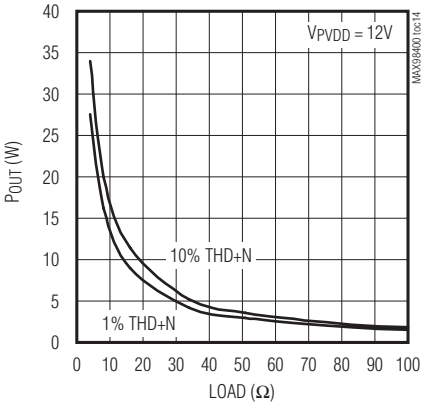

OUTPUT POWER vs. LOAD

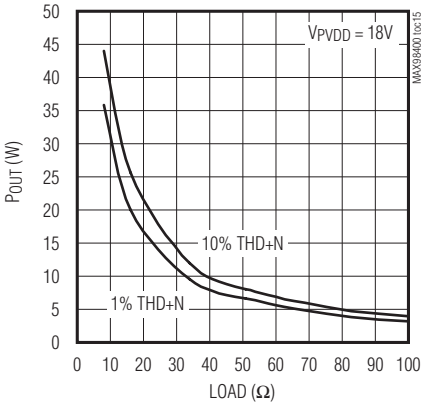

OUTPUT POWER vs. LOAD

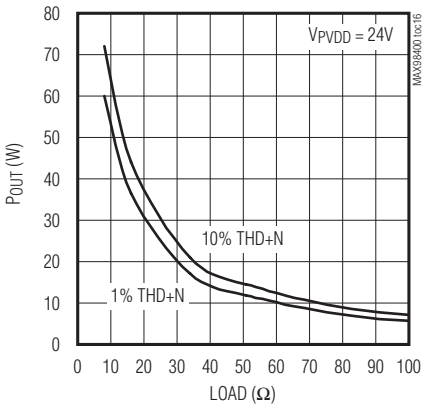

POWER-SUPPLY REJECTION RATIO

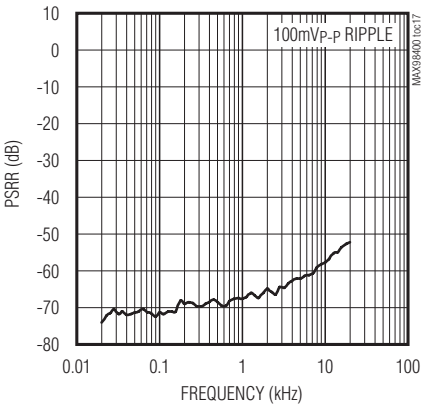

CROSSTALK vs. FREQUENCY

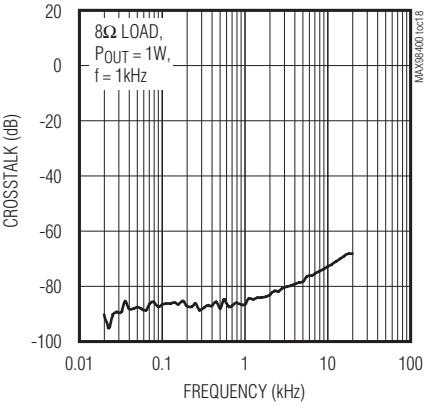

Typical Operating Characteristics (continued)

(MAX98400A, V_{PVDD} = 18V, $V_{\overline{SHDN}}$ = 5V, LIM_TH = V_S, TEMPLOCK = unconnected; G1 = GND, G2 = open (gain = 20.1dB), C_{IN} = C_{REL} = C1 = C2 = 1µF, typical values are at T_A = +25°C, unless otherwise noted.)

INBAND OUTPUT SPECTRUM

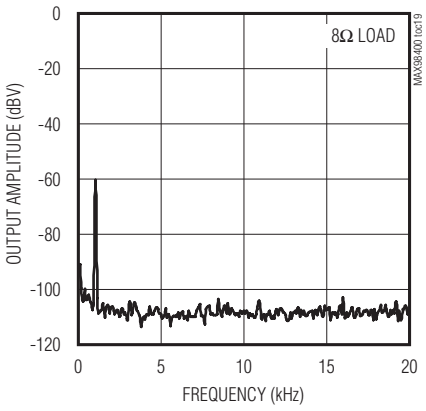

WIDEBAND OUTPUT SPECTRUM

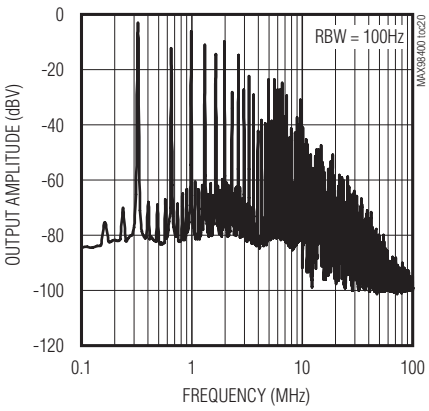

$\overline{SHDN}$ ON/OFF RESPONSE

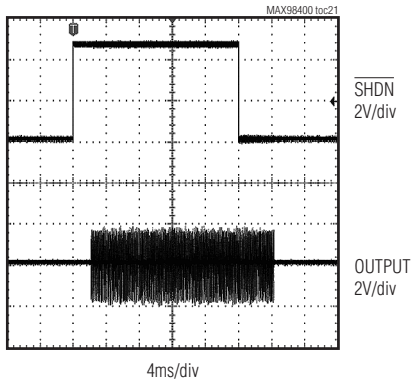

SUPPLY CURRENT vs. PVDD SUPPLY VOLTAGE

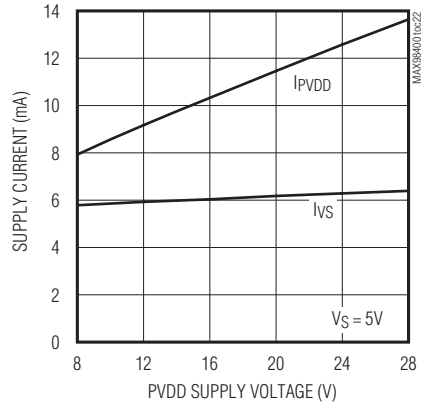

SUPPLY CURRENT vs. V_S SUPPLY VOLTAGE

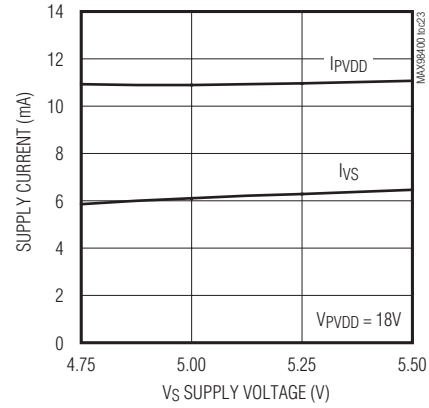

SHUTDOWN CURRENT vs. PVDD SUPPLY VOLTAGE

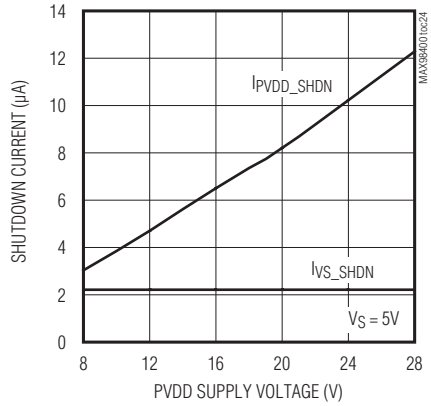

SHUTDOWN CURRENT vs. V_S SUPPLY VOLTAGE

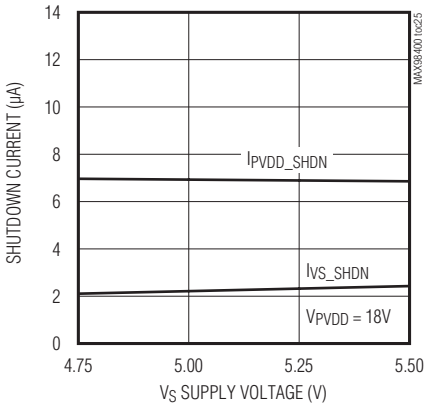

MAXIMUM OUTPUT POWER vs. PVDD (NO THERMAL SHUTDOWN)

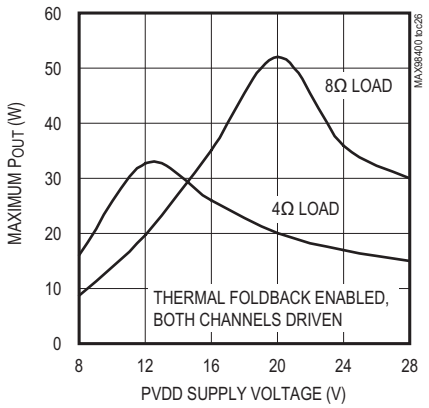

TOTAL HARMONIC DISTORTION PLUS NOISE vs. FREQUENCY (MONO)

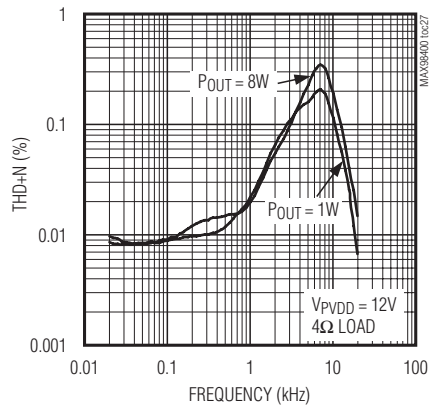

Typical Operating Characteristics (continued)

(MAX98400A, V_{PVDD} = 18V, $V_{\overline{SHDN}}$ = 5V, LIM_TH = V_S, TEMPLOCK = unconnected; G1 = GND, G2 = open (gain = 20.1dB), C_{IN} = C_{REL} = C1 = C2 = 1µF, typical values are at T_A = +25°C, unless otherwise noted.)

TOTAL HARMONIC DISTORTION PLUS NOISE vs. OUTPUT POWER (MONO)

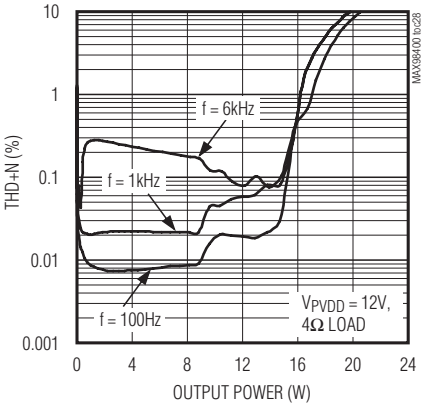

TOTAL HARMONIC DISTORTION PLUS NOISE vs. OUTPUT POWER (MONO)

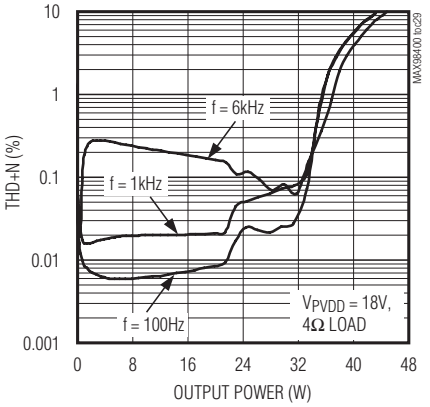

TOTAL HARMONIC DISTORTION PLUS NOISE vs. OUTPUT POWER (MONO)

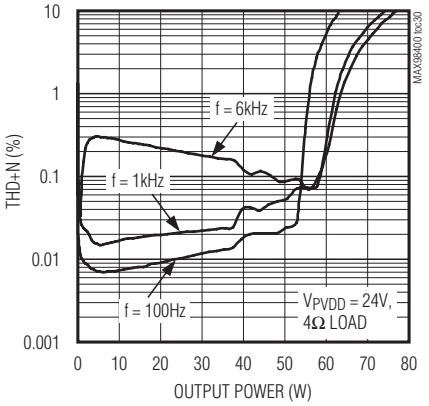

EFFICIENCY vs. OUTPUT POWER (MONO)

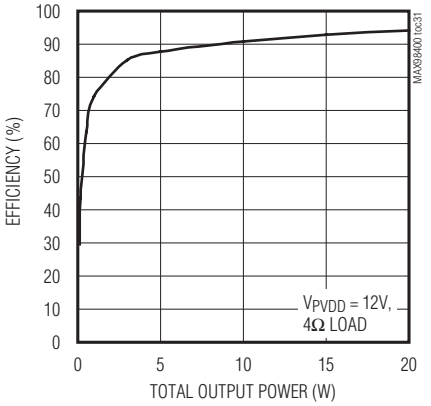

EFFICIENCY vs. OUTPUT POWER (MONO)

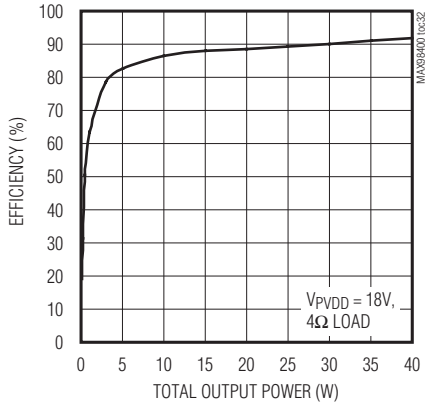

EFFICIENCY vs. OUTPUT POWER (MONO)

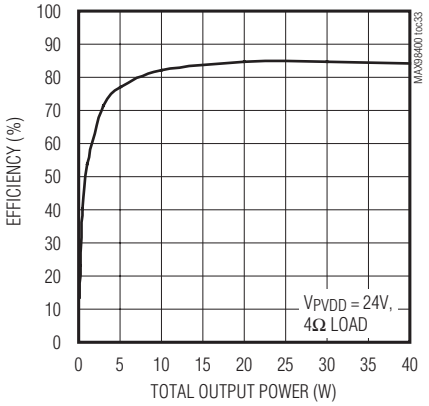

MAXIMUM OUTPUT POWER vs. PVDD (WITH THERMAL SHUTDOWN, MONO)

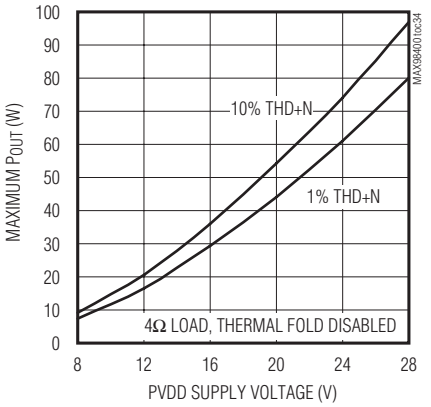

OUTPUT POWER vs. LOAD (MONO)

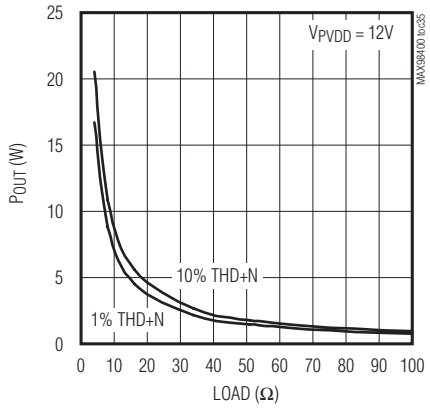

OUTPUT POWER vs. LOAD (MONO)

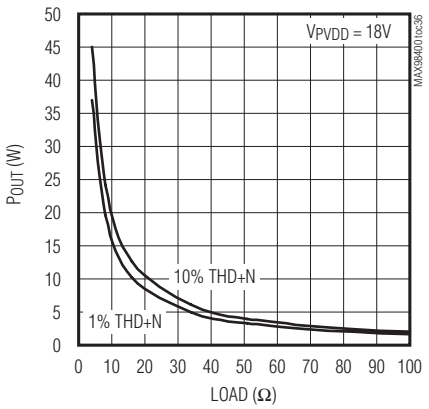

Typical Operating Characteristics (continued)

(MAX98400A, V_{PVDD} = 18V, $V_{\overline{SHDN}}$ = 5V, LIM_TH = V_S, TEMPLOCK = unconnected; G1 = GND, G2 = open (gain = 20.1dB), C_{IN} = C_{REL} = C1 = C2 = 1µF, typical values are at T_A = +25°C, unless otherwise noted.)

OUTPUT POWER vs. LOAD (MONO)

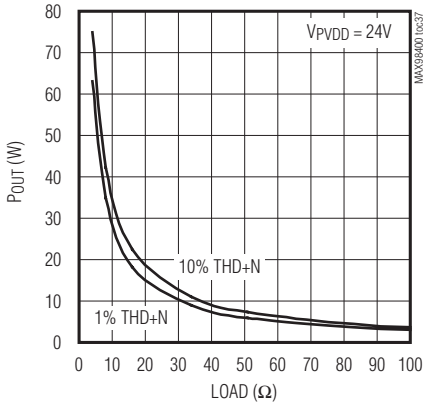

SUPPLY CURRENT vs. PVDD SUPPLY VOLTAGE (MONO)

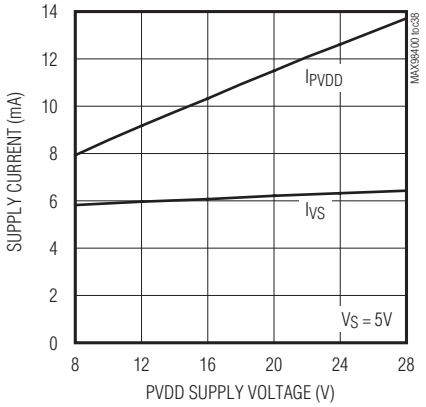

SUPPLY CURRENT vs. V_S SUPPLY VOLTAGE (MONO)

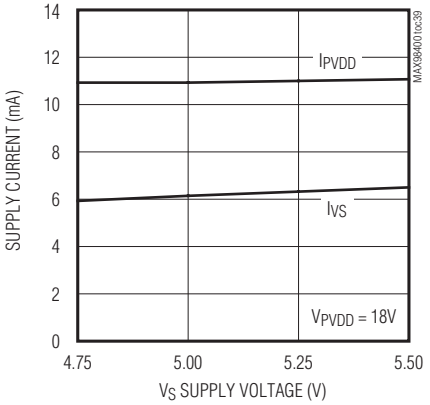

MAXIMUM OUTPUT POWER vs. PVDD (NO THERMAL SHUTDOWN, MONO)

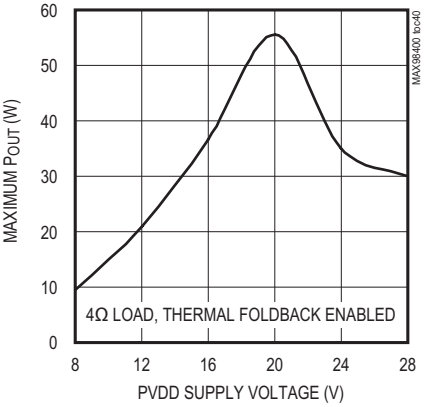

LIMITER TRANSFER CHARACTERISTIC

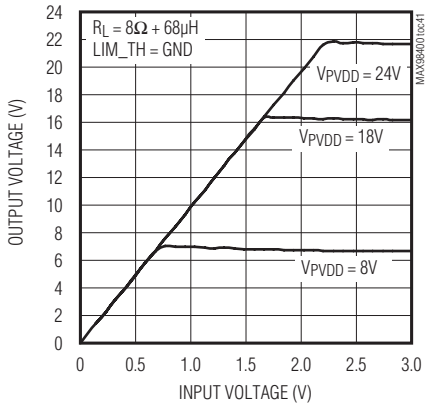

LIMITER RELEASE TIME

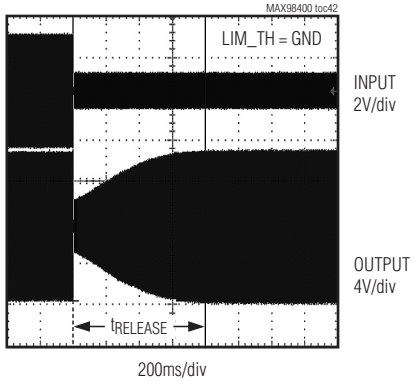

Pin Configurations

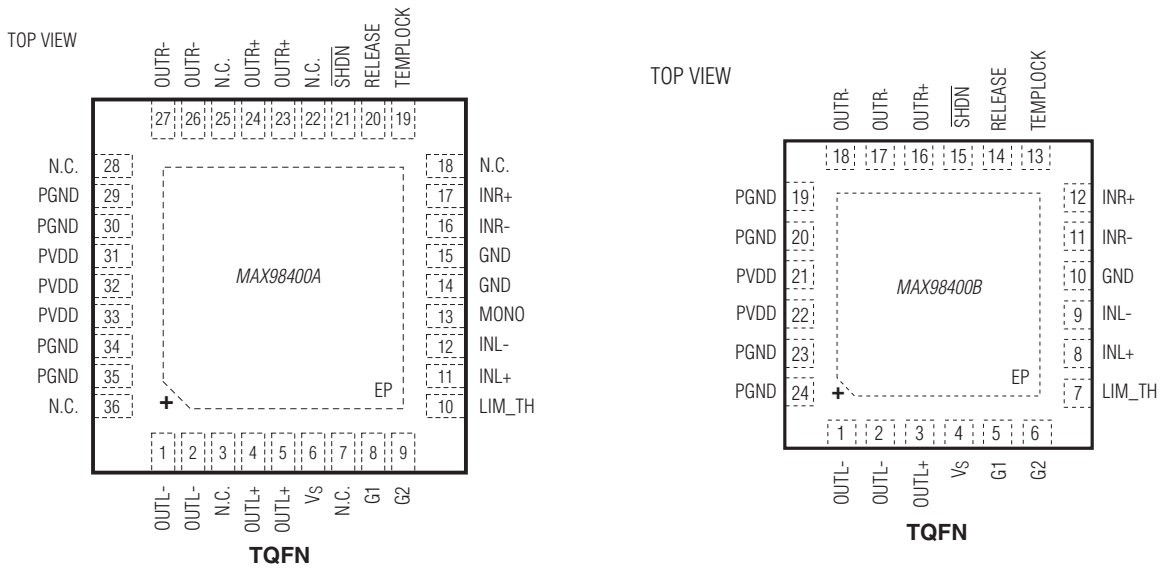

Pin Descriptions

PIN		NAME	FUNCTION
MAX98400A	MAX98400B		
1, 2	1, 2	OUTL-	Negative Left Speaker Output
3, 7, 18, 22, 25, 28, 36	—	N.C.	No Connection
4, 5	3	OUTL+	Positive Left Speaker Output
6	4	V_S	5V Regulator Supply. Bypass V_S to GND with a 1µF capacitor. Connect to a +5V source for dual-supply operation.
8	5	G1	Three-State Input for Gain Selection 1. See the Detailed Description section.
9	6	G2	Three-State Input for Gain Selection 2. See the Detailed Description section.
10	7	LIM_TH	See the Limiter Threshold Control (LIM_TH) section for details. Connect to: 1) V_S to disable limiter. 2) GND to have no clipping. 3) R_{LIM1} resistor to GND to have a PVDD tracking threshold. 4) R_{LIM1} and R_{LIM2} resistor-divider to have an absolute threshold.

Pin Descriptions (continued)

PIN		NAME	FUNCTION
MAX98400A	MAX98400B		
11	8	INL+	Left-Channel Positive Analog Input
12	9	INL-	Left-Channel Negative Analog Input
13	—	MONO	Mono Operation. Connect MONO to GND for stereo operation. Connect MONO to V_S for mono operation.
14, 15	10	GND	Analog Ground
16	11	INR-	Right-Channel Negative Analog Input
17	12	INR+	Right-Channel Positive Analog Input
19	13	TEMPLOCK	See the Thermal Foldback section for details. Connect to: 1) GND to disable thermal foldback. 2) Leave open to enable thermal foldback.
20	14	RELEASE	Sets the Limiter Time Constant. Connect to GND through 1µF.
21	15	$\overline{SHDN}$	Active-Low Shutdown Input Low = shutdown High = enable
23, 24	16	OUTR+	Positive Right Speaker Output
26, 27	17, 18	OUTR-	Negative Right Speaker Output
29, 30, 34, 35	19, 20, 23, 24	PGND	Power Ground
31, 32, 33	21, 22	PVDD	Power Supply. Bypass PVDD to PGND with 1µF and 200µF capacitors.
—	—	EP	Exposed Pad. Connect to PGND for optimum thermal performance.

Stereo Configuration for MAX98400A

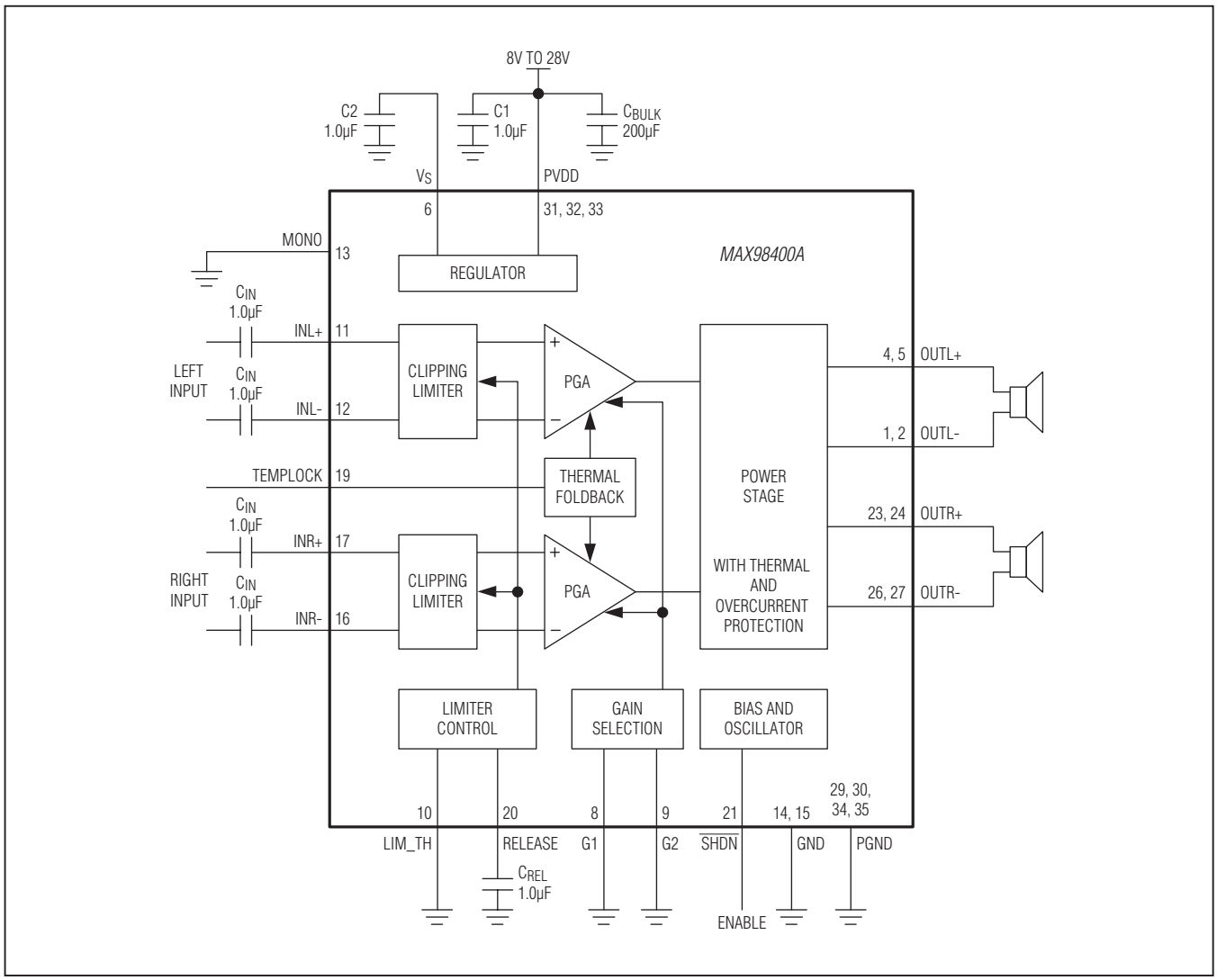

Mono Configuration for MAX98400A

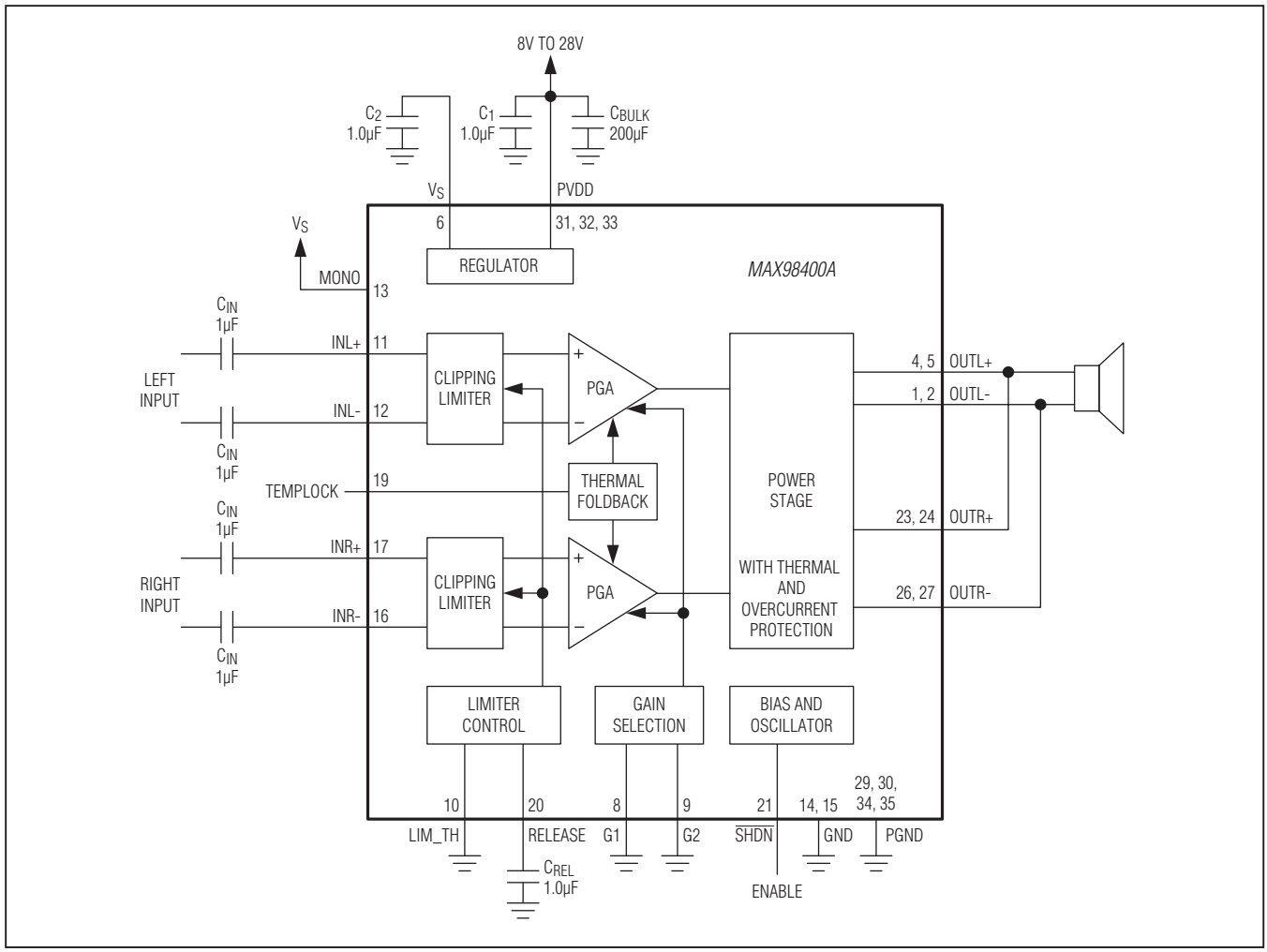

Detailed Description

The MAX98400A/MAX98400B Class D amplifiers provide high-performance, thermally efficient amplifier solutions. The MAX98400A delivers 2x20W into 8Ω loads or 1x40W into a 4Ω load. The MAX98400B delivers 2x12W into 8Ω loads.

An integrated limiting circuit prevents output clipping distortion and protects small speakers from transient voltages.

A thermal-foldback feature can be enabled to automatically reduce the output power if the supply voltage, input signal, and/or ambient temperature are too high to operate within a junction temperature of +130°C. Traditional thermal protection is also available in addition to robust overcurrent protection.

Both devices operate from an 8V to 28V supply and provide a high 67dB PSRR, eliminating the need for a regulated power supply. They offers up to 90% efficiency from a 12V supply.

Filterless modulation allows the ICs to pass EN55022B EMI limits with 1m cables using only a low-cost ferrite bead and small-value capacitor on each output (Figure 1).

Comprehensive click-and-pop reduction circuitry minimizes noise coming into and out of shutdown.

The MAX98400A/MAX98400B are available in 36-pin and 24-pin TQFN packages, respectively, and are specified over the -40°C to +85°C temperature range.

Efficiency

The high efficiency of a Class D amplifier is due to the switching operation of the output stage transistors. In a Class D amplifier, the output transistors act as switches and consume negligible power. Power loss associated with the Class D output stage is due to the I^2R loss of the MOSFET on-resistance, various switching losses, and quiescent current overhead.

The theoretical best efficiency of a linear amplifier is 78% at peak output power. Under typical music reproduction levels, the efficiency falls below 30%, whereas these ICs exhibit > 85% efficiency under the same conditions (Figure 2).

Shutdown

The ICs feature a shutdown mode that reduces power consumption and extends battery life in portable applications. The shutdown mode reduces supply current to 8µA (typ). Drive $\overline{SHDN}$ high for normal operation. Drive $\overline{SHDN}$ low to place the device in low-power shutdown mode. In shutdown mode, the outputs are high impedance and the common-mode voltage at the output decays to zero. The shutdown mode serves as a mute function.

Click-and-Pop Suppression

The ICs feature comprehensive click-and-pop suppression that minimizes audible transients on startup and shutdown. While in shutdown, the H-bridge is in a high-impedance state.

Mono Configuration

The MAX98400A features a mono mode that allows the right and left channels to operate in parallel, achieving up to 40W of output power. Apply a logic-high (V_S) to MONO to enable mono mode. In mono mode, an audio signal applied to the left channel (INL) is routed to the H-bridges of both channels. Connect OUTL+ to OUTR+ and OUTL- to OUTR- using heavy PCB traces as close as possible to the device. Driving MONO low (stereo mode) while the outputs are wired together in mono mode can trigger the short-circuit or thermal-overload protection, or both.

Clipping Limiter

The ICs feature a programmable clipping limiter to prevent output clipping distortion and excessive power dissipation and to protect small speakers. All limiter functionality is controlled by two pins: LIM_TH and RELEASE. The voltage applied at the LIM_TH pin controls the threshold when the limiter acts, and the capacitor at the RELEASE pin controls the release time of the limiter. The limiter controls both left and right channels together.

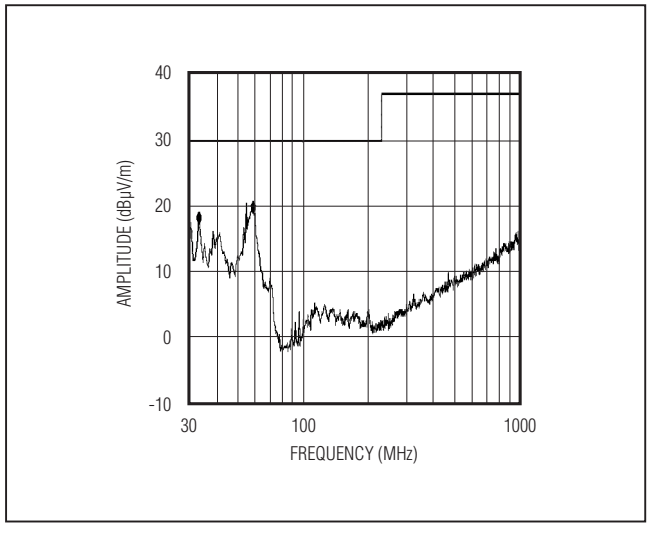

Figure 1. MAX98400B EMI Performance

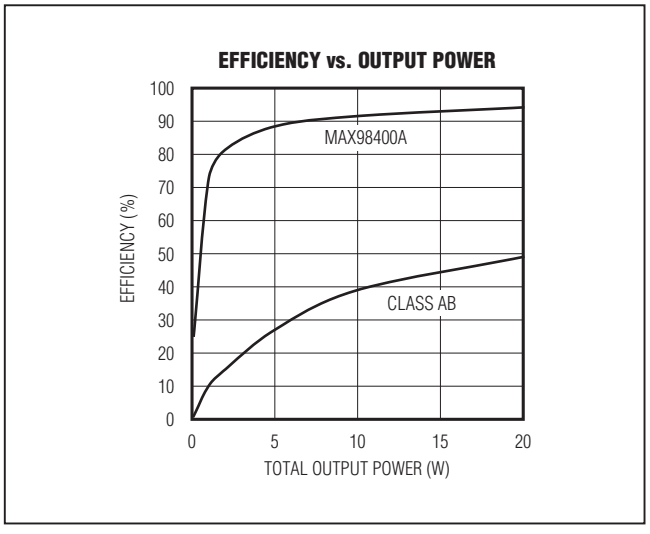

Figure 2. MAX98400A Efficiency vs. Class AB Efficiency

Limiter Threshold Control (LIM_TH)

There are three modes for the limiter, defined by V_{LIM_TH}, the voltage applied to the LIM_TH pin (Table 1).

In Mode1, the limiter is disabled. The output clips when output peak voltage reaches the voltage on PVDD, V_{PVDD}.

In Mode2, the limiter threshold (V_{THRESH}) tracks supply voltage, V_{PVDD}. The peak output voltage is limited to approximately $V_{THRESH} = V_{PVDD} \times 0.95$.

In Mode3, the limiter threshold, V_{THRESH}, is programmable. V_{LIM_TH} can be set to a voltage proportional to the desired output threshold. The limiter threshold can be set down to 0.5 x V_{PVDD} and up to 1.6 x V_{PVDD}. V_{THRESH} cannot exceed 22V.

Threshold settings below V_{PVDD} can be used to protect speakers; the peak output voltage is limited to a value of $V_{THRESH} = V_{LIM_TH} \times 6.4$.

Threshold settings above V_{PVDD} can be used to limit the output distortion; the peak output voltage is limited to a value of $V_{THRESH} = V_{LIM_TH} \times 6.4 \times 0.95$. The 0.95 factor takes into account the voltage drop across the power FET that occurs when the amplifier is clipped. Choose R_{LIM1} and R_{LIM2} (Figure 3) to set the desired voltage at the LIM_TH pin. For best accuracy, the parallel combination $R_{LIM1}||R_{LIM2}$ should be approximately 100kΩ.

Example:

If the speaker in the application can handle only 12V peak, but V_{PVDD} is higher, the threshold voltage (V_{THRESH}) should be set to 12V:

$$V_{THRESH} = 12V$$

The voltage that needs to be applied to V_{LIM_TH} is then defined as:

$$V_{LIM_TH} = V_{THRESH}/6.4 = 12V/6.4 = 1.88V$$

For a 5V supply, a resistor-divider of R_{LIM1} = 165kΩ/ R_{LIM2} = 270kΩ gives both an unloaded voltage of 1.82V and the desired output resistance of approximately 100kΩ.

If only distortion limiting is desired, set V_{THRESH} to be 20% higher than V_{PVDD}. This limits the output clipping levels to approximately 10% THD.

The attack time for the limiter is fixed, typically < 200µs.

Release Time Control (RELEASE)

The release time for the limiter is set by an external capacitor at RELEASE (C_{REL}) to GND. Choose C_{REL} = Release Time [s] x 1µF. The C_{REL} limit is 2.2µF.

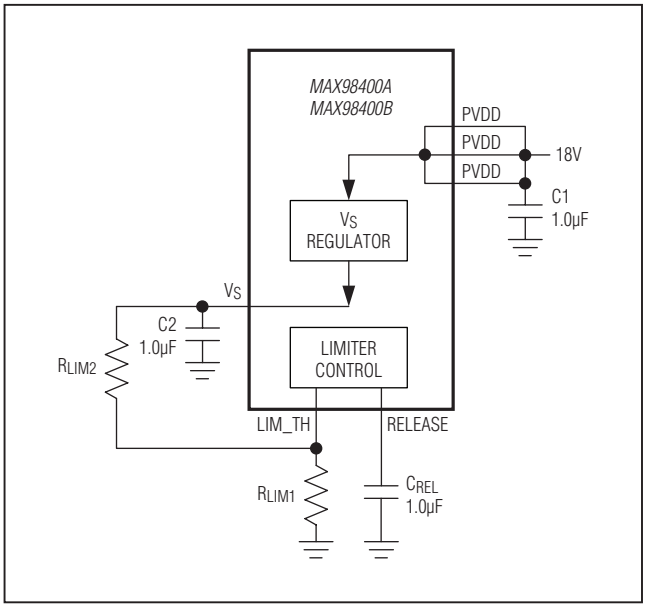

Figure 3. Limiter Control, Mode3 Configuration (Table 1)

Table 1. Limiter Control Modes

MODE	NAME	FUNCTION	LIM_TH VOLTAGE RANGE
Mode1	Disable	The limiter is disabled when connecting LIM_TH to V_S or a voltage greater than 3.9V.	3.9V < $V_{LIM_TH} \le V_S$
Mode2	PVDD tracking	The output peak voltage is limited to just below the supply voltage, V_{PVDD}. $V_{THRESH} = V_{PVDD} \times 0.95$ when LIM_TH is connected to ground or a voltage below 0.3V.	$V_{GND} \le V_{LIM_TH}$ < 0.15V
Mode3	Programmable	The output peak voltage, V_{THRESH}, is limited to the threshold set by the voltage applied on the LIM_TH so that $V_{THRESH} = V_{LIM_TH} \times 6.4$. When V_{THRESH} is set 20% higher than V_{PVDD}, the output THD distortion is limited to 10%.	0.6V ≤ $V_{LIM_TH} \le$ 3.8V

Note: V_{THRESH} is the output peak limiting voltage (limiter threshold voltage).

Preamplifier Gain Setting

The ICs offer eight pin-selectable gain settings, selectable through the G1 and G2 pins.

Protection

The ICs feature overcurrent protection and two types of thermal protection: thermal foldback and overtemperature protection.

Thermal Foldback

The ICs feature thermal foldback that helps prevent unwanted thermal-shutdown events. If activated, thermal foldback attenuates the stereo output signal once the internal junction temperature exceeds +130°C. Attenuation is applied proportionally as the junction temperature (T_J) exceeds the fixed +130°C threshold. The thermal-foldback mode is controlled by the TEMPLOCK pin.

Overtemperature Protection

The ICs feature an overtemperature protection that disables the amplifier if the junction temperature exceeds +165°C. Once the amplifier is disabled and the die temperature has cooled by 20°C, the devices enable again and resume normal operation.

Overcurrent Protection

When the output current reaches the current limit, 5A (typ), the ICs disable the outputs and initiate a recovering sequence. The shutdown and recovering sequence is repeated until the output fault is removed.

Applications Information

Filterless Class D Operation

Traditional Class D amplifiers require an output filter to recover the audio signal from the amplifier's output. The filters add cost, increase the solution size of the amplifier, and can decrease efficiency and THD+N performance. The traditional PWM scheme uses large differential output swings (2 x V_{DD} peak-to-peak) and causes large ripple currents. Any parasitic resistance in the filter components results in a loss of power, lowering the efficiency.

These ICs do not require an output filter. The devices rely on the inherent inductance of the speaker coil and the natural filtering of both the speaker and the human ear to recover the audio component of the square-wave output. Eliminating the output filter results in a smaller, lower cost solution.

Because the frequency of the ICs' output is well beyond the bandwidth of most speakers, voice coil movement due to the square-wave frequency is very small. For optimum results, use a speaker with a series inductance > 10µH. Typical 8Ω speakers exhibit series inductances in the 20µH to 100µH range.

Table 2. Gain Selection

G1	G2	GAIN SETTING (dB)
GND	GND	9
Unconnected	GND	13
V_S	GND	16.7
GND	Unconnected	20.1
Unconnected	Unconnected	23.3
V_S	Unconnected	26.4
GND	V_S	29.8
Unconnected	V_S	32.9
V_S	V_S	Reserved

Inductor-Based Output Filters

Some applications use the ICs with a full inductor-/capacitor-based (L/C) output filter. See Figure 4 for the correct connections of these components.

The load impedance of the speaker determines the filter component selection (Table 3).

Inductors L1 and L2 and capacitor C1 form the primary output filter. Capacitors C2 and C3 provide common-mode filtering to reduce radiated emissions. Capacitors C4 and C5, plus resistors R1 and R2, form a Zobel at the output. A Zobel corrects the output loading to compensate for the rising impedance of the loudspeaker. Without a Zobel, the filter exhibits a peak response near the cutoff frequency.

Component Selection

Input Capacitor

The input AC-coupling capacitors allow the amplifier to automatically bias the signal to an optimum DC level. 1µF is recommended for the input capacitor.

Power Supplies

The ICs are designed to be operated from a single-supply voltage, V_{PVDD}, which can range from 8V to 28V. Inside the ICs, this V_{PVDD} supplies power for the output FETs and other high-power circuitry, while the low-power circuitry operates from V_S, an internally generated 5V supply (4.6V typ). V_S is internally generated from a linear regulator that is powered from V_{PVDD}. Bypass both PVDD and V_S pins to ground with a 1µF capacitor.

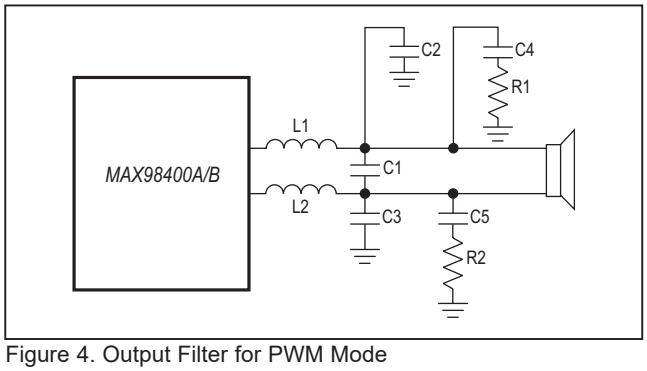

Figure 4. Output Filter for PWM Mode

Internal Regulator V_S

For highest efficiency operation and best thermal performance, especially at higher V_{PVDD} levels, the V_S can be supplied from an external 5V supply. To do this, connect a 5V source to the V_S pin (4.75V to 5.5V). When a 5V supply is connected to the V_S pin, the internal regulator is automatically disabled and the power dissipation of the ICs is reduced.

Supply Bypassing, Layout, and Grounding

Proper layout and grounding are essential for optimum performance. Use wide traces for the power-supply inputs and amplifier outputs to minimize losses due to parasitic trace resistance. Proper grounding improves audio performance, minimizes crosstalk between channels, and prevents switching noise from coupling into the audio signal. Connect PGND and GND together at a single point on the PCB. Route all traces that carry switching transients away from GND and the traces/components in the audio signal path.

Bypass each PVDD pin with a 0.1µF capacitor to PGND. Place the bypass capacitors as close as possible to the ICs. Place a 220µF capacitor between PVDD and PGND. Bypass both PVDD and V_S pins with a 1µF capacitor to GND.

Use wide, low-resistance output traces. Current drawn from the outputs increases as load impedance decreases. High-output trace resistance decreases the power delivered to the load. The TQFN package features an exposed thermal pad on its underside. This pad lowers the package's thermal resistance by providing a heat conduction path from the die to the PCB. Connect the exposed thermal pad to PGND by using a large pad and multiple vias to the PGND plane.

For best optimum thermal performance, use 2oz copper and allow lots of PCB area around the device.

Chip Information

PROCESS: CMOS

Table 3. Filter Component Selection

R_L (Ω)	L1, L2 (µH)	C1 (µF)	C2, C3 (µF)	C4, C5 (µF)	R1, R2 (Ω)
4	10	0.47	0.10	0.22	10
8	15	0.15	0.15	0.15	15
16	33	0.10	0.10	0.10	33

Functional Diagrams

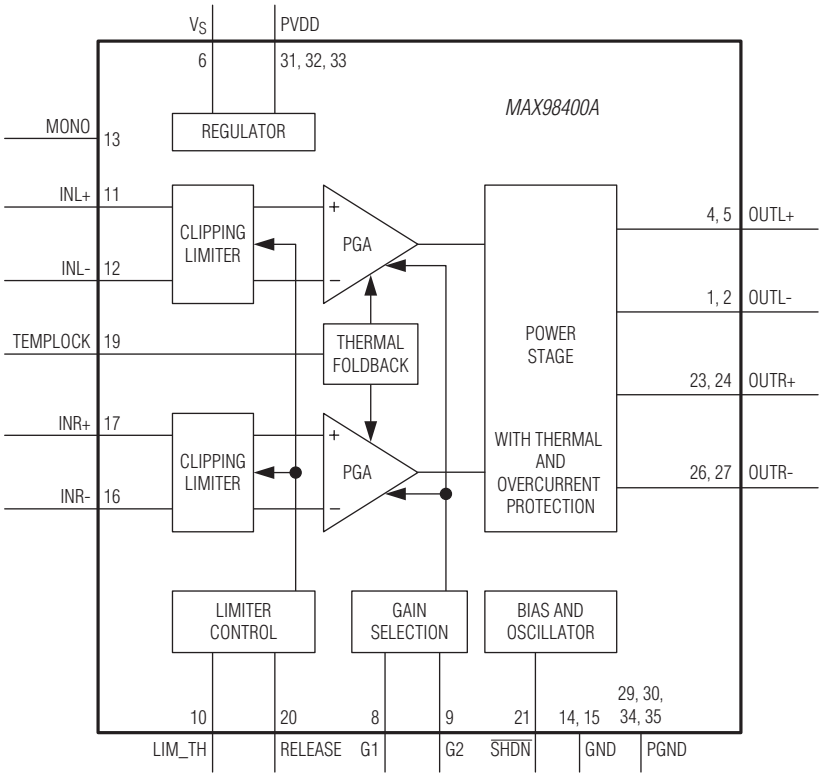

Functional Diagrams (continued)

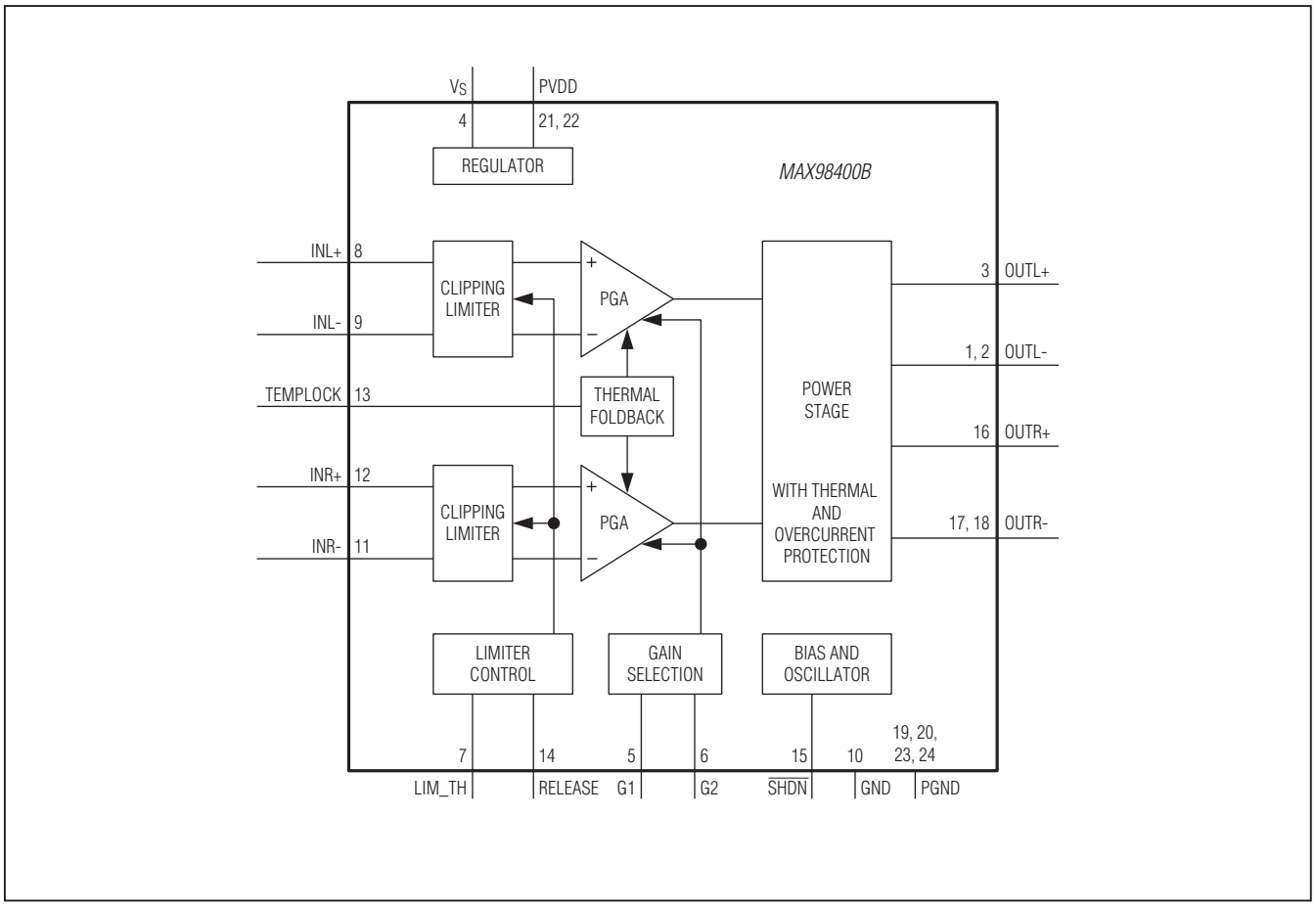

Ordering Information

PART	PIN-PACKAGE	SPEC
MAX98400AETX+	36 TQFN-EP*	2x20W
MAX98400BETG+	24 TQFN-EP*	2x12W

Note: *Devices operate over the -40°C to +85°C temperature range.*

**EP = Exposed pad.*

Package Information

For the latest package outline information and land patterns, go to **www.maximintegrated.com/packages**. Note that a "+", "#", or "-" in the package code indicates RoHS status only. Package drawings may show a different suffix character, but the drawing pertains to the package regardless of RoHS status.

PACKAGE TYPE	PACKAGE CODE	OUTLINE NO.	LAND PATTERN NO.
36 TQFN-EP	T3666+3	21-0141	90-0050
24 TQFN-EP	T2444+4	21-0139	90-0022

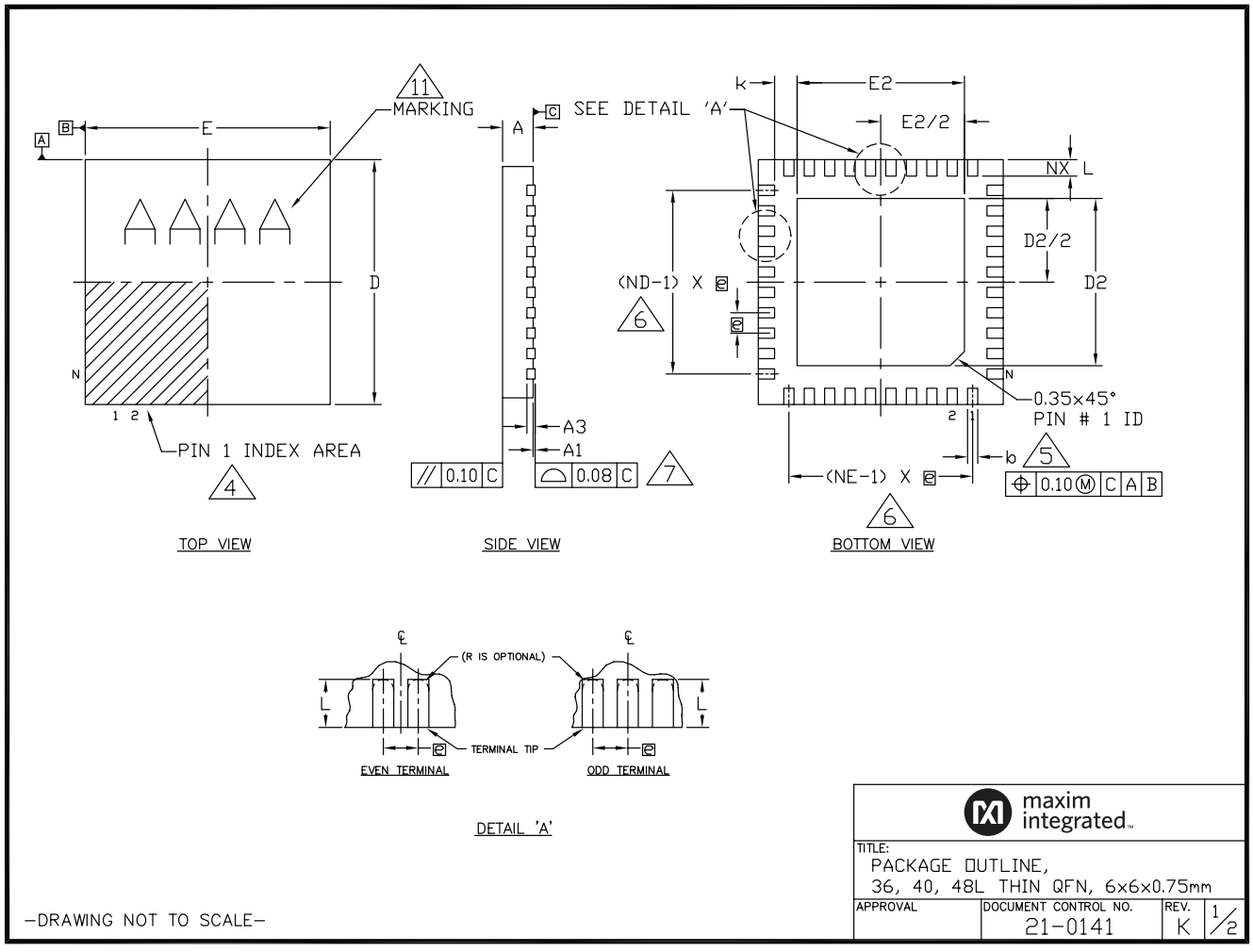

Package Information (continued)

For the latest package outline information and land patterns, go to **www.maximintegrated.com/packages**. Note that a "+", "#", or "-" in the package code indicates RoHS status only. Package drawings may show a different suffix character, but the drawing pertains to the package regardless of RoHS status.

COMMON DIMENSIONS									
PKG.	36L 6x6			40L 6x6			48L 6x6		
SYMBOL	MIN.	NOM.	MAX.	MIN.	NOM.	MAX.	MIN.	NOM.	MAX.
A	0.70	0.75	0.80	0.70	0.75	0.80	0.70	0.75	0.80
A1	0	0.02	0.05	0	0.02	0.05	0	–	0.05
A3	0.20 REF.			0.20 REF.			0.20 REF.		
b	0.20	0.25	0.30	0.20	0.25	0.30	0.15	0.20	0.25
D	5.90	6.00	6.10	5.90	6.00	6.10	5.90	6.00	6.10
E	5.90	6.00	6.10	5.90	6.00	6.10	5.90	6.00	6.10
e	0.50 BSC.			0.50 BSC.			0.40 BSC.		
k	0.25	–	–	0.25	–	–	0.25	–	–
L	0.35	0.50	0.65	0.30	0.40	0.50	0.30	0.40	0.50
N	36			40			48		
ND	9			10			12		
NE	9			10			12		
JEDEC	WJJD-1			WJJD-2			–		

EXPOSED PAD VARIATIONS						
PKG. CODES	D2			E2		
	MIN.	NOM.	MAX.	MIN.	NOM.	MAX.
T3666-2	3.60	3.70	3.80	3.60	3.70	3.80
T3666-3	3.60	3.70	3.80	3.60	3.70	3.80
T3666N-1	3.60	3.70	3.80	3.60	3.70	3.80
T3666MN-1	3.60	3.70	3.80	3.60	3.70	3.80
T4066-2	4.00	4.10	4.20	4.00	4.10	4.20
T4066-3	4.00	4.10	4.20	4.00	4.10	4.20
T4066-5	4.00	4.10	4.20	4.00	4.10	4.20
T4866-1	4.40	4.50	4.60	4.40	4.50	4.60
T4866N-1	4.40	4.50	4.60	4.40	4.50	4.60
T4866-2	4.40	4.50	4.60	4.40	4.50	4.60
T4066MN-5	4.00	4.10	4.20	4.00	4.10	4.20

NOTES:
1. ALL DIMENSIONS ARE IN MILLIMETERS, ANGLES IN DEGREES UNLESS OTHERWISE SPECIFIED
2. DIMENSIONING & TOLERANCING CONFORM TO ASME Y14.5M-1994.
3. MATERIAL MUST COMPLY WITH BANNED AND RESTRICTED SUBSTANCES SPEC # 10-0131.
4. THE TERMINAL #1 IDENTIFIER AND TERMINAL NUMBERING CONVENTION SHALL CONFORM TO JESD 95-1 SPP-012. DETAILS OF TERMINAL #1 IDENTIFIER ARE OPTIONAL, BUT MUST BE LOCATED WITHIN THE ZONE INDICATED. THE TERMINAL #1 IDENTIFIER MAY BE EITHER A MOLD OR MARKED FEATURE.
5. DIMENSION b APPLIES TO METALLIZED TERMINAL AND IS MEASURED BETWEEN 0.25mm AND 0.30mm FROM TERMINAL TIP.
6. ND AND NE REFER TO THE NUMBER OF TERMINALS ON EACH D AND E SIDE, RESPECTIVELY.
7. COPLANARITY APPLIES TO THE EXPOSED HEAT SINK SLUG AS WELL AS THE TERMINALS.
8. DRAWING CONFORMS TO JEDEC MO220, EXCEPT FOR 0.4mm LEAD PITCH: PACKAGE T4866.
9. N IS THE TOTAL NUMBER OF TERMINALS.
10. WARPAGE SHALL NOT EXCEED 0.10mm.
11. MARKING IS FOR PACKAGE ORIENTATION PURPOSE ONLY.
12. NUMBER OF LEADS SHOWN FOR REFERENCE ONLY.
13. ALL DIMENSIONS APPLY TO BOTH LEADED (-) AND PbFREE (+) PKG. CODES.

-DRAWING NOT TO SCALE-

maxim integrated

TITLE:
PACKAGE OUTLINE,
36, 40, 48L THIN QFN, 6x6x0.75mm

APPROVAL	DOCUMENT CONTROL NO.	REV.	
	21-0141	K	2/2

Package Information (continued)

For the latest package outline information and land patterns, go to **www.maximintegrated.com/packages**. Note that a "+", "#", or "-" in the package code indicates RoHS status only. Package drawings may show a different suffix character, but the drawing pertains to the package regardless of RoHS status.

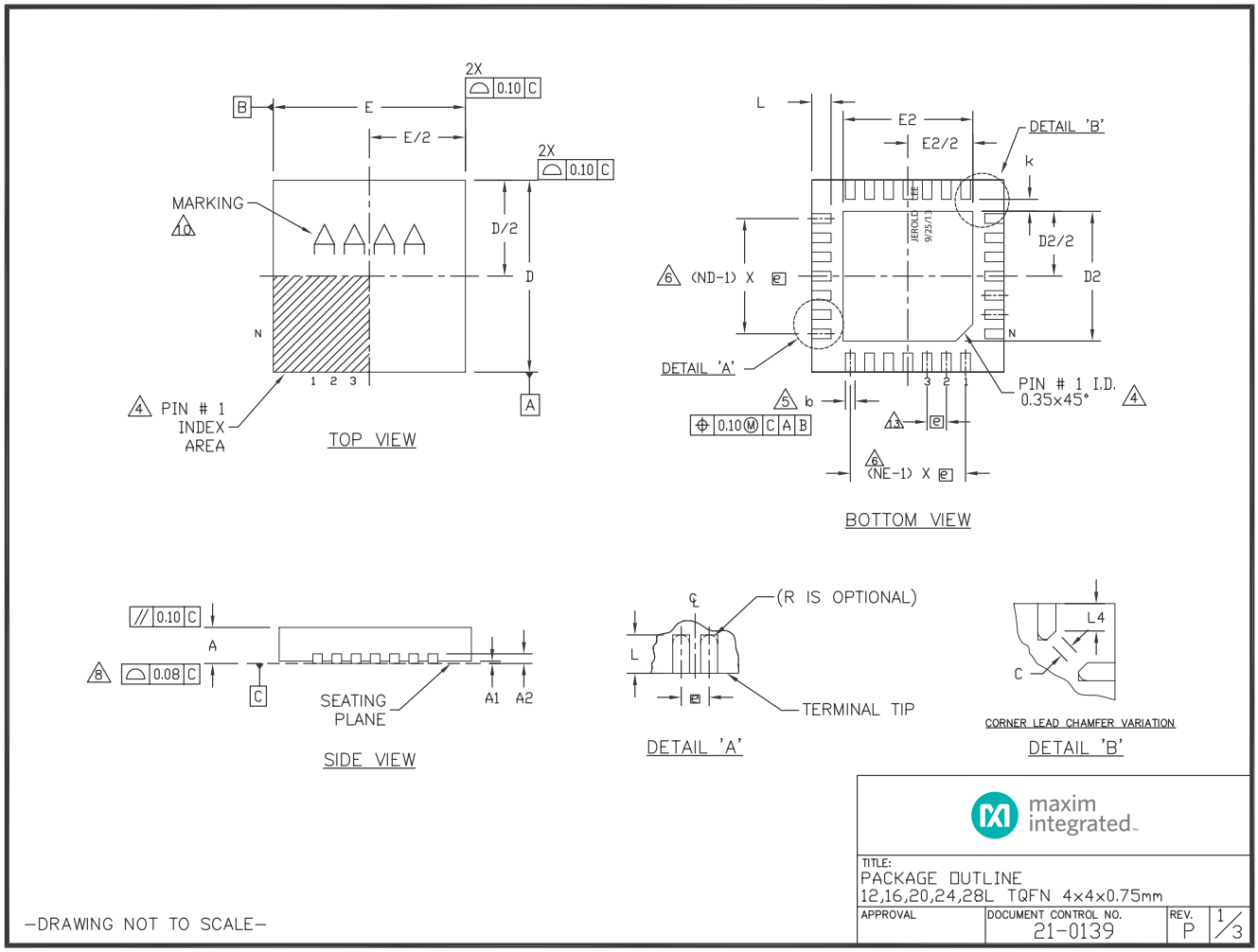

Package Information (continued)

For the latest package outline information and land patterns, go to **www.maximintegrated.com/packages**. Note that a "+", "#", or "-" in the package code indicates RoHS status only. Package drawings may show a different suffix character, but the drawing pertains to the package regardless of RoHS status.

COMMON DIMENSIONS

PKG	12L 4x4			16L 4x4			20L 4x4			24L 4x4			28L 4x4		
REF.	MIN.	NOM.	MAX.	MIN.	NOM.	MAX.	MIN.	NOM.	MAX.	MIN.	NOM.	MAX.	MIN.	NOM.	MAX.
A	0.70	0.75	0.80	0.70	0.75	0.80	0.70	0.75	0.80	0.70	0.75	0.80	0.70	0.75	0.80
A1	0.0	0.02	0.05	0.0	0.02	0.05	0.0	0.02	0.05	0.0	0.02	0.05	0.0	0.02	0.05
A2	0.20 REF			0.20 REF			0.20 REF			0.20 REF			0.20 REF		
b	0.25	0.30	0.35	0.25	0.30	0.35	0.20	0.25	0.30	0.18	0.23	0.30	0.15	0.20	0.25
D	3.90	4.00	4.10	3.90	4.00	4.10	3.90	4.00	4.10	3.90	4.00	4.10	3.90	4.00	4.10
E	3.90	4.00	4.10	3.90	4.00	4.10	3.90	4.00	4.10	3.90	4.00	4.10	3.90	4.00	4.10
e	0.80 BSC.			0.65 BSC.			0.50 BSC.			0.50 BSC.			0.40 BSC.		
k	0.25	–	–	0.25	–	–	0.25	–	–	0.25	–	–	0.25	–	–
L	0.45	0.55	0.65	0.45	0.55	0.65	0.45	0.55	0.65	0.30	0.40	0.50	0.30	0.40	0.50
N	12			16			20			24			28		
ND	3			4			5			6			7		
NE	3			4			5			6			7		
Jedec Var.	WGGB			WGGC			WGGD-1			WGGD-2			WGGE		

DIMENSION VARIATIONS

PKG. CODE	D2			E2			L			R (LEAD TIP RADIUS)
	MIN.	NOM.	MAX.	MIN.	NOM.	MAX.	MIN.	NOM.	MAX.	
T2044-4	2.85	2.90	2.95	2.85	2.90	2.95	0.25	0.30	0.35	0.125 REF
T2044-5	2.60	2.70	2.80	2.60	2.70	2.80	0.35	0.40	0.45	0.203 REF

EXPOSED PAD VARIATIONS

PKG. CODES	D2			E2		
	MIN.	NOM.	MAX.	MIN.	NOM.	MAX.
T1244-3	1.95	2.10	2.25	1.95	2.10	2.25
T1244-4	1.95	2.10	2.25	1.95	2.10	2.25
T1644-3	1.95	2.10	2.25	1.95	2.10	2.25
T1644-4	1.95	2.10	2.25	1.95	2.10	2.25
T2044-2	1.95	2.10	2.25	1.95	2.10	2.25
T2044-3	1.95	2.10	2.25	1.95	2.10	2.25
T2444-2	1.95	2.10	2.25	1.95	2.10	2.25
T2444-3	2.45	2.60	2.63	2.45	2.60	2.63
T2444-4	2.45	2.60	2.63	2.45	2.60	2.63
T2444-4C	2.45	2.60	2.63	2.45	2.60	2.63
T2444N-4	2.45	2.60	2.63	2.45	2.60	2.63
T2444M-1	2.45	2.60	2.63	2.45	2.60	2.63
T2444MK-1	2.45	2.60	2.63	2.45	2.60	2.63
T2844-1	2.50	2.60	2.70	2.50	2.60	2.70
T2844-1C	2.50	2.60	2.70	2.50	2.60	2.70
T2844N-1	2.65	2.70	2.75	2.65	2.70	2.75

CORNER LEAD CHAMFER VARIATION

PKG. CODES	C	L4
T2444-2	0.120 X 45° REF	0.31 REF
T2444-3	0.120 X 45° REF	0.31 REF
T2444-4	0.120 X 45° REF	0.31 REF
T2444-4C	0.120 X 45° REF	0.31 REF
T2444M-1	0.120 X 45° REF	0.31 REF
T2444MK-1	0.120 X 45° REF	0.31 REF
T2444N-4	0.120 X 45° REF	0.31 REF

maxim integrated

TITLE:
PACKAGE OUTLINE
12,16,20,24,28L TQFN 4x4x0.75mm

APPROVAL	DOCUMENT CONTROL NO.	REV.	
	21-0139	N	2/3

–DRAWING NOT TO SCALE–

Package Information (continued)

For the latest package outline information and land patterns, go to **www.maximintegrated.com/packages**. Note that a "+", "#", or "-" in the package code indicates RoHS status only. Package drawings may show a different suffix character, but the drawing pertains to the package regardless of RoHS status.

NOTES:

1. DIMENSIONING & TOLERANCING CONFORM TO ASME Y14.5M-1994.
2. ALL DIMENSIONS ARE IN MILLIMETERS. ANGLES ARE IN DEGREES.
3. N IS THE TOTAL NUMBER OF TERMINALS.
4. THE TERMINAL #1 IDENTIFIER AND TERMINAL NUMBERING CONVENTION SHALL CONFORM TO JESD 95-1 SPP-012. DETAILS OF TERMINAL #1 IDENTIFIER ARE OPTIONAL, BUT MUST BE LOCATED WITHIN THE ZONE INDICATED. THE TERMINAL #1 IDENTIFIER MAY BE EITHER A MOLD OR MARKED FEATURE.
5. DIMENSION b APPLIES TO METALLIZED TERMINAL AND IS MEASURED BETWEEN 0.25mm AND 0.30mm FROM TERMINAL TIP.
6. ND AND NE REFER TO THE NUMBER OF TERMINALS ON EACH D AND E SIDE RESPECTIVELY.
7. DEPOPULATION IS POSSIBLE IN A SYMMETRICAL FASHION.
8. COPLANARITY APPLIES TO THE EXPOSED HEAT SINK SLUG AS WELL AS THE TERMINALS.
9. DRAWING CONFORMS TO JEDEC MO220, EXCEPT FOR T2444-3, T2444-4 AND T2844-1.
10. MARKING IS FOR PACKAGE ORIENTATION REFERENCE ONLY.
11. COPLANARITY SHALL NOT EXCEED 0.08mm.
12. WARPAGE SHALL NOT EXCEED 0.10mm.
13. LEAD CENTERLINES TO BE AT TRUE POSITION AS DEFINED BY BASIC DIMENSION 'e', ±0.05.
14. NUMBER OF LEADS SHOWN ARE FOR REFERENCE ONLY.
15. MATERIAL MUST COMPLY WITH BANNED AND RESTRICTED SUBSTANCES SPEC # 10-0131.
16. ALL DIMENSIONS ARE THE SAME FOR LEADED (-) & PbFREE (+) PACKAGE CODES.

-DRAWING NOT TO SCALE-

maxim integrated

TITLE: PACKAGE OUTLINE 12,16,20,24,28L TQFN 4x4x0.75mm			
APPROVAL	DOCUMENT CONTROL NO. 21-0139	REV. N	3/3

Revision History

REVISION NUMBER	REVISION DATE	DESCRIPTION	PAGES CHANGED
0	6/10	Initial release	—
1	4/15	Corrected Land Pattern numbers	22
2	8/20	Updated *Package Information* table	22
3	10/20	Corrected TOCs 26 and 40	9, 11

For pricing, delivery, and ordering information, please visit Maxim Integrated's online storefront at https://www.maximintegrated.com/en/storefront/storefront.html.

Maxim Integrated cannot assume responsibility for use of any circuitry other than circuitry entirely embodied in a Maxim Integrated product. No circuit patent licenses are implied. Maxim Integrated reserves the right to change the circuitry and specifications without notice at any time. The parametric values (min and max limits) shown in the Electrical Characteristics table are guaranteed. Other parametric values quoted in this data sheet are provided for guidance.

Maxim Integrated and the Maxim Integrated logo are trademarks of Maxim Integrated Products, Inc. © 2020 Maxim Integrated Products, Inc.