19-5081; Rev 0; 12/09

MAX9860 Evaluation Kit

Evaluates: MAX9860

General Description

The MAX9860 evaluation kit (EV kit) consists of a MAX9860 evaluation board and software. The EV kit is a fully assembled and tested circuit board that evaluates the MAX9860 low-power, voiceband, mono audio codec. The EV kit is designed to send and receive digital audio data in the Sony/Philips digital interface (S/PDIF) format and can be optionally configured to communicate using generic digital audio or I²S-compatible signals. The EV kit provides fiber optic receiving and transmitting modules for digital audio input and output.

The EV kit includes Windows® 2000-, Windows XP®-, and Windows Vista®-compatible software that provides a graphical user interface (GUI) for exercising the features of the MAX9860. The EV kit is connected to a PC through a USB A-to-B cable.

Features

- **USB-PC Connection (Cable Included)**
- **USB Powered (External Power Supply Not Required)**
- **On-Board 12.288MHz and 13MHz Clock Oscillators**
- **On-Board Digital Audio Interface Transceiver**
- **On-Board Fiber Optic Transmitter and Receiver Modules**
- **Isolation Header for Direct Communication with the MAX9860 I²C and Digital Audio Interfaces**
- **Proven PCB Layout**
- **Windows 2000-, Windows XP-, and Windows Vista (32-Bit)-Compatible Software**

Ordering Information

PART	TYPE
MAX9860EVKIT+	EV Kit

+Denotes lead(Pb)-free and RoHS compliant.

System Diagram

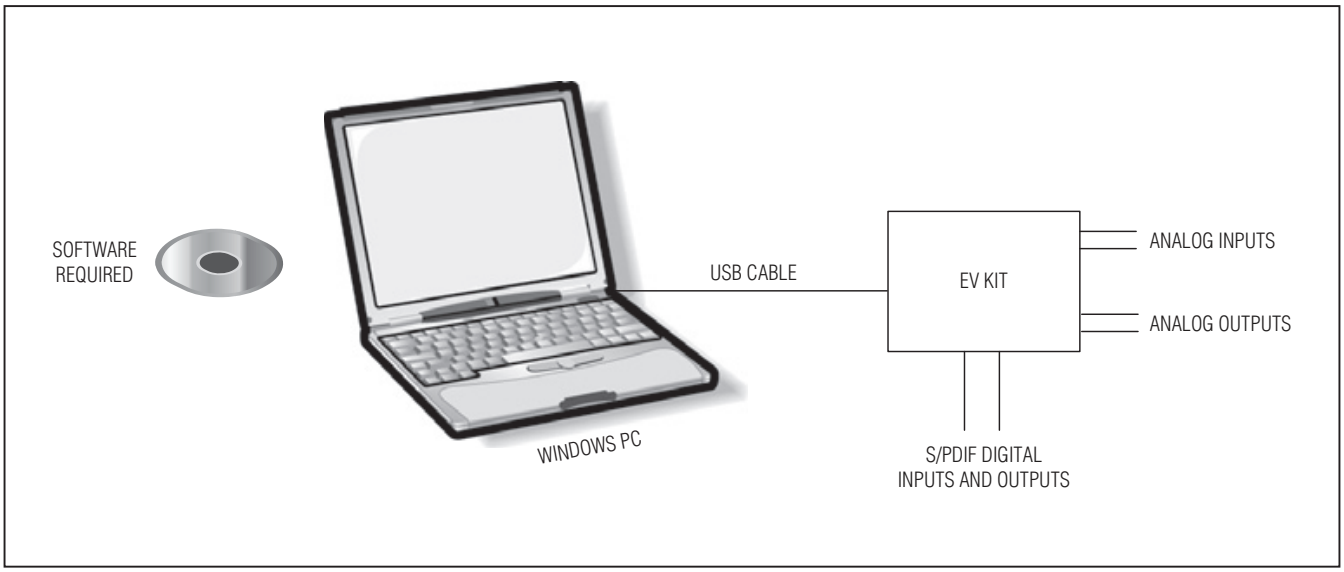

Windows, Windows XP, and Windows Vista are registered trademarks of Microsoft Corp.

For pricing, delivery, and ordering information, please contact Maxim Direct at 1-888-629-4642, or visit Maxim's website at www.maxim-ic.com.

Component List

DESIGNATION	QTY	DESCRIPTION
REQUIRED COMPONENTS		
C1, C2, C3, C5–C11	10	1.0µF ±10%, 6.3V X5R ceramic capacitors (0402) Murata GRM155R60J105K
C4	1	2.2µF ±10%, 6.3V X5R ceramic capacitor (0603) Murata GRM188R60J225K
SUPPORT COMPONENTS		
C12, C17, C18, C19, C32, C34, C45, C46	8	1µF ±10%, 6.3V X5R ceramic capacitors (0603) Murata GRM188R60J105K
C13, C16, C23, C24, C30, C33, C35, C39–C42, C47	12	0.1µF ±10%, 16V X5R ceramic capacitors (0603) Murata GRM188R61C104K
C14, C15, C20, C21, C26–C29	8	0.01µF ±10%, 16V X7R ceramic capacitors (0603) Murata GRM188R71C103K
C22	1	0.047µF ±10%, 16V X7R ceramic capacitor (0603) Murata GRM188R71C473K
C25	1	0.47µF ±10%, 16V X7R ceramic capacitor (0603) Murata GRM188R71C474K
C31	1	0.033µF ±10%, 16V X7R ceramic capacitor (0603) Murata GRM188R71C333K
C36, C37	2	10pF ±5%, 50V C0G ceramic capacitors (0603) Murata GRM1885C1H100J
C38	1	10µF ±10%, 6.3V X5R ceramic capacitor (0805) Murata GRM219R60J106K
C43, C44	2	22pF ±5%, 50V C0G ceramic capacitors (0603) Murata GRM1885C1H220J
C48–C52	0	Not installed, ceramic capacitors (0402)
D1	1	Surface-mount LED, yellow (0603)
D2	1	Surface-mount LED, red (0603)

DESIGNATION	QTY	DESCRIPTION
FB1, FB2	2	0.1Ω DCR, 60Ω at 100MHz ferrite beads Murata BLM18PG600SN1
J1	1	Digital audio fiber optic transmitter module Toshiba TOTX147L(F,T)
J2	1	Digital audio fiber optic receiver module Toshiba TORX147L(F,T)
J3	0	Not installed, 10-pin header (2 x 5)
J4	1	USB type-B right-angle receptacle
JU1–JU7, JU9, JU10, JU11	10	2-pin headers
JU8	1	21-pin header (3 x 7)
L1	1	47µH ±5%, 200mA inductor (1812) Coilcraft 1812LS-473XJLB
R1, R2, R6, R12	4	2.2kΩ ±5% resistors (0402)
R3	1	10kΩ ±5% resistor (0402)
R4, R5	0	Not installed, resistors (0402)
R7–R11	5	75Ω ±5% resistors (0402)
R13	1	402Ω ±5% resistor (0603)
R14	1	47kΩ ±5% resistor (0603)
R15, R16	2	220Ω ±5% resistors (0603)
R17, R19–R22	5	0Ω ±5% resistors (0603)
R18, R23, R24	3	1.5kΩ ±5% resistors (0603)
R25, R26	2	27Ω ±5% resistors (0603)
R27	1	2.2kΩ ±5% resistor (0603)
R28	1	470Ω ±5% resistor (0603)
R29	1	10kΩ ±5% resistor (0603)
U1	1	Mono audio voice codec (24 TQFN-EP*) Maxim MAX9860ETG+
U2, U3	2	Low-noise linear regulators (5 SC70) Maxim MAX8510EXK18+
U4	1	Digital audio transceiver (28 SO) CirrusLogic CS8427-CSZ
U5, U6	2	2:1 high-speed MUXes (6 SC70)

Component List (continued)

DESIGNATION	QTY	DESCRIPTION
U7	1	Low-noise linear regulator (5 SC70) Maxim MAX8511EXK33+
U8	1	USB-to-UART converter (32 TQFP)
U9	1	93C46 type 3-wire EEPROM (8 SO)
U10	1	Low-noise linear regulator (5 SC70) Maxim MAX8511EXK25+
U11	1	Microcontroller (68 QFN-EP*) Maxim MAXQ2000-RAX+
Y1	1	12.288MHz clock oscillator
Y2	1	13MHz clock oscillator Hong Kong X'tals C4M13000NSMI02601-0
Y3	1	16MHz surface-mount crystal Hong Kong X'tals SSM16000N1HK188F0-0
Y4	0	Not installed, crystal
Y5	1	6MHz surface-mount crystal Hong Kong X'tals SSL60000N1HK188F0-0
—	1	USB high-speed A-to-B cable, 6ft
—	17	Shunts
—	1	PCB: MAX9860 EVALUATION KIT+

**EP = Exposed pad.*

Component Suppliers

SUPPLIER	PHONE	WEBSITE
Coilcraft, Inc.	847-639-6400	www.coilcraft.com
Hong Kong X'tals Ltd.	852-35112388	www.hongkongcrystal.com
Murata Electronics North America, Inc.	770-436-1300	www.murata-northamerica.com
Toshiba America Electronic Components, Inc.	949-623-2900	www.toshiba.com/taec

Note: *Indicate that you are using the MAX9860 when contacting these component suppliers.*

MAX9860 EV Kit Files

FILE	DESCRIPTION
INSTALL.EXE	Installs the EV kit files on your computer
MAX9860.EXE	Application program
FTDIBUS.INF	USB device driver file
UNINST.EXE	Uninstalls the EV kit software
USB_Driver_Help.PDF	USB driver installation help file

Quick Start

Recommended Equipment

- MAX9860 EV kit (USB A-to-B cable included)
- User-supplied Windows 2000, Windows XP, or Windows Vista PC with a spare USB port
- Speaker (16Ω or 32Ω, 50mW or greater)
- Two single-ended or differential analog audio sources
- Digital audio equipment with two TOSLINK optical cables

Refer to the MAX9860 IC data sheet while using this EV kit for detailed descriptions of the codec's features.

Note: In the following sections, software-related items are identified by bolding. Text in **bold** refers to items directly from the EV kit software. Text in **bold and underlined** refers to items from the Windows operating system.

Procedure

The MAX9860 EV kit is fully assembled and tested. Follow the steps below to verify board operation before exercising the full features of the MAX9860:

1) Verify that all of the jumpers are set in their default positions, as shown in Table 1.
2) Connect one TOSLINK optical cable between the digital audio equipment input and the J1 module on the EV kit board.
3) Connect the other TOSLINK optical cable between the digital audio equipment output and the J2 module on the EV kit board.
4) Connect one analog audio source to the MICLP and MICLN pads on the EV kit board. Connect the MICLN pad to GND for single-ended microphone input.
5) Connect the other analog audio source to the MICRP and MICRN pads on the EV kit board. Connect the MICRN to GND for single-ended microphone input.
6) Connect the speaker to the OUTP and OUTN pads on the EV kit board.
7) Set the digital audio equipment audio output and input sampling frequency to 48kHz.
8) Enable the digital audio equipment input and output.
9) Enable the two analog audio sources.
10) Visit **www.maxim-ic.com/evkitsoftware** to download the latest version of the EV kit software, 9860Rxx.ZIP.
11) Install the MAX9860 evaluation software on your computer by running the INSTALL.EXE program. The program files are copied and icons are created in the Windows **Start** menu.
12) Connect the USB cable from the PC to the EV kit board. A **New Hardware Found** window pops up when installing the USB driver for the first time. If a window is not seen that is similar to the one described above after 30s, remove the USB cable from the board and reconnect it. Administrator privileges are required to install the USB device driver on Windows.
13) Follow the directions of the **Found New Hardware** window to install the USB device driver. Manually specify the location of the device driver to be **C:\Program Files\MAX9860** (default installation directory) using the **Browse** button. During device driver installation, Windows may show a warning message indicating that the device driver Maxim uses does not contain a digital signature. This is not an error condition and it is safe to proceed with installation. Refer to the USB_Driver_Help.PDF document included with the software for additional information.
14) Start the EV kit software by opening its icon in the **Start | Programs** menu.
15) The EV kit software main window appears as shown in Figure 1. Verify that the message **MAX9860: Connected** is displayed on the status bar at the bottom of the software's main window.
16) In the **Clock Sources** group box, click on the **Recovered Master Clock** radio button.
17) Press the **Configure** button.
18) On the top-right corner of the software's main window, select **Enabled** from the drop-down list.
19) Verify that audio from the digital audio equipment is output at the speaker and the two analog audio sources are output to the digital audio equipment.

Detailed Description of Software

Software Main Window

On the top of the main window, press the **Read All** button to read all of the MAX9860 register values and update the GUI. Press **Reset** to reset the EV kit hardware. Press **Connected** to set up the connection between the EV kit and the software application. The drop-down list lets a user enable or disable the MAX9860.

The **Device Status** group box reports the status of various device functions. Check/uncheck the checkboxes to enable/disable the hardware interrupts for each status flag.

The lower side of the main window includes six tabs. On each tab sheet, the user can exercise a group of related configurations and check the register values. Each control on the GUI generates the expected read and/or write operations on the internal registers of the MAX9860 and the CS8427 digital audio transceiver.

File Menu

Select the **Save Configuration** menu item to save the current EV kit configuration to a text file that can be loaded at a later time. Select **Load Configuration** to reload settings from a saved file.

Select **Exit** to exit the application.

View Menu

Select the **View Transceiver Registers** menu item to display or hide the **CS8427** tab to change the digital audio transceiver registers.

Options Menu

Select the **Power On Reset** menu item to reset the MAX9860 to its power-on state. Select **Read Status** to read the MAX9860 status registers. Select **Auto Read Status** to enable the automatic read of the MAX9860 status registers. Select **Auto Connect** to automatically set up the connection between the EV kit and the software application in case the connection is lost.

Tools Menu

Select the **Reconnect to EVKIT** menu item to set up the connection between the EV kit and the software application.

Select **Debug Mode** to bring up the **Maxim Command Module Interface** window. The interface allows I²C operations, such as read byte and write byte, to be executed. Deselect the **Auto Read Status** menu item before using the command module interface. The I²C dialog boxes accept numeric data in binary, decimal, or hexadecimal. Hexadecimal numbers should be prefixed by $ or 0x. Binary numbers must be exactly eight digits. See Figure 2 for an example of this control method.

Help Menu

Select **Help** for information about this software.

Digital Audio Interface and Clocking Tab

The **Digital Audio Interface and Clocking** tab sheet (Figure 1) contains the master clock (MCLK) and digital audio interface selections for the MAX9860. A user can select an automatic typical interface configuration or manually configure the device according to specific requirements.

Playback / Sidetone Tab

The **Playback / Sidetone** tab sheet (Figure 3) includes the DAC enable and gain controls. It also includes the sidetone enable and level controls.

Record Tab

The **Record** tab sheet (Figure 4) controls the functionality of the ADC and the microphone circuitry on the MAX9860.

Digital Filters Tab

The **Digital Filters** tab sheet (Figure 5) controls the functionality of the DAC and ADC voice filters on the MAX9860.

AGC / NG Tab

The **AGC / NG** tab sheet (Figure 6) includes the settings for the noise gate and the automatic gain control on the MAX9860.

Registers Tab

The **Registers** tab sheet (Figure 7) displays all of the MAX9860 register values on one page. To change a register value, type in the new value in the appropriate edit box and press the Enter key on the keyboard, or click the bit names on the GUI.

CS8427 Tab

The **CS8427** tab sheet (Figure 8) displays the MAX9860 EV kit-related CS8427 register values on one page. To change a register value, type in the new value in the appropriate edit box and press Enter or click the bit names on the GUI.

MAX9860 Evaluation Kit

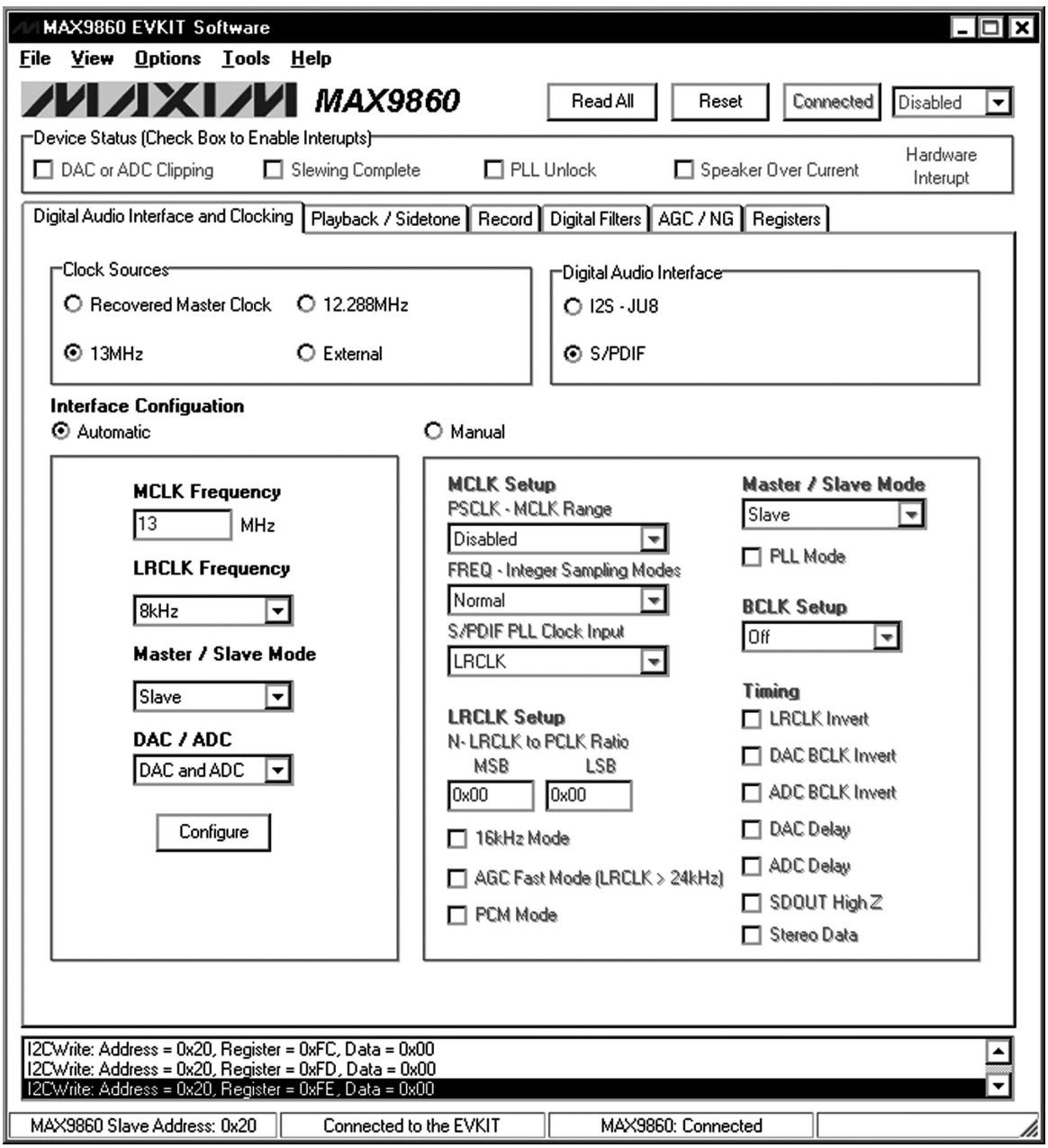

Figure 1. MAX9860 Evaluation Software Main Window

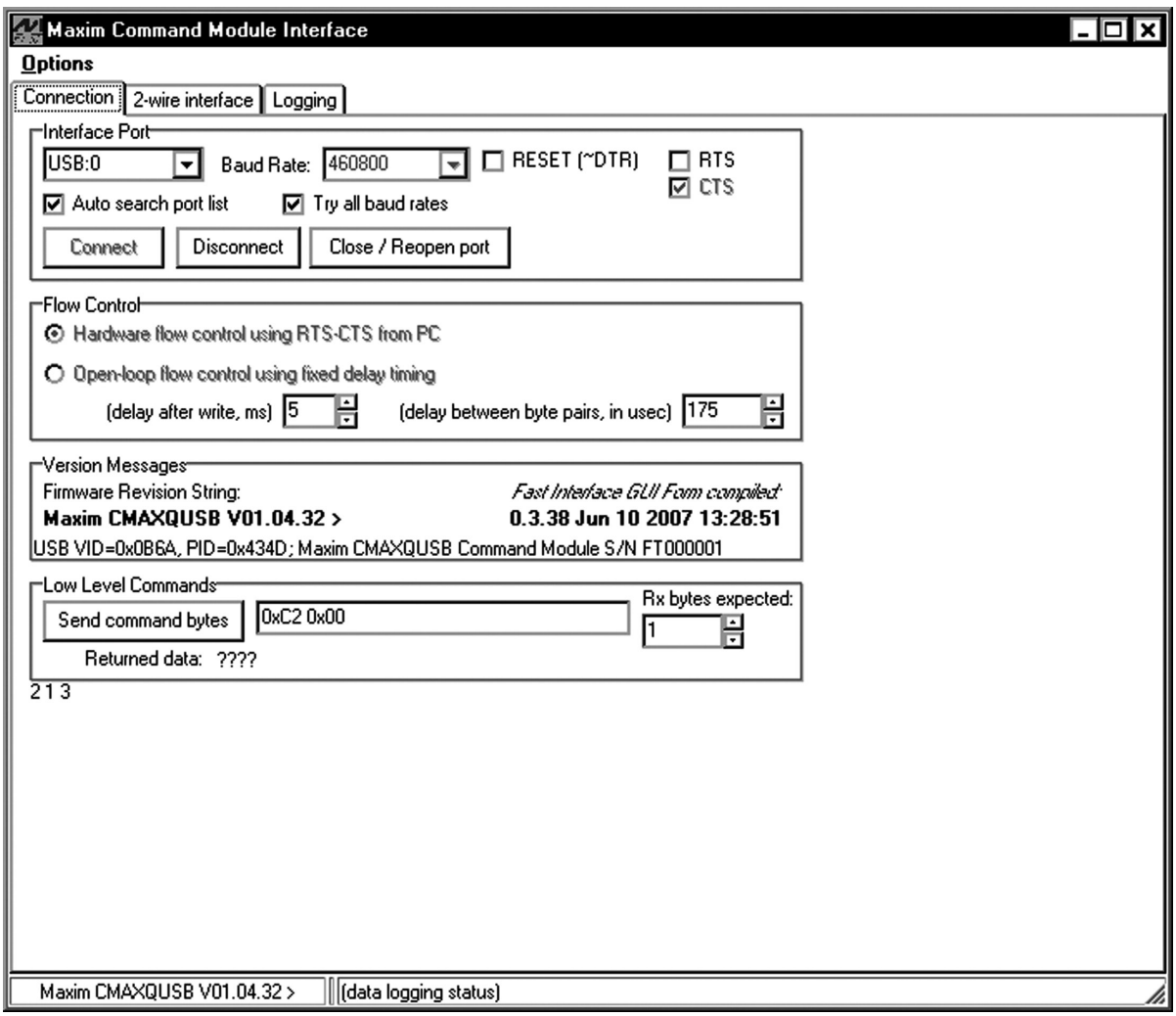

Figure 2. MAX9860 Evaluation Software (Maxim Command Module Interface)

MAX9860 Evaluation Kit

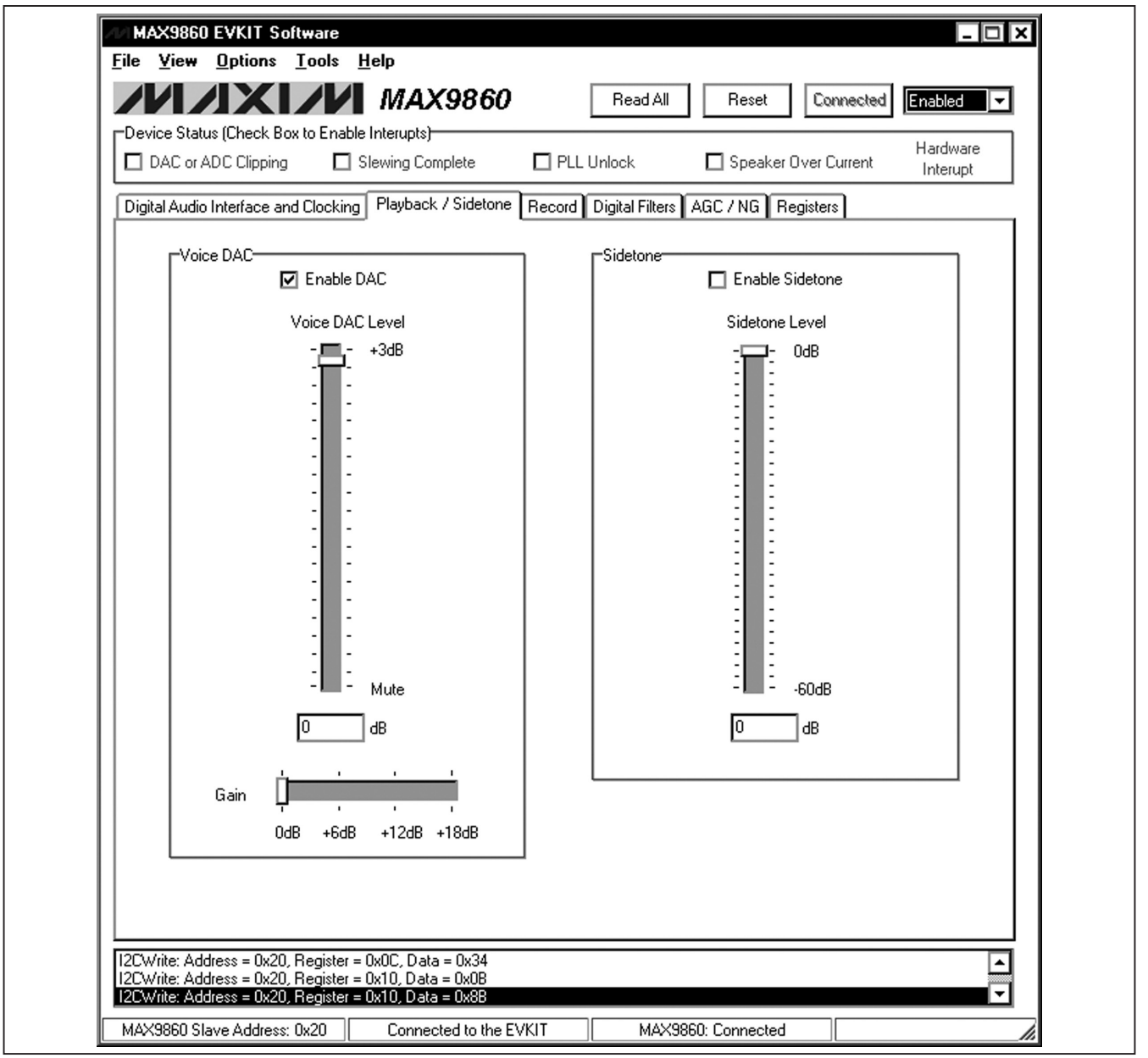

Figure 3. MAX9860 Evaluation Software (Playback / Sidetone Tab)

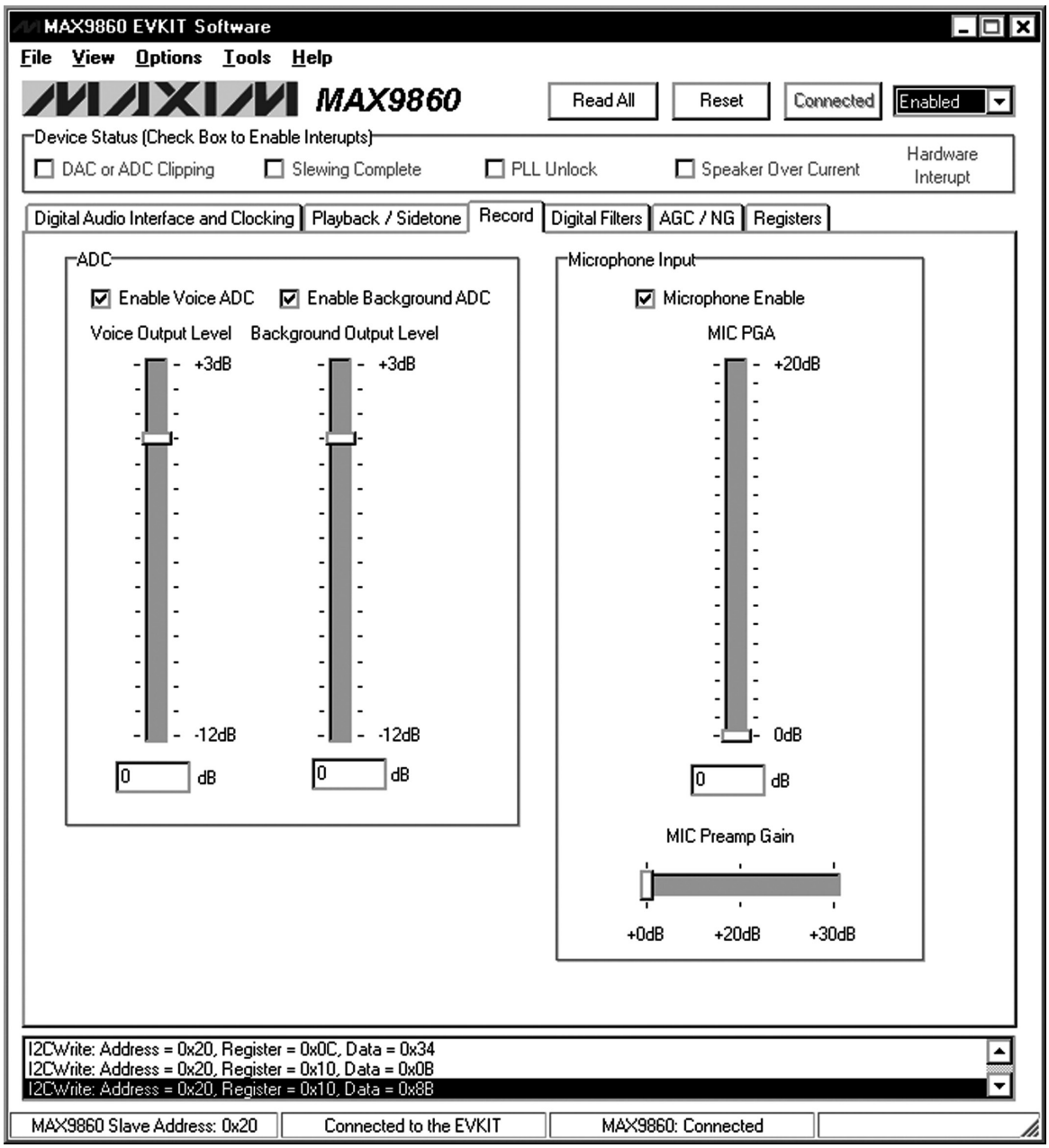

Figure 4. MAX9860 Evaluation Software (Record Tab)

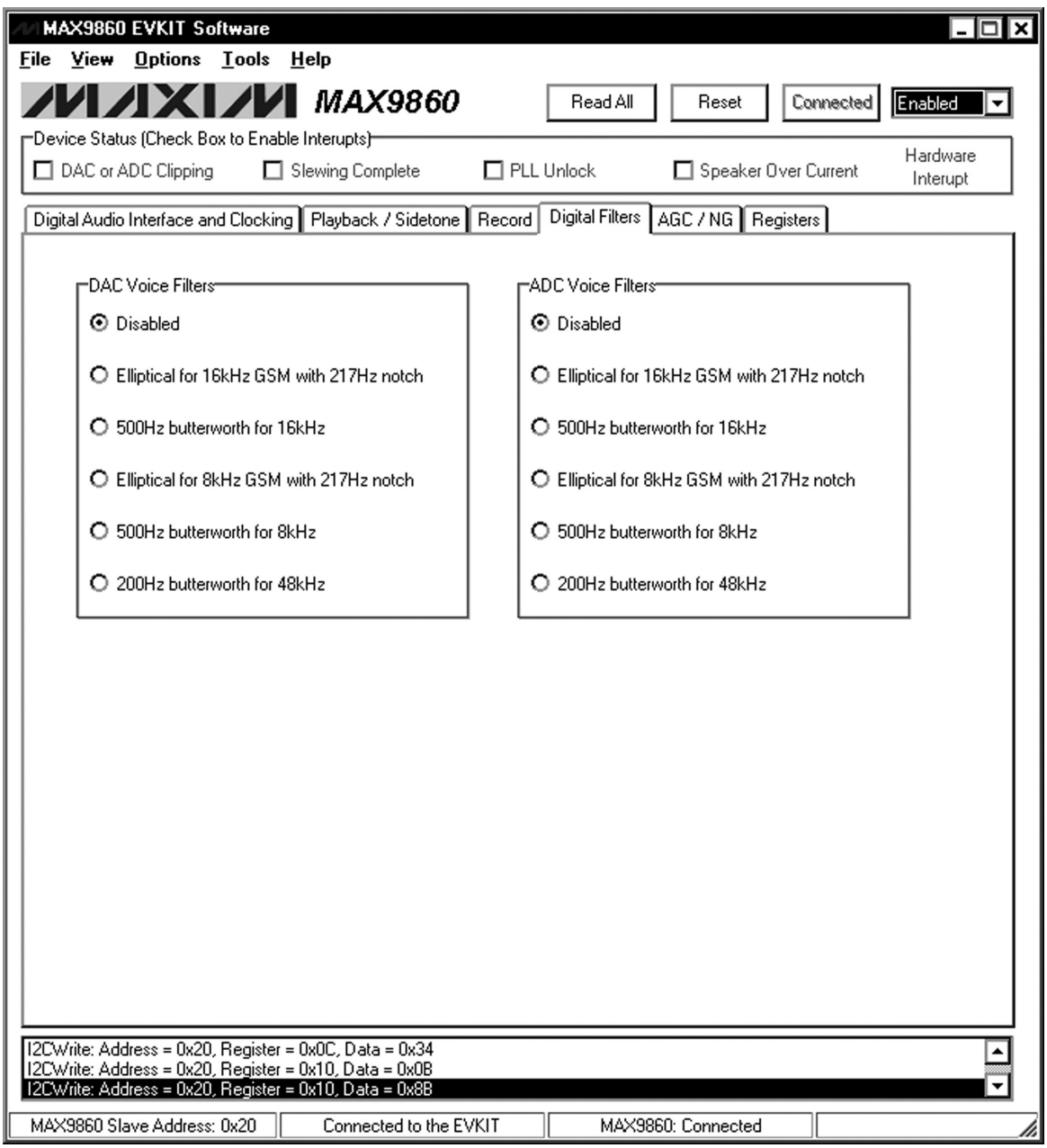

Figure 5. MAX9860 Evaluation Software (Digital Filters Tab)

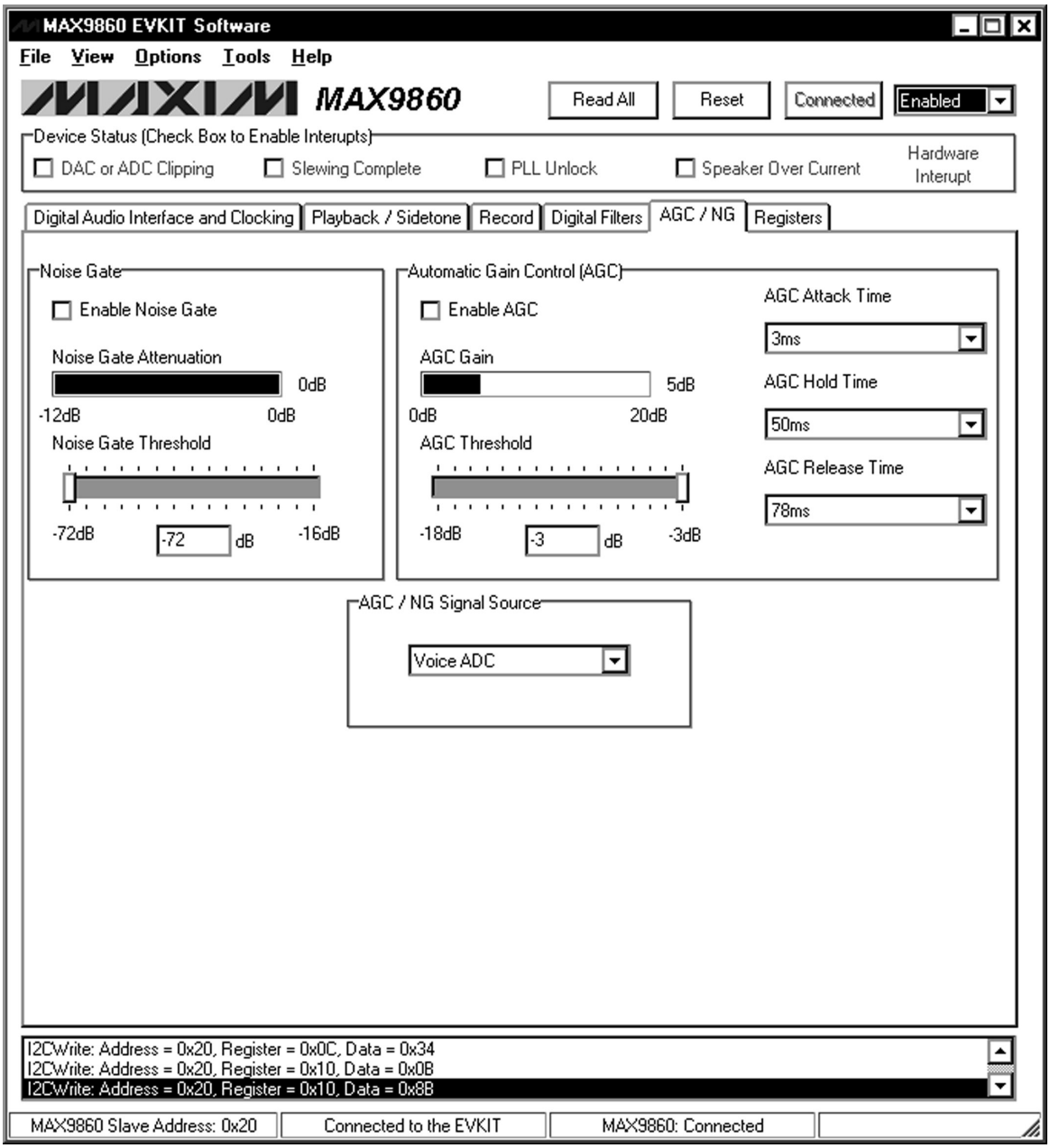

Figure 6. MAX9860 Evaluation Software (AGC / NG Tab)

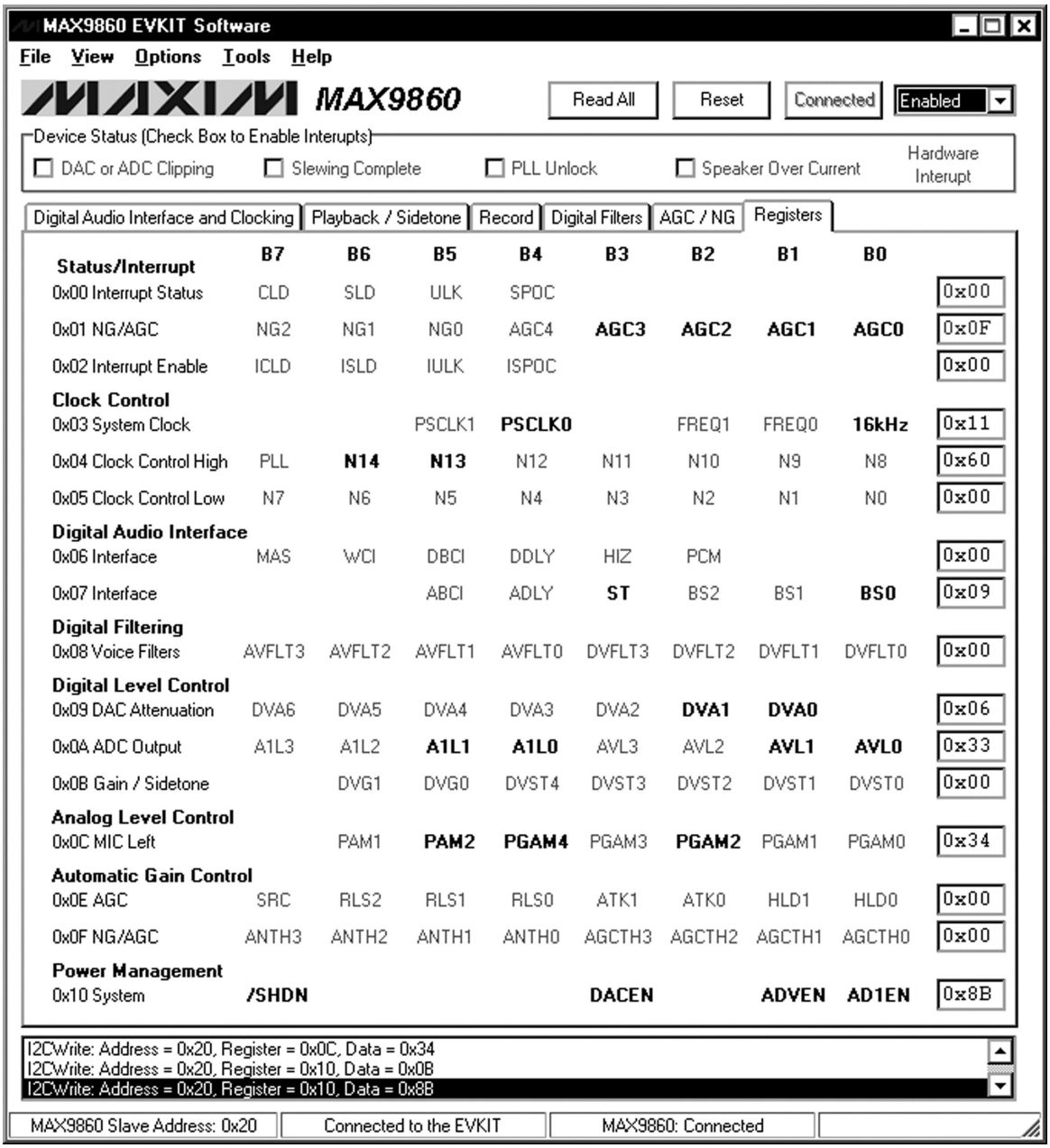

Figure 7. MAX9860 Evaluation Software (Registers Tab)

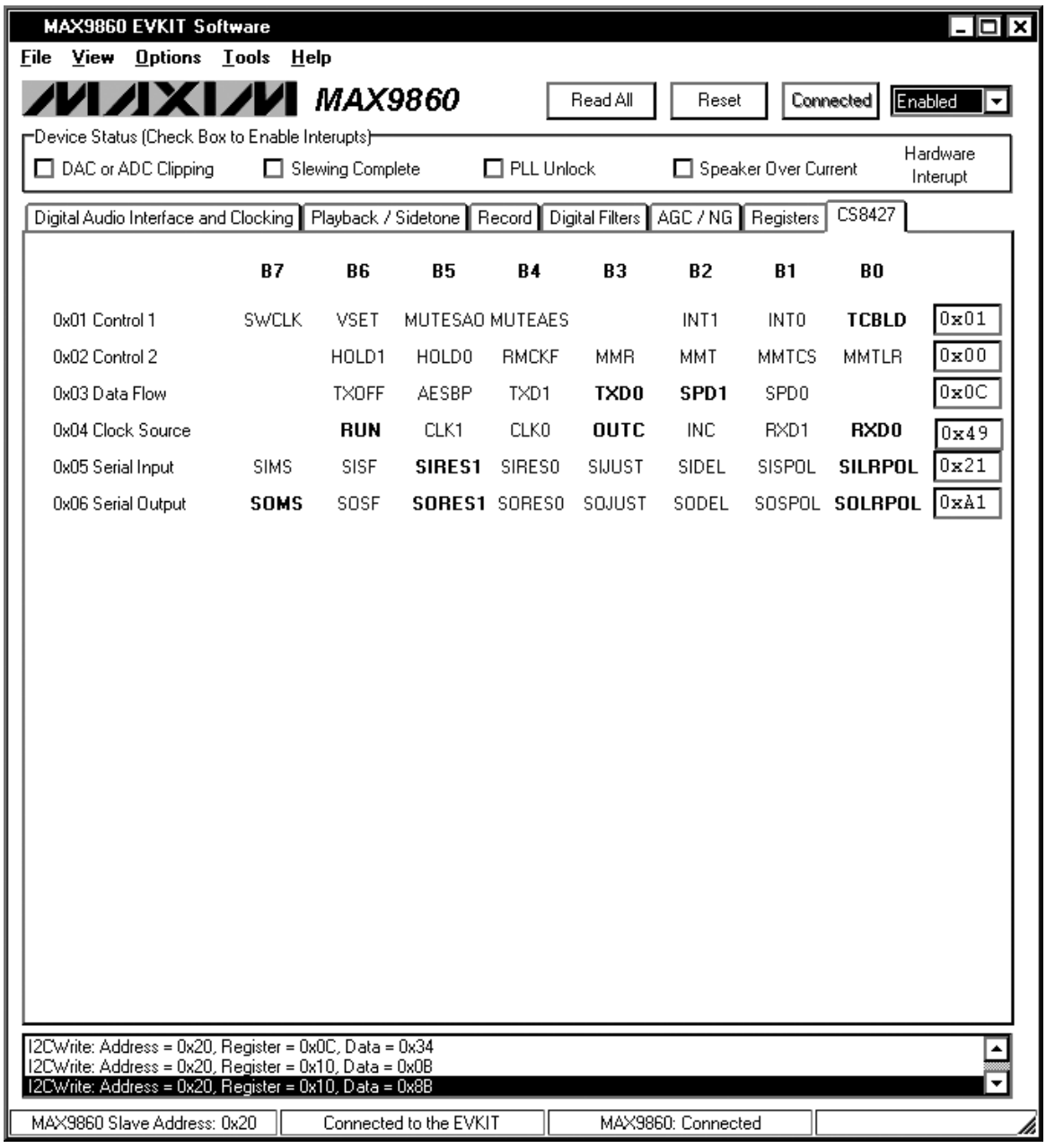

Figure 8. MAX9860 Evaluation Software (CS8427 Tab)

Detailed Description of Hardware

The MAX9860 EV kit is a complete digital audio evaluation system for the MAX9860 mono audio codec. The EV kit provides translation between the digital audio signals and optical S/PDIF signals to allow easy connection with consumer electronics devices. See Table 1 for a description of all EV kit jumper configurations.

Clocking

On-Board Clock

The EV kit has one 12.288MHz and one 13MHz clock oscillator on the board to provide flexible master-clock selections for the MAX9860.

Recovered Clock

When the S/PDIF IN has a digital audio input and the S/PDIF transceiver is in operation, the recovered clock from the S/PDIF transceiver can be used as the master clock for the MAX9860.

External Clocks

Connect an external clock source to the jumper JU8 center pin on the 5th row to drive the MAX9860's MCLK pin without using the on-board oscillator. The user must type in the correct clock frequency in the **MCLK Frequency** edit box.

Table 1. Jumper Descriptions (JU1–JU11)

JUMPER	SHUNT POSITON	DESCRIPTION
JU1	Open*	MICLP disconnected from MICBIAS
	1-2	MICLP connected to MICBIAS through a 2.2kΩ resistor
JU2	Open*	MICLN disconnected from GND
	1-2	MICLN connected to GND
JU3	Open*	MICLN disconnected from GND
	1-2	MICLN connected to GND through a 2.2kΩ resistor
JU4	Open*	MICRP disconnected from MICBIAS
	1-2	MICRP connected to MICBIAS through a 2.2kΩ resistor
JU5	Open*	MICRN disconnected from GND
	1-2	MICRN connected to GND
JU6	Open*	MICRN disconnected from GND
	1-2	MICRN connected to GND through a 2.2kΩ resistor
JU7	1-2*	MAX9860 DVDDIO connected to the on-board 3.3V supply
	Open	MAX9860 DVDDIO applied externally on the DVDDIO pad
JU8	2-3* (all rows)	MAX9860 connected to the on-board I^2S and I^2C interfaces
	Open	MAX9860 I^2S and I^2C interfaces available for the user-supplied equipment
JU9	1-2*	MAX9860 AVDD connected to the on-board 1.8V supply
	Open	MAX9860 AVDD applied externally on the AVDD pad
JU10	1-2*	MAX9860 DVDD connected to the on-board 1.8V supply
	Open	MAX9860 DVDD applied externally on the DVDD pad
JU11	1-2*	CS8427 powered by 5V USB supply
	Open	CS8427 powered by external supply on the CS8427_5V pad

**Default position.*

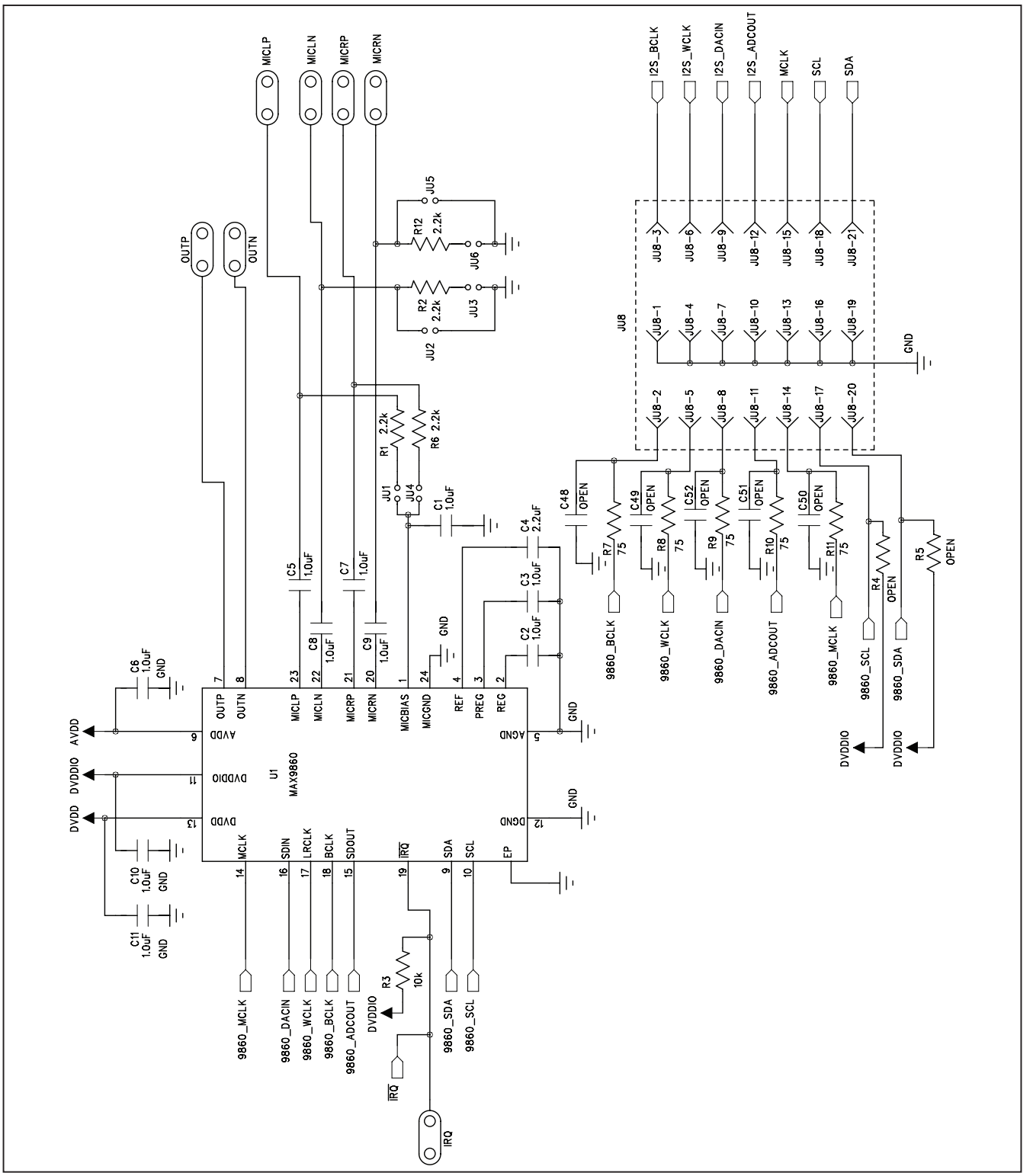

Figure 9a. MAX9860 EV Kit Schematic (Sheet 1 of 5)

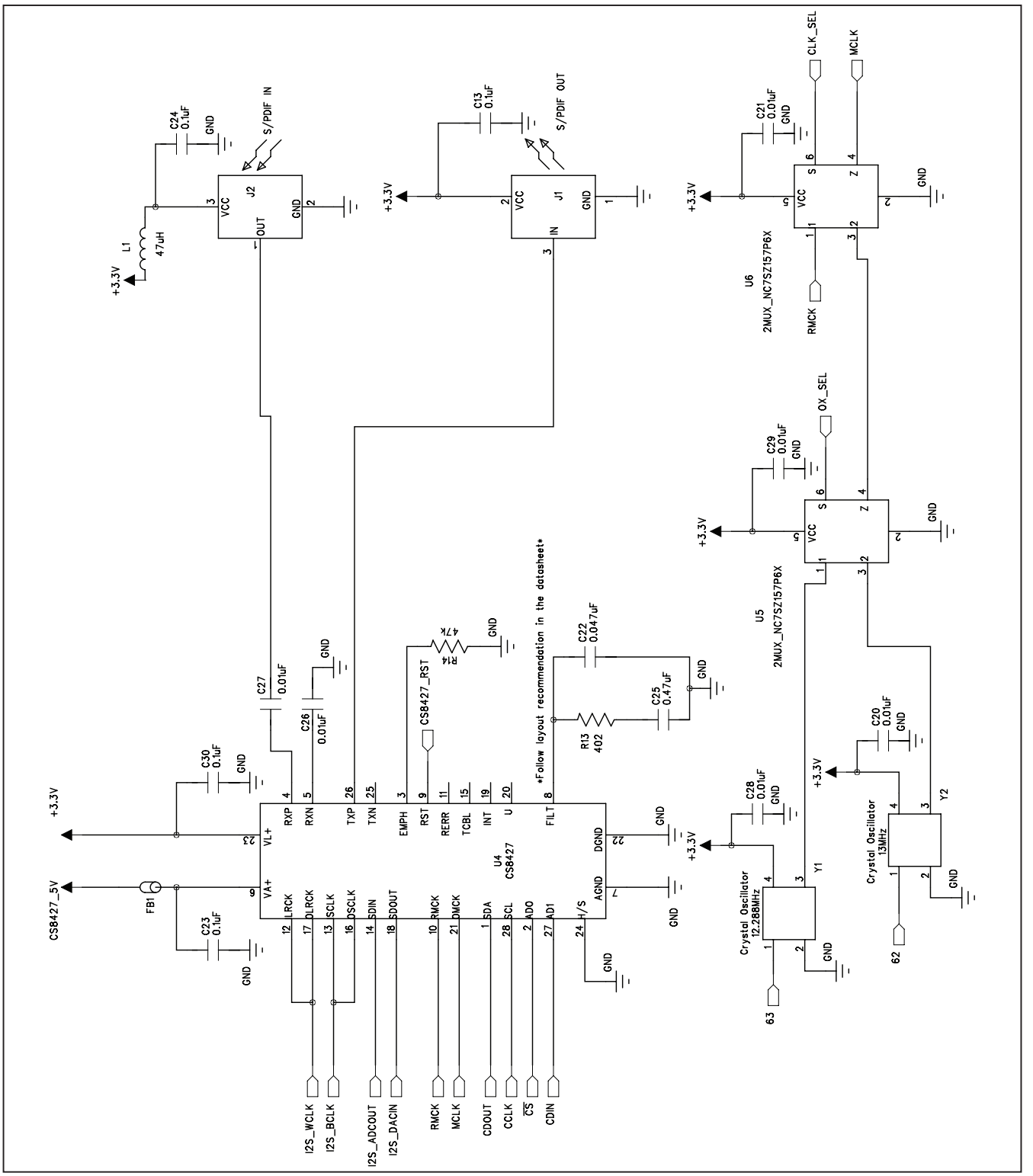

Figure 9b. MAX9860 EV Kit Schematic (Sheet 2 of 5)

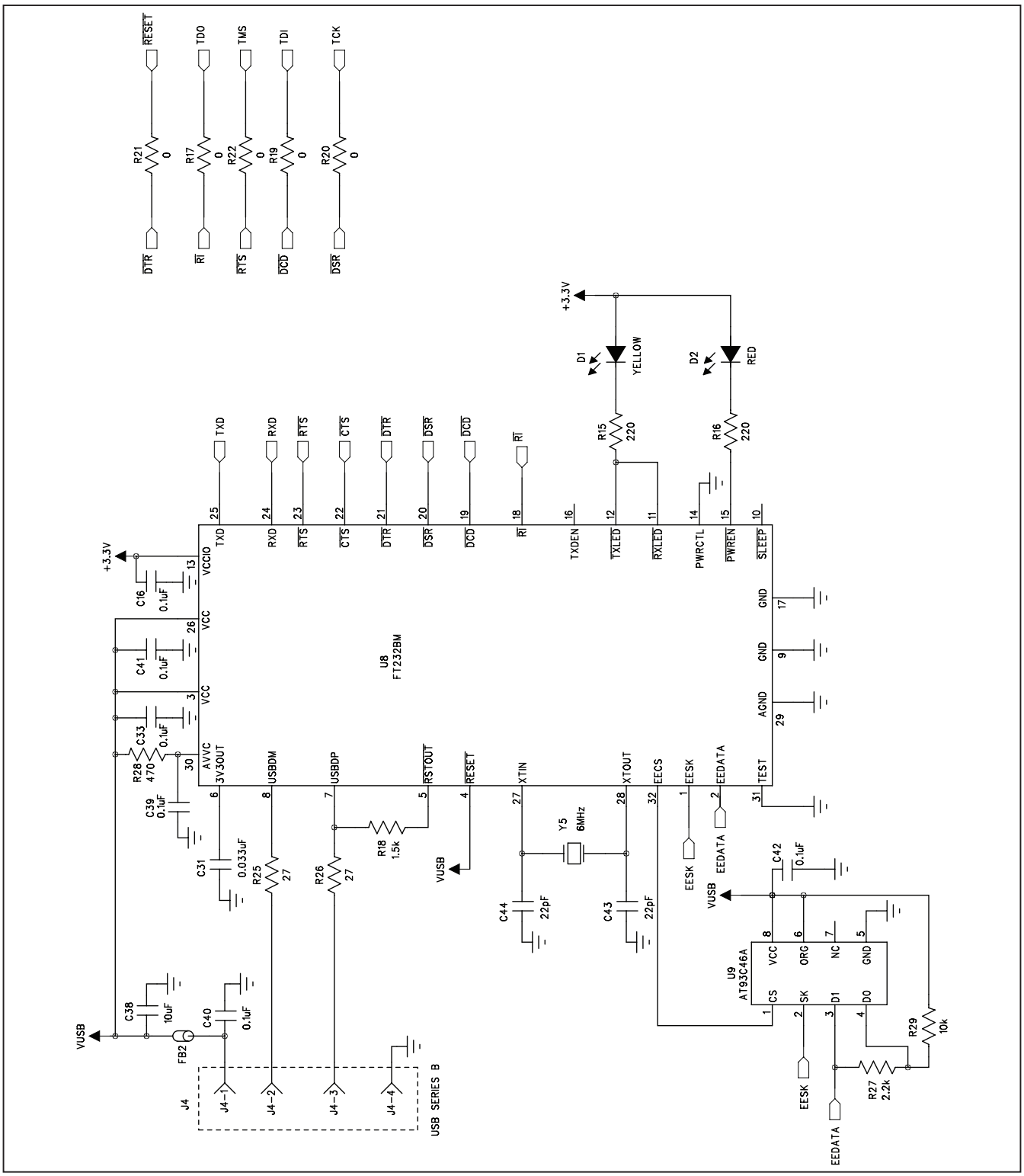

Figure 9c. MAX9860 EV Kit Schematic (Sheet 3 of 5)

MAX9860 Evaluation Kit

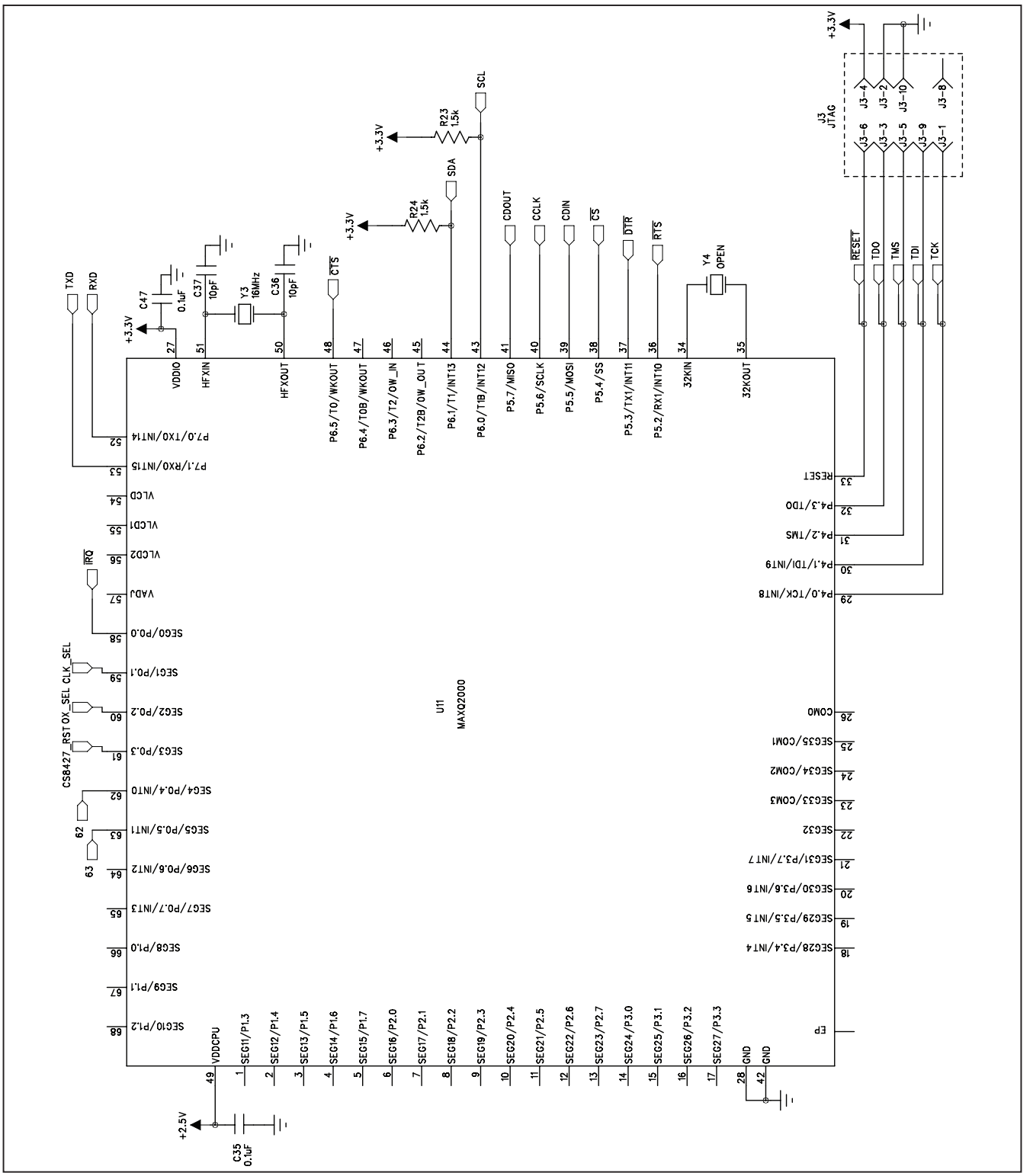

Figure 9d. MAX9860 EV Kit Schematic (Sheet 4 of 5)

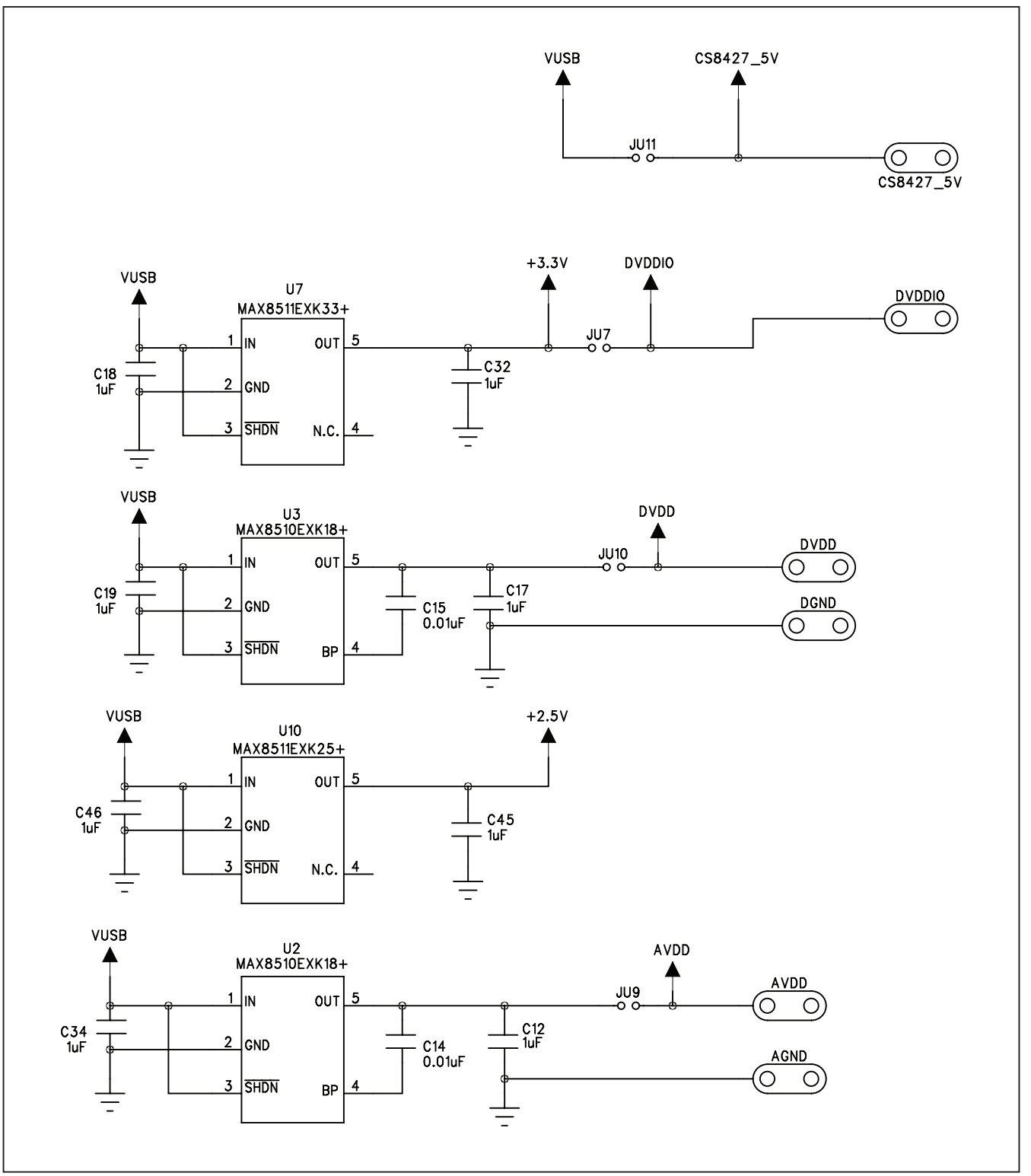

Figure 9e. MAX9860 EV Kit Schematic (Sheet 5 of 5)

MAX9860 Evaluation Kit

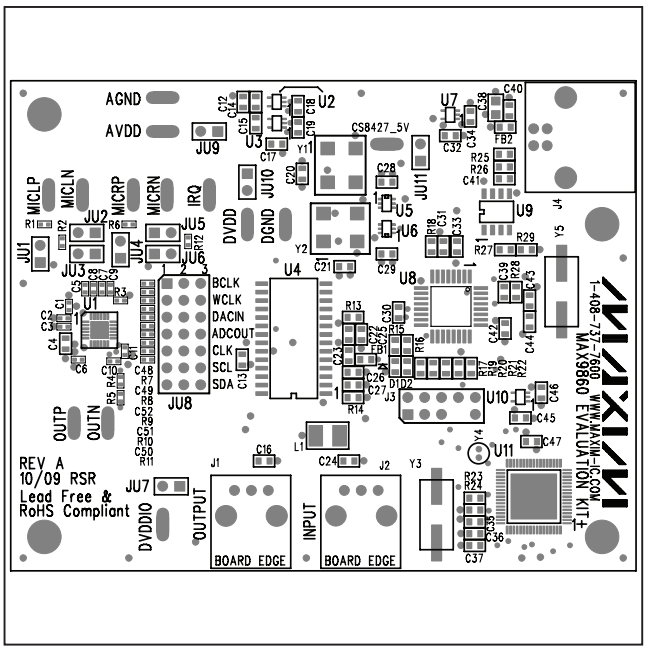

Figure 10. MAX9860 EV Kit Component Placement Guide—Component Side

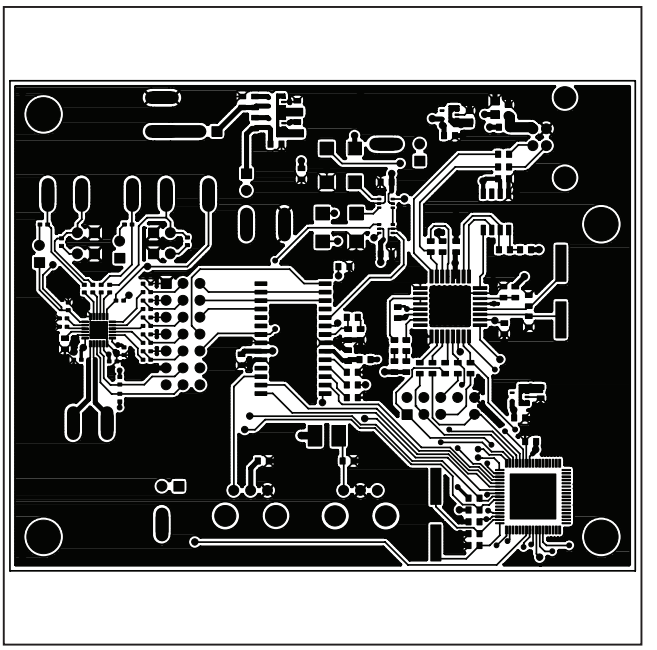

Figure 11. MAX9860 EV Kit PCB Layout—Component Side

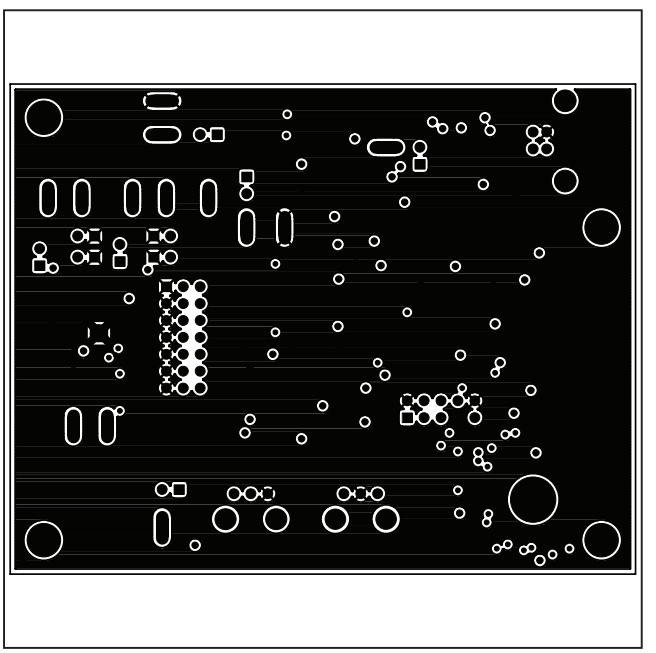

Figure 12. MAX9860 EV Kit PCB Layout—Inner Layer 2

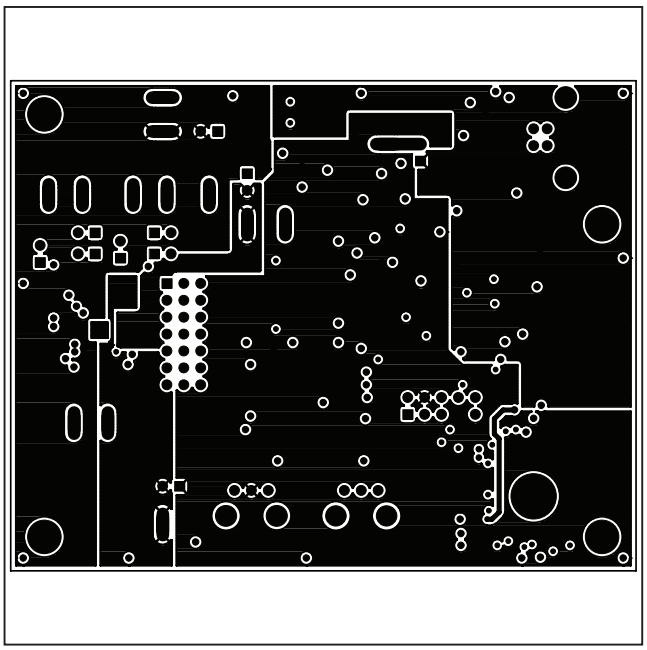

Figure 13. MAX9860 EV Kit PCB Layout—Inner Layer 3

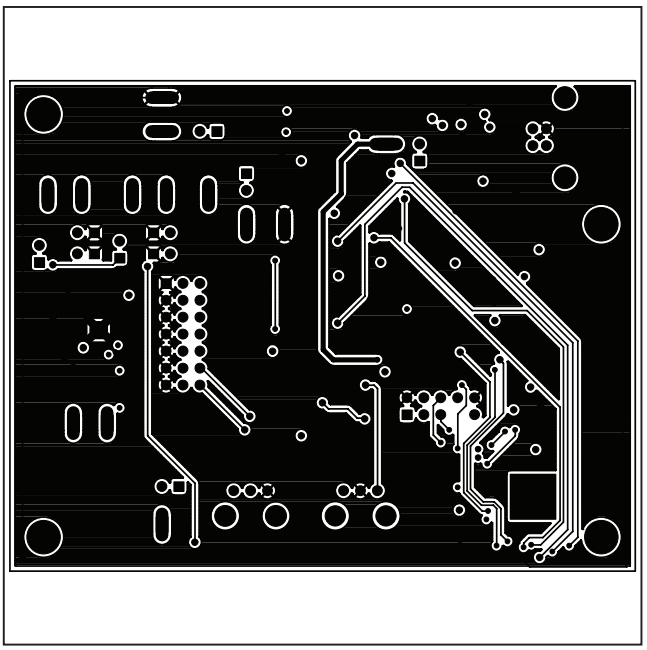

Figure 14. MAX9860 EV Kit PCB Layout—Solder Side

Maxim cannot assume responsibility for use of any circuitry other than circuitry entirely embodied in a Maxim product. No circuit patent licenses are implied. Maxim reserves the right to change the circuitry and specifications without notice at any time.

© 2009 Maxim Integrated Products Maxim is a registered trademark of Maxim Integrated Products, Inc.