MAX985/MAX986/MAX989/MAX990/MAX993/MAX994

Micropower, Low-Voltage, UCSP/SC70, Rail-to-Rail I/O Comparators

General Description

The MAX985/MAX986/MAX989/MAX990/MAX993/MAX994 single/dual/quad micropower comparators feature low-voltage operation and rail-to-rail inputs and outputs. Their operating voltages range from 2.5V to 5.5V, making them ideal for both 3V and 5V systems. These comparators also operate with ±1.25V to ±2.75V dual supplies. They consume only 11µA of supply current while achieving a 300ns propagation delay.

Input bias current is typically 1.0pA, and input offset voltage is typically 0.5mV. Internal hysteresis ensures clean output switching, even with slow-moving input signals.

The output stage's unique design limits supply-current surges while switching, virtually eliminating the supply glitches typical of many other comparators. The MAX985/MAX989/MAX993 have a push-pull output stage that sinks as well as sources current. Large internal output drivers allow rail-to-rail output swing with loads up to 8mA. The MAX986/MAX990/MAX994 have an open-drain output stage that can be pulled beyond V_{CC} to 6V (max) above V_{EE}. These open-drain versions are ideal for level translators and bipolar to single-ended converters.

The single MAX985 is available in a chip-scale package (UCSP™), significantly reducing the required PC board area. The single MAX985/MAX986 are available in 5-pin SC70 packages and the dual MAX989/MAX990 are available in 8-pin SOT23 packages.

Selector Guide

PART	COMPARATORS PER PACKAGE	OUTPUT STAGE
MAX985	1	Push-Pull
MAX986	1	Open-Drain
MAX989	2	Push-Pull
MAX990	2	Open-Drain
MAX993	4	Push-Pull
MAX994	4	Open-Drain

Applications

Portable/Battery-Powered Systems

Mobile Communications

Zero-Crossing Detectors

Window Comparators

Level Translators

Threshold Detectors/Discriminators

Ground/Supply-Sensing Applications

IR Receivers

Digital Line Receivers

UCSP is a trademark and µMAX is a registered trademark of Maxim Integrated Products, Inc.

Features

- **11µA Quiescent Supply Current**
- **2.5V to 5.5V Single-Supply Operation**
- **Common-Mode Input Voltage Range Extends 250mV Beyond the Rails**
- **300ns Propagation Delay**
- **Push-Pull Output Stage Sinks and Sources 8mA Current (MAX985/MAX989/MAX993)**
- **Open-Drain Output Voltage Extends Beyond V_{CC} (MAX986/MAX990/MAX994)**
- **Unique Output Stage Reduces Output Switching Current, Minimizing Overall Power Consumption**
- **80µA Supply Current at 1MHz Switching Frequency**
- **No Phase Reversal for Overdriven Inputs**
- **Available in Space-Saving Packages:**
  UCSP (MAX985)
  SOT23 (MAX985/MAX986/MAX989/MAX990)
  µMAX® (MAX989/MAX990)

Ordering Information

PART	PIN-PACKAGE	TOP MARK
MAX985EBT+TG45	6 UCSP	AAY
MAX985EXK+T	5 SC70	ABK

Note: *All devices are specified over the -40°C to +85°C operating temperature range.*
+Denotes a lead(Pb)-free/RoHS-compliant package.
T = Tape and reel.
G45 = Protective die coating.

Ordering Information continued at end of data sheet.
Typical Application Circuit appears at end of data sheet.

Pin Configurations

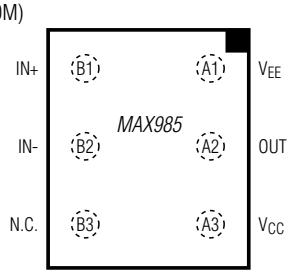

UCSP

Pin Configurations continued at end of data sheet.

For pricing, delivery, and ordering information, please contact Maxim Direct at 1-888-629-4642, or visit Maxim's website at www.maximintegrated.com.

19-1229; Rev 6; 8/12

ABSOLUTE MAXIMUM RATINGS

Supply Voltage (V_{CC} to V_{EE}) 6V
Current into Input Pins .....±20mA
IN_-, IN_+ to V_{EE} .....-0.3V to (V_{CC} + 0.3V)
OUT_ to V_{EE}
MAX985/MAX989/MAX993 .....-0.3V to (V_{CC} + 0.3V)
MAX986/MAX990/MAX994.....-0.3V to 6V
OUT_ Short-Circuit Duration to V_{EE} or V_{CC} 10s
Continuous Power Dissipation (Multilayer board, T_A = +70°C)
5-Pin SC70 (derate 3.1mW/°C above +70°C).....247mW
5-Pin SOT23 (derate 3.9mW/°C above +70°C).....312.6mW
6-Bump UCSP (derate 3.9mW/°C above +70°C).....308mW
8-Pin SOT23 (derate 5.1mW/°C above +70°C).....408.2mW
8-Pin µMAX (derate 4.8mW/°C above +70°C).....387.8mW
8-Pin SO (derate 7.4mW/°C above +70°C).....588.2mW
14-Pin TSSOP (derate 10mW/°C above +70°C) 796.8mW
14-Pin SO (derate 11.9mW/°C above +70°C).....952.4mW
Operating Temperature Range .....-40°C to +85°C
Junction Temperature.....+150°C
Storage Temperature Range .....-65°C to +150°C
Lead Temperature (except UCSP, soldering, 10s).....+300°C
Soldering Temperature (reflow) .....+260°C

Stresses beyond those listed under "Absolute Maximum Ratings" may cause permanent damage to the device. These are stress ratings only, and functional operation of the device at these or any other conditions beyond those indicated in the operational sections of the specifications is not implied. Exposure to absolute maximum rating conditions for extended periods may affect device reliability.

ELECTRICAL CHARACTERISTICS

(V_{CC} = 2.7V to 5.5V, V_{EE} = 0V, V_{CM} = 0V, T_A = -40°C to +85°C, unless otherwise noted. Typical values are at T_A = +25°C.) (Note 1)

PARAMETER	SYMBOL	CONDITIONS		MIN	TYP	MAX	UNITS
Supply Voltage	V_{CC}	Inferred from PSRR test		2.5		5.5	V
Supply Current per Comparator	I_{CC}	V_{CC} = 5V	T_A = +25°C		12	20	µA
			T_A = -40°C to +85°C			24	
		V_{CC} = 2.7V	T_A = +25°C		11	20	
			T_A = -40°C to +85°C			24	
Power-Supply Rejection Ratio	PSRR	2.5V ≤ V_{CC} ≤ 5.5V		55	80		dB
Common-Mode Voltage Range (Note 2)	V_{CMR}	T_A = +25°C		V_{EE} - 0.25		V_{CC} + 0.25	V
		T_A = -40°C to +85°C		V_{EE}		V_{CC}	
Input Offset Voltage (Note 3)	V_{OS}	Full common-mode range	T_A = +25°C		±0.5	±5	mV
			T_A = -40°C to +85°C			±7	
Input Hysteresis	V_{HYST}				±3		mV
Input Bias Current (Note 4)	I_B				0.001	10	nA
Input Offset Current	I_{OS}				0.5		pA
Input Capacitance	C_{IN}				1.0		pF
Common-Mode Rejection Ratio	CMRR			52	80		dB
Output Leakage Current (MAX986/MAX990/ MAX994 only)	I_{LEAK}	V_{OUT} = high				1.0	µA
Output Short-Circuit Current	I_{SC}	Sourcing or sinking, V_{OUT} = V_{EE} or V_{CC}	V_{CC} = 5V		95		mA
			V_{CC} = 2.7V		35		
OUT Output Voltage Low	V_{OL}	V_{CC} = 5V, I_{SINK} = 8mA	T_A = +25°C		0.2	0.4	V
			T_A = -40°C to +85°C			0.55	
		V_{CC} = 2.7V, I_{SINK} = 3.5mA	T_A = +25°C		0.15	0.3	
			T_A = -40°C to +85°C			0.4	

ELECTRICAL CHARACTERISTICS (continued)

(V_{CC} = 2.7V to 5.5V, V_{EE} = 0V, V_{CM} = 0V, T_A = -40°C to +85°C, unless otherwise noted. Typical values are at T_A = +25°C.) (Note 1)

PARAMETER	SYMBOL	CONDITIONS			MIN	TYP	MAX	UNITS
OUT Output Voltage High (MAX985/MAX989/ MAX993 only)	V_{OH}	V_{CC} = 5V, I_{SOURCE} = 8mA		T_A = +25°C	4.6	4.85		V
				T_A = -40°C to +85°C	4.45			
		V_{CC} = 2.7V, I_{SOURCE} = 3.5mA		T_A = +25°C	2.4	2.55		
				T_A = -40°C to +85°C	2.3			
OUT Rise Time (MAX985/MAX989/ MAX993 only)	t_{RISE}	V_{CC} = 5.0V		C_L = 15pF		40		ns
				C_L = 50pF		50		
				C_L = 200pF		80		
OUT Fall Time	t_{FALL}	V_{CC} = 5.0V		C_L = 15pF		40		ns
				C_L = 50pF		50		
				C_L = 200pF		80		
Propagation Delay	t_{PD-}	C_L = 15pF	MAX985/MAX989/ MAX993 only	10mV overdrive		450		ns
				100mV overdrive		300		
			MAX986/MAX990/ MAX994 only, R_{PULLUP} = 5.1kΩ	10mV overdrive		450		
				100mV overdrive		300		
	t_{PD+}	MAX985/MAX989/ MAX993 only, C_L = 15pF		10mV overdrive		450		
				100mV overdrive		300		
Power-Up Time	t_{PU}					20		µs

Note 1: All device specifications are 100% production tested at T_A = +25°C. Limits over the extended temperature range are guaranteed by design.

Note 2: Inferred from the V_{OS} test. Both or either inputs can be driven 0.3V beyond either supply rail without output phase reversal.

Note 3: V_{OS} is defined as the center of the hysteresis band at the input.

Note 4: I_B is defined as the average of the two input bias currents (I_{B-}, I_{B+}).

Typical Operating Characteristics

(V_{CC} = 5V, V_{CM} = 0V, T_A = +25°C, unless otherwise noted.)

SUPPLY CURRENT vs. TEMPERATURE

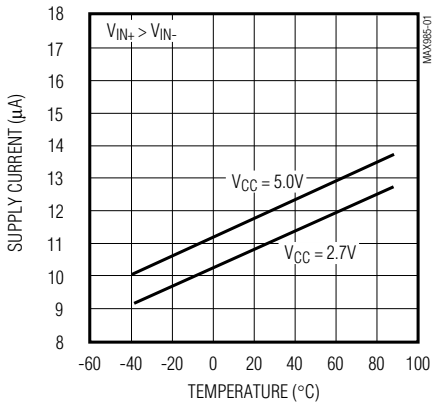

SUPPLY CURRENT vs. OUTPUT TRANSITION FREQUENCY

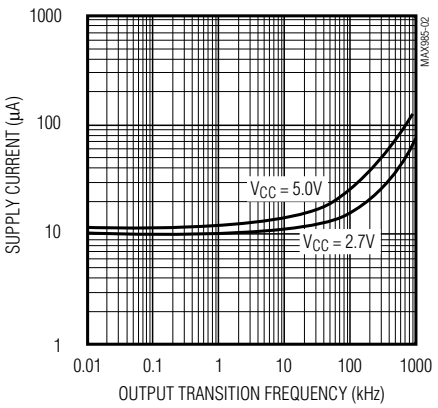

OUTPUT LOW VOLTAGE vs. OUTPUT SINK CURRENT

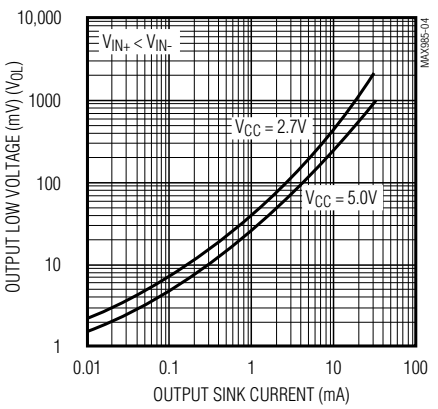

OUTPUT HIGH VOLTAGE vs. OUTPUT SOURCE CURRENT

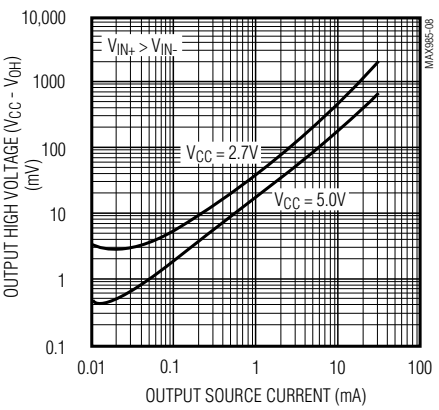

OUTPUT SHORT-CIRCUIT CURRENT vs. TEMPERATURE

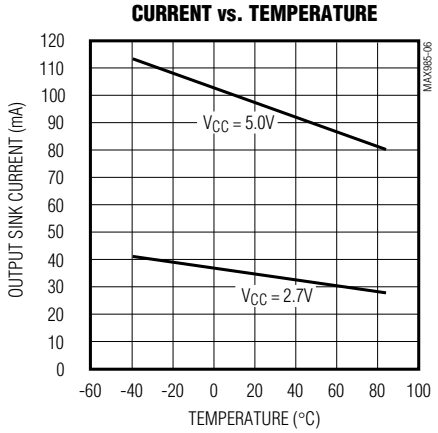

INPUT OFFSET VOLTAGE vs. TEMPERATURE

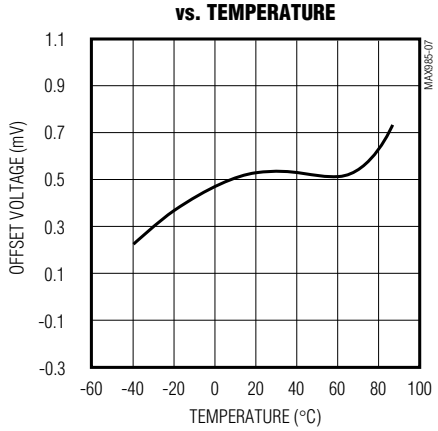

PROPAGATION DELAY vs. CAPACITIVE LOAD (V_{CC} = 3V)

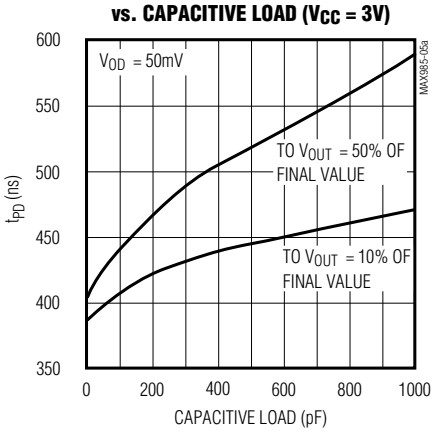

PROPAGATION DELAY vs. CAPACITIVE LOAD (V_{CC} = 5V)

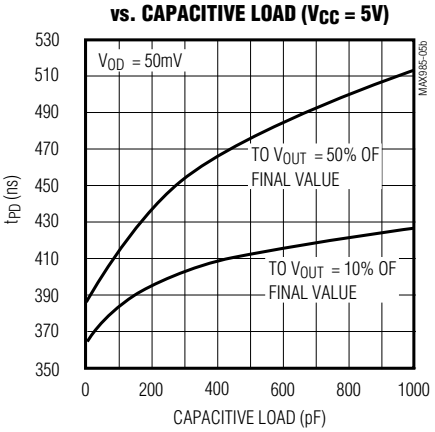

Typical Operating Characteristics (continued)

(V_{CC} = 5V, V_{CM} = 0V, T_A = +25°C, unless otherwise noted.)

PROPAGATION DELAY vs. TEMPERATURE

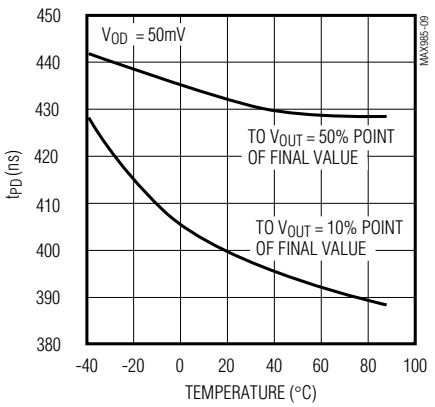

PROPAGATION DELAY vs. INPUT OVERDRIVE

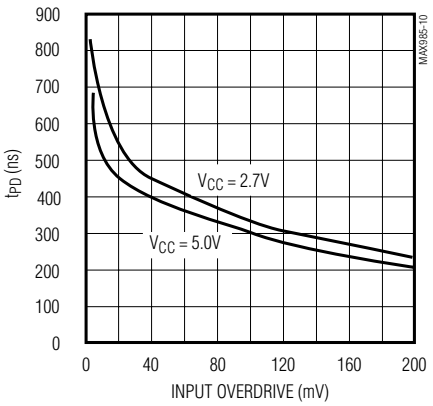

MAX985/MAX989/MAX993 PROPAGATION DELAY (t_{PD+})

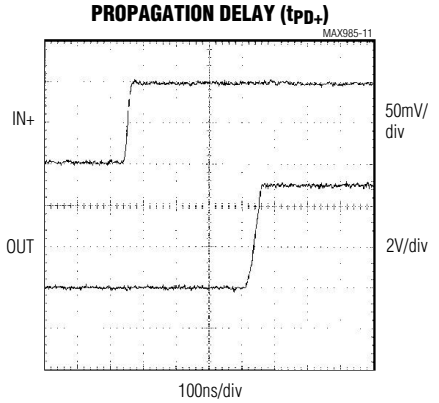

PROPAGATION DELAY (t_{PD-})

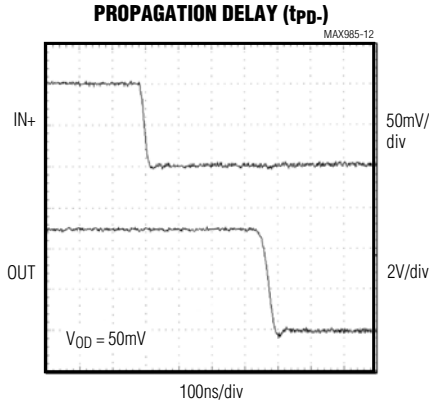

MAX985/MAX989/MAX993 SWITCHING CURRENT, OUT RISING

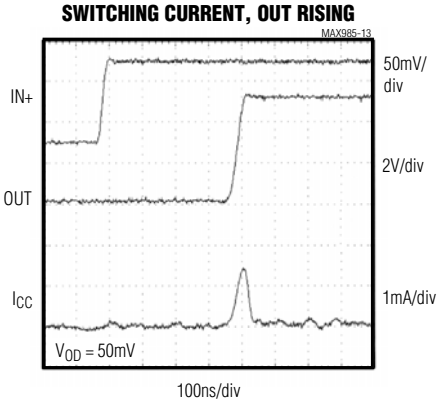

SWITCHING CURRENT, OUT FALLING

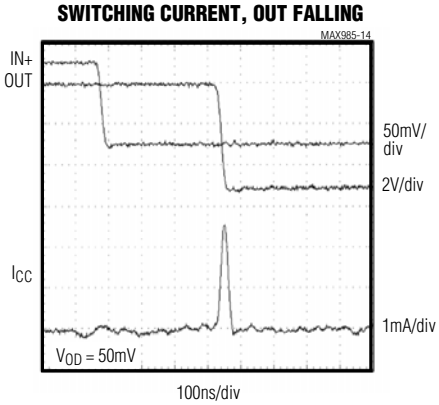

1MHz RESPONSE

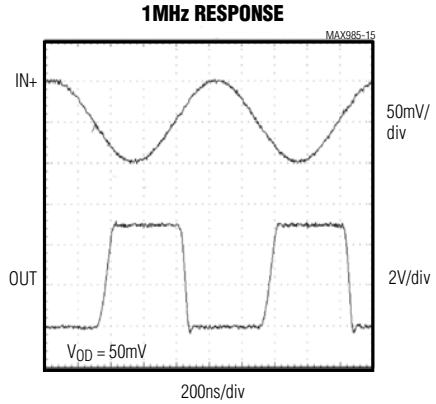

POWER-UP DELAY

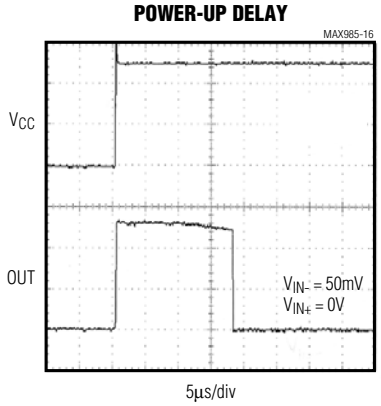

Pin/Bump Description

BUMP	PIN				NAME	FUNCTION
MAX985	MAX985/ MAX986		MAX989/ MAX990	MAX993/ MAX994		
UCSP*	SO	SOT23/ SC70	SO/µMAX/ SOT23	SO/ TSSOP		
A2	6	1	—	—	OUT	Comparator Output
A3	7	2	8	4	V_{CC}	Positive Supply Voltage
B1	3	3	—	—	IN+	Comparator Noninverting Input
B2	2	4	—	—	IN-	Comparator Inverting Input
A1	4	5	4	11	V_{EE}	Negative Supply Voltage
—	—	—	1	1	OUTA	Comparator A Output
—	—	—	2	2	INA-	Comparator A Inverting Input
—	—	—	3	3	INA+	Comparator A Noninverting Input
—	—	—	5	5	INB+	Comparator B Noninverting Input
—	—	—	6	6	INB-	Comparator B Inverting Input
—	—	—	7	7	OUTB	Comparator B Output
—	—	—	—	8	OUTC	Comparator C Output
—	—	—	—	9	INC-	Comparator C Inverting Input
				10	INC+	Comparator C Noninverting Input
				12	IND+	Comparator D Noninverting Input
				13	IND-	Comparator D Inverting Input
				14	OUTD	Comparator D Output
B3	1, 5, 8	—	—	—	N.C.	No Connection. Not internally connected.

**MAX985 only*

Detailed Description

The MAX985/MAX986/MAX989/MAX990/MAX993/MAX994 are single/dual/quad low-power, low-voltage comparators. They have an operating supply voltage range between 2.5V and 5.5V and consume only 11µA. Their common-mode input voltage range extends 0.25V beyond each rail. Internal hysteresis ensures clean output switching, even with slow-moving input signals. Large internal output drivers allow rail-to-rail output swing with up to 8mA loads.

The output stage employs a unique design that minimizes supply-current surges while switching, virtually eliminating the supply glitches typical of many other comparators. The MAX985/MAX989/MAX993 have a push-pull output structure that sinks as well as sources current. The MAX986/MAX990/MAX994 have an open-drain output stage that can be pulled beyond V_{CC} to an absolute maximum of 6V above V_{EE}.

Input Stage Circuitry

The devices' input common-mode range extends from -0.25V to (V_{CC} + 0.25V). These comparators may operate at any differential input voltage within these limits. Input bias current is typically 1.0pA if the input voltage is between the supply rails. Comparator inputs are protected from overvoltage by internal body diodes connected to the supply rails. As the input voltage exceeds the supply rails, these body diodes become forward biased and begin to conduct. Consequently, bias currents increase exponentially as the input voltage exceeds the supply rails.

Output Stage Circuitry

These comparators contain a unique output stage capable of rail-to-rail operation with up to 8mA loads. Many comparators consume orders of magnitude more current during switching than during steady-state operation. However, with this family of comparators, the supply-current change during an output transition is extremely small. The *Typical Operating Characteristics* graph Supply Current vs. Output Transition Frequency shows the minimal supply-current increase as the output switching frequency approaches 1MHz. This characteristic eliminates the need for power-supply filter capacitors to reduce glitches created by comparator switching currents. Another advantage realized in high-speed, battery-powered applications is a substantial increase in battery life.

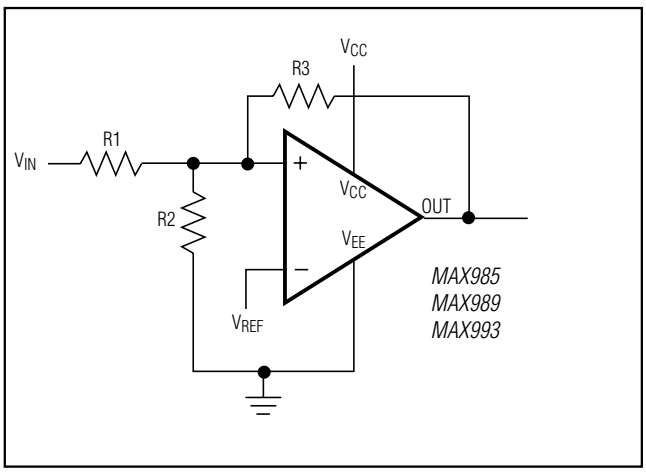

Figure 1. Additional Hysteresis (MAX985/MAX989/MAX993)

Applications Information

Additional Hysteresis

MAX985/MAX989/MAX993

The MAX985/MAX989/MAX993 have ±3mV internal hysteresis. Additional hysteresis can be generated with three resistors using positive feedback (Figure 1). Unfortunately, this method also slows hysteresis response time. Use the following procedure to calculate resistor values for the MAX985/MAX989/MAX993.

1) Select R3. Leakage current at IN is under 10nA, so the current through R3 should be at least 1µA to minimize errors caused by leakage current. The current through R3 at the trip point is (V_{REF} - V_{OUT}) / R3. Considering the two possible output states in solving for R3 yields two formulas: R3 = V_{REF} / 1µA or R3 = (V_{REF} - V_{CC}) / 1µA. Use the smaller of the two resulting resistor values. For example, if V_{REF} = 1.2V and V_{CC} = 5V, then the two R3 resistor values are 1.2MΩ and 3.8MΩ. Choose a 1.2MΩ standard value for R3.
2) Choose the hysteresis band required (V_{HB}). For this example, choose 50mV.
3) Calculate R1 according to the following equation:

   $$R1 = R3 \times (V_{HB} / V_{CC})$$

   For this example, insert the values R1 = 1.2MΩ x (50mV / 5V) = 12kΩ.
4) Choose the trip point for V_{IN} rising (V_{THR}; V_{THF} is the trip point for V_{IN} falling). This is the threshold voltage at which the comparator switches its output from low to high as V_{IN} rises above the trip point. For this example, choose 3V.

5) Calculate R2 as follows. For this example, choose an 8.2kΩ standard value:

$$R2 = \frac{1}{\left(\frac{V_{THR}}{V_{REF} \times R1}\right) - \frac{1}{R1} - \frac{1}{R3}}$$

$$R2 = \frac{1}{\left(\frac{3.0V}{1.2 \times 12k\Omega}\right) - \frac{1}{12k\Omega} - \frac{1}{2.2M\Omega}} = 8.03k\Omega$$

6) Verify trip voltages and hysteresis as follows:

$$V_{IN} \text{ rising: } V_{THR} = V_{REF} \times R1 \times \left(\frac{1}{R1} + \frac{1}{R2} + \frac{1}{R3}\right)$$

$$V_{IN} \text{ falling: } V_{THF} = V_{THR} - \left(\frac{R1 \times V_{CC}}{R3}\right)$$

$$\text{Hysteresis} = V_{THR} - V_{THF}$$

MAX986/MAX990/MAX994

The MAX986/MAX990/MAX994 have ±3mV internal hysteresis. They have open-drain outputs and require an external pullup resistor (Figure 2). Additional hysteresis can be generated using positive feedback, but the formulas differ slightly from those of the MAX985/MAX989/MAX993.

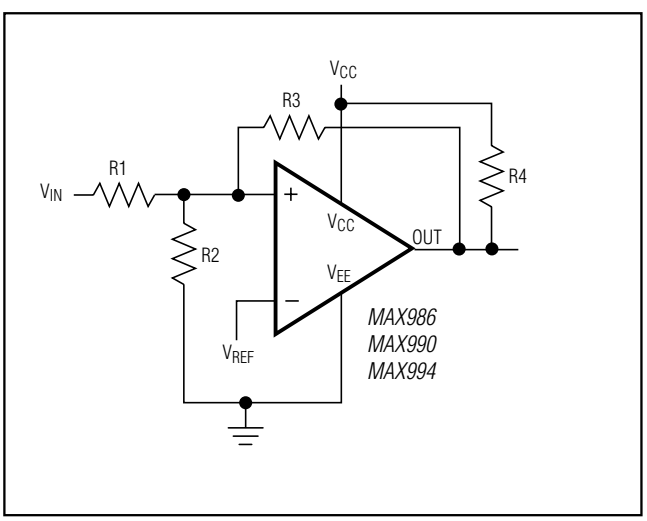

Figure 2. Additional Hysteresis (MAX986/MAX990/MAX994)

Use the following procedure to calculate resistor values:

1) Select R3 according to the formulas R3 = V_{REF} / 500µA or R3 = (V_{REF} - V_{CC}) / 500µA - R4. Use the smaller of the two resulting resistor values.
2) Choose the hysteresis band required (V_{HB}). For this example, choose 50mV.
3) Calculate R1 according to the following equation:

$$R1 = (R3 + R4) \times (V_{HB} / V_{CC})$$

4) Choose the trip point for V_{IN} rising (V_{THR}; V_{THF} is the trip point for V_{IN} falling). This is the threshold voltage at which the comparator switches its output from low to high as V_{IN} rises above the trip point.
5) Calculate R2 as follows:

$$R2 = \frac{1}{\left(\frac{V_{THR}}{V_{REF} \times R1}\right) - \frac{1}{R1} - \frac{1}{R3 + R4}}$$

6) Verify trip voltages and hysteresis as follows:

$$V_{IN} \text{ rising: } V_{THR} = V_{REF} \times R1 \times \left(\frac{1}{R1} + \frac{1}{R2} + \frac{1}{R3 + R4}\right)$$

$$V_{IN} \text{ falling: } V_{THF} = V_{THR} - \left(\frac{R1 \times V_{CC}}{R3 + R4}\right)$$

$$\text{Hysteresis} = V_{THR} - V_{THF}$$

Board Layout and Bypassing

Power-supply bypass capacitors are not typically needed, but use 100nF bypass capacitors when supply impedance is high, when supply leads are long, or when excessive noise is expected on the supply lines. Minimize signal trace lengths to reduce stray capacitance.

Zero-Crossing Detector

Figure 3 shows a zero-crossing detector application. The MAX985's inverting input is connected to ground, and its noninverting input is connected to a 100mV$_{P-P}$ signal source. As the signal at the noninverting input crosses 0V, the comparator's output changes state.

Logic-Level Translator

Figure 4 shows an application that converts 5V logic levels to 3V logic levels. The MAX986 is powered by the 5V supply voltage, and the pullup resistor for the MAX986's open-drain output is connected to the 3V supply voltage. This configuration allows the full 5V logic swing without creating overvoltage on the 3V logic inputs. For 3V to 5V logic-level translation, simply connect the 3V supply to V_{CC} and the 5V supply to the pullup resistor.

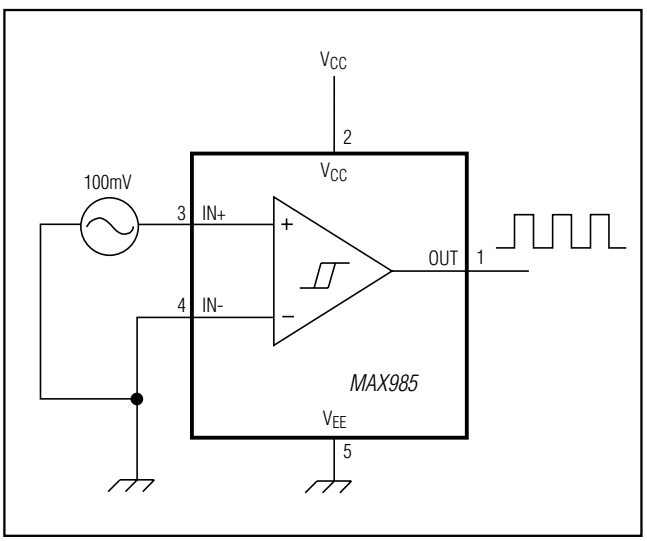

Figure 3. Zero-Crossing Detector

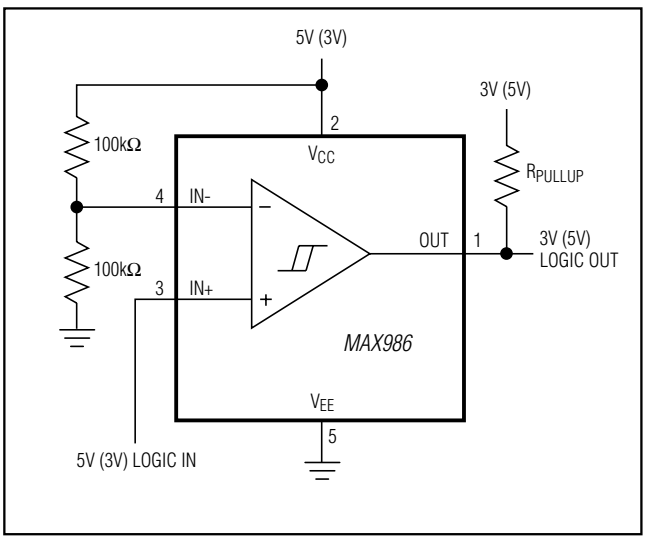

Figure 4. Logic-Level Translator

Typical Application Circuit

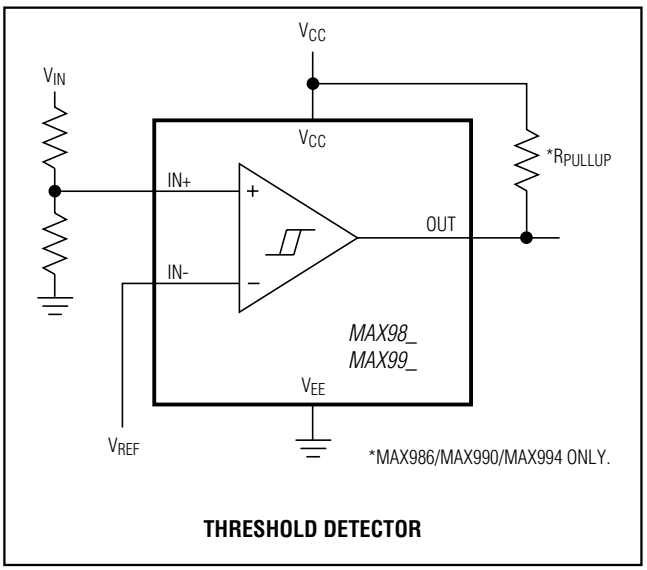

THRESHOLD DETECTOR

Ordering Information (continued)

PART	PIN-PACKAGE	TOP MARK
MAX985EUK+T	5 SOT23	ABYZ
MAX985ESA+	8 SO	—
MAX986EXK+T	5 SC70	ABL
MAX986EUK+T	5 SOT23	ABZA
MAX986ESA+	8 SO	—
MAX989EKA+T	8 SOT23	AADZ
MAX989EUA+T	8 µMAX	—
MAX989ESA+	8 SO	—
MAX990EKA+T	8 SOT23	AAEA
MAX990EUA+T	8 µMAX	—
MAX990ESA+	8 SO	—
MAX993EUD+	14 TSSOP	—
MAX993ESD+	14 SO	—
MAX994EUD+	14 TSSOP	—
MAX994ESD+	14 SO	—

Note: *All devices are specified over the -40°C to +85°C operating temperature range.*
+Denotes a lead(Pb)-free/RoHS-compliant package.
T = Tape and reel.

Pin Configurations (continued)

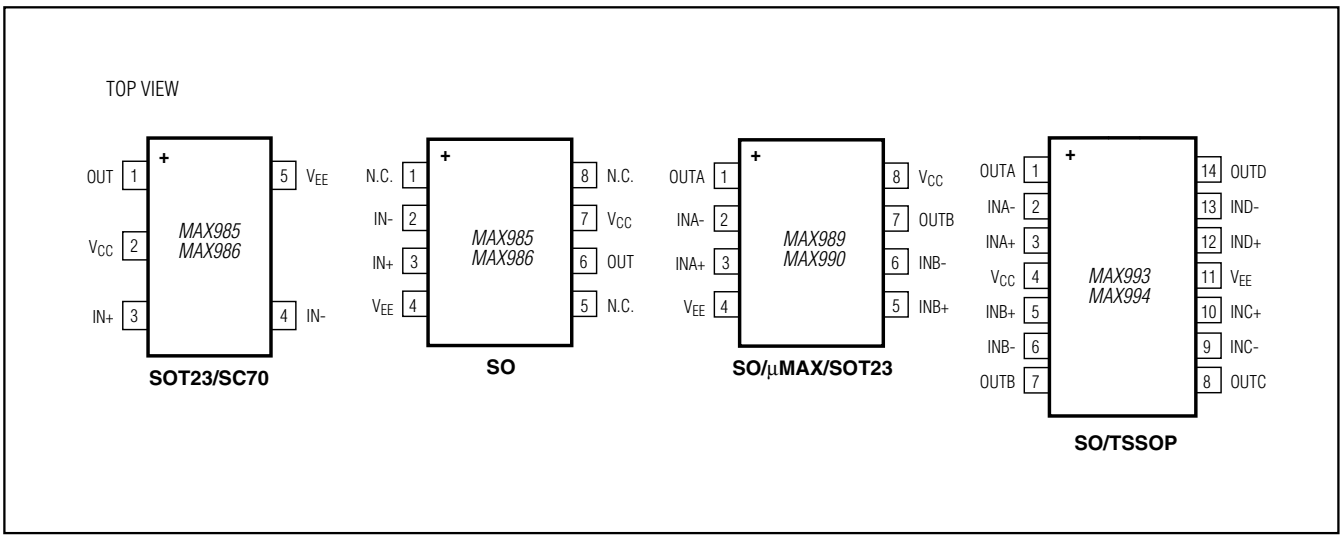

Package Information

For the latest package outline information and land patterns (footprints), go to **www.maximintegrated.com/packages**. Note that a "+", "#", or "-" in the package code indicates RoHS status only. Package drawings may show a different suffix character, but the drawing pertains to the package regardless of RoHS status.

PACKAGE TYPE	PACKAGE CODE	OUTLINE NO.	LAND PATTERN NO.
6 UCSP	B6+3	21-0097	—
5 SOT23	U5+1	21-0057	90-0174
5 SC70	X5+1	21-0076	90-0188
8 SO	S8+2	21-0041	90-0096
8 SOT23	K8+5	21-0078	90-0176
8 µMAX	U8+1	21-0036	90-0092
14 SO	S14+1	21-0041	90-0112
14 TSSOP	U14+1	21-0066	90-0113

Revision History

REVISION NUMBER	REVISION DATE	DESCRIPTION	PAGES CHANGED
5	4/12	Replaced Figure 3, added lead-free compliant packaging info, updated package information, updated *Absolute Maximum Ratings*, rearranged *Pin Description* table	1, 2, 6, 9, 10
6	8/12	Updated *Ordering Information* and Figure 3	1, 9

Maxim Integrated cannot assume responsibility for use of any circuitry other than circuitry entirely embodied in a Maxim Integrated product. No circuit patent licenses are implied. Maxim Integrated reserves the right to change the circuitry and specifications without notice at any time. The parametric values (min and max limits) shown in the Electrical Characteristics table are guaranteed. Other parametric values quoted in this data sheet are provided for guidance.

© 2012 Maxim Integrated Products, Inc. Maxim Integrated and the Maxim Integrated logo are trademarks of Maxim Integrated Products, Inc.