Apacer

RoHS Compliant

M.2 2242 Flash Drive

ST250-M242 Product Specifications

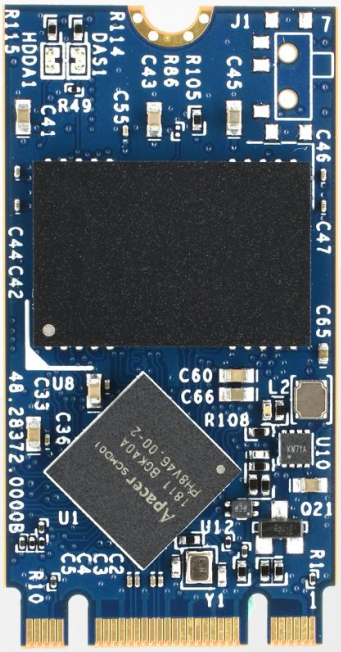

August 12, 2021

Version 1.4

Apacer Technology Inc.

1F, No.32, Zhongcheng Rd., Tucheng Dist., New Taipei City, Taiwan, R.O.C

Tel: +886-2-2267-8000 Fax: +886-2-2267-2261

www.apacer.com

Apacer

Specifications Overview:

- **Compliance with SATA Interface**
  - Serial ATA Revision 3.1
  - SATA 6 Gb/s
  - ATA-8 command set
  - Backward compatible with SATA 1.5/3 Gb/s
- **Capacity**
  - 64, 128, 256, 512 GB
- **Performance***
  - Burst read/write: 600 MB/sec
  - Sequential read: Up to 560 MB/sec
  - Sequential write: Up to 520 MB/sec
  - Random read (4K): Up to 59,000 IOPS
  - Random write (4K): Up to 75,000 IOPS
- **Flash Management**
  - Low-Density Parity-Check (LDPC) Code
  - Global Wear Leveling
  - Flash bad-block management
  - Flash Translation Layer: Page Mapping
  - S.M.A.R.T.
  - DataDefender™
  - Device Sleep
  - ATA Secure Erase
  - TRIM
  - Hyper Cache Technology
  - SAMRT Read Refresh™
- **SATA Power Management Modes**
- **Endurance (in drive writes per day: DWPD)**
  - 64 GB: 3.09 DWPD
  - 128 GB: 3.21 DWPD
  - 256 GB: 3.21 DWPD
  - 512 GB: 3.11 DWPD
- **Temperature Range**
  - Operating: 0°C to 70°C
  - Storage: -40°C to 100°C
- **Supply Voltage**
  - 3.3 V ± 5%
- **Power Consumption***
  - Active mode: 435 mA
  - Idle mode: 65 mA
- **Connector Type**
  - 75-pin SATA-based M.2 module pinout
- **NAND Flash Type:** 3D TLC (BiCS4)
- **MTBF:** >3,000,000 hours
- **Form Factor**
  - M.2 2242-D5-B-M
  - Dimensions: 42.00 x 22.00 x 3.80, unit: mm
  - Net Weight: 3.86g ± 5%
- **Security**
  - AES 256-bit hardware encryption
- **Reliability**
  - Thermal Sensor
  - Thermal Throttling (optional)
  - End-to-End Data Protection
- **RoHS Compliant**

*Varies from capacities. The values for performances and power consumptions presented are typical and may vary depending on flash configurations or platform settings. The term idle refers to the standby state of the device.

© 2021 Apacer Technology Inc.

Table of Contents

1. General Descriptions 4

2. Functional Block 4

3. Pin Assignments 5

4. Product Specifications 8

4.1 Capacity 8

4.2 Performance 8

4.3 Environmental Specifications 9

4.4 Mean Time Between Failures (MTBF) 9

4.5 Certification and Compliance 9

4.6 Endurance 10

4.7 LED Indicator Behavior 10

5. Flash Management 11

5.1 Error Correction/Detection 11

5.2 Bad Block Management 11

5.3 Global Wear Leveling 11

5.4 Flash Translation Layer – Page Mapping 11

5.5 DataDefender™ 11

5.6 ATA Secure Erase 12

5.7 TRIM 12

5.8 Device Sleep (DevSleep or DEVSLP) Mode 12

5.9 SATA Power Management 13

5.10 Hyper Cache Technology 13

5.11 SMART Read Refresh™ 13

6. Security and Reliability Features 14

6.1 Advanced Encryption Standard 14

6.2 Thermal Sensor 14

6.3 Thermal Throttling (optional) 14

6.4 End-to-End Data Protection 14

7. Software Interface 15

7.1 Command Set 15

7.2 S.M.A.R.T. 16

8. Electrical Specifications 18

8.1 Operating Voltage 18

© 2021 Apacer Technology Inc.

8.2 Power Consumption 18

9. Physical Characteristics 19

9.1 Dimensions 19

9.2 Net Weight 19

10. Product Ordering Information 20

10.1 Product Code Designations 20

10.2 Valid Combinations 21

© 2021 Apacer Technology Inc.

1. General Descriptions

Apacer's ST250-M242 is a well-balanced solid-state disk (SSD) drive with standard form factor and great performance. Designed in SATA 6 Gb/s interface, the SSD is able to deliver exceptional read/write speed, making it the ideal companion for heavy-loading industrial or server operations.

ST250-M242 utilizes 3D NAND for higher capacity up to 512GB and provides more power efficiency than 2D NAND. Regarding reliability, ST250-M242 is implemented with LDPC (Low Density Parity Check) ECC engine to extend SSD endurance and increase data reliability. In addition, the drive comes with various implementations including powerful hardware ECC engine, power saving modes, wear leveling, flash block management, S.M.A.R.T., TRIM, and DataDefender.

In terms of security, Advanced Encryption Standard (AES) ensures data security and provides users with a peace of mind knowing their data is safeguarded. Regarding reliability, data integrity can be assured at multiple points in the path to enable reliable delivery of data transfers with End-to-End Data Protection.

2. Functional Block

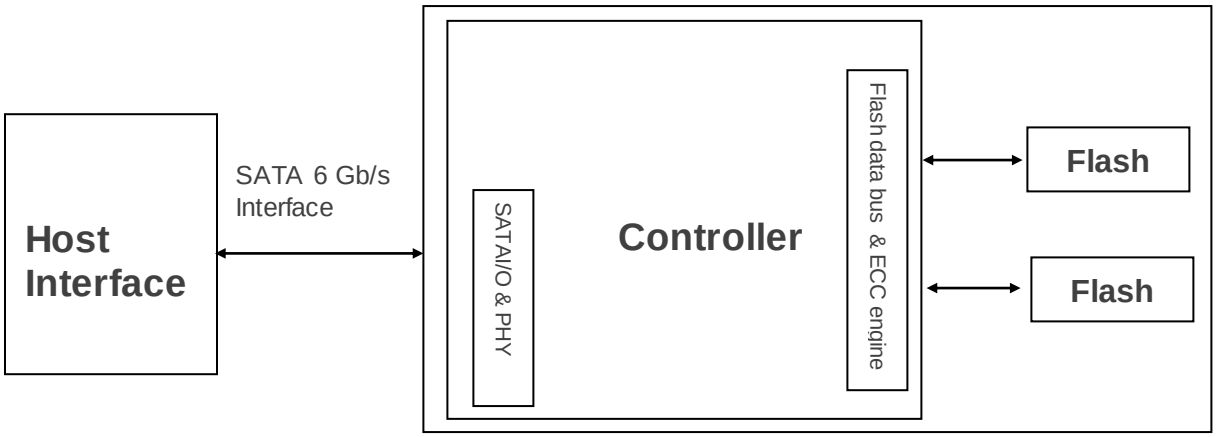

Figure 2-1 Block Diagram

© 2021 Apacer Technology Inc.

3. Pin Assignments

This connector does not support hot plug capability. There are a total of 75 pins. 12 pin locations are used for mechanical key locations; this allows such a module to plug into both Key B and Key M connectors.

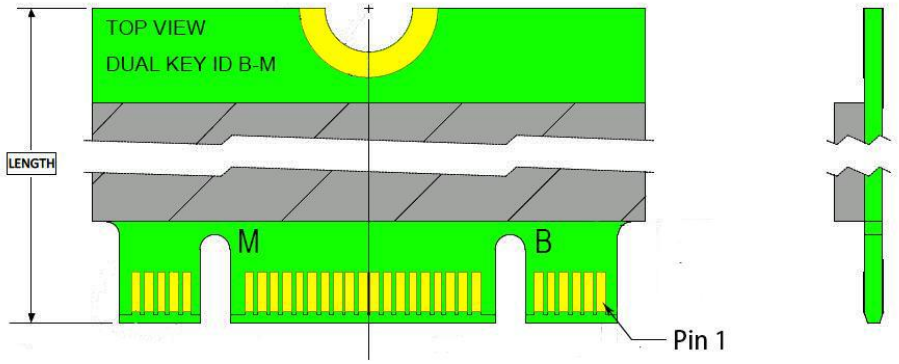

Table 3-1 Pin Assignments

Pin	Type	Description
1	CONFIG_3	Ground (according to M.2 configurations for SSD-SATA definition)
2	3.3V	Supply Pin, 3.3V
3	GND	Ground
4	3.3V	Supply pin, 3.3V
5	No connect	No connect*
6	Not available	No connect*
7	Not available	No connect*
8	Not available	No connect*
9	No connect	No connect*
10	DAS/DSS	Device Activity Signal/Disable Staggered Spin-up
11	No connect	No connect*
12	(removed for key)	Mechanical notch B
13	(removed for key)	Mechanical notch B
14	(removed for key)	Mechanical notch B
15	(removed for key)	Mechanical notch B
16	(removed for key)	Mechanical notch B
17	(removed for key)	Mechanical notch B
18	(removed for key)	Mechanical notch B
19	(removed for key)	Mechanical notch B
20	Not available	No connect*
21	CONFIG_0	Ground (according to M.2 configurations for SSD-SATA definition)
22	Not available	No connect*
23	Not available	No connect*
24	Not available	No connect*
25	Not available	No connect*
26	Not available	No connect*
27	GND	Ground
28	Not available	No connect*
29	PERn1	No connect*
30	Not available	No connect*
31	PERp1	No connect*
32	Not available	No connect*
33	GND	Ground
34	Not available	No connect*

© 2021 Apacer Technology Inc.

Table 3-1 Pin Assignments

Pin	Type	Description
35	PETn1	No connect*
36	Not available	No connect*
37	PETp1	No connect*
38	DEVSLP	Device Sleep, input. If driven high the host is informing the SSD to enter a low power state
39	GND	Ground
40	Not available	No connect*
41	SATA-Rx+	Host receiver differential signal pair
42	Not available	No connect*
43	SATA-Rx-	Host receiver differential signal pair
44	Not available	No connect*
45	GND	Ground
46	Not available	No connect*
47	SATA-Tx-	Host transmitter differential pair
48	Not available	No connect*
49	SATA-Tx+	Host transmitter differential pair
50	PERST#	No connect*
51	GND	Ground
52	CLKREQ#	No connect*
53	REFCLKN	No connect*
54	PEWAKE#	No connect*
55	REFCLKP	No connect*
56	MFG1	No connect*
57	GND	Ground
58	MFG2	No connect*
59	(removed for key)	Mechanical notch M
60	(removed for key)	Mechanical notch M
61	(removed for key)	Mechanical notch M
62	(removed for key)	Mechanical notch M
63	(removed for key)	Mechanical notch M
64	(removed for key)	Mechanical notch M
65	(removed for key)	Mechanical notch M
66	(removed for key)	Mechanical notch M
67	Not available	No connect*
68	SUSCLK	No connect*
69	CONFIG_1	Ground
70	3.3V	Supply pin, 3.3V
71	GND	Ground
72	3.3V	Supply pin, 3.3V
73	GND	Ground
74	3.3V	Supply pin, 3.3V
75	CONFIG_2	Ground

*Reserved by Apacer, please do not connect on a host.

© 2021 Apacer Technology Inc.

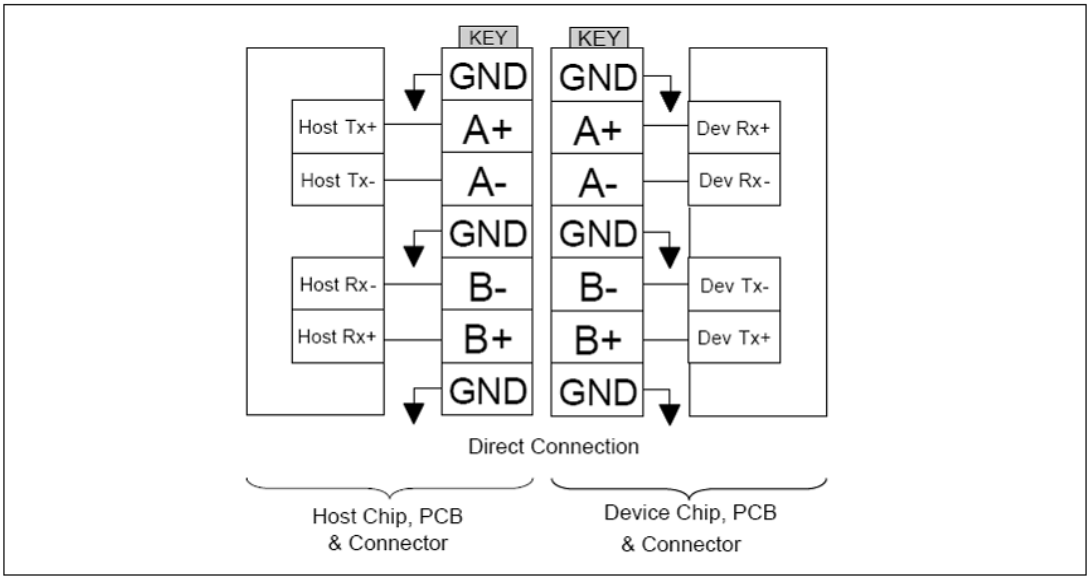

Figure 3-1 Direct Connection between the Host and Device

© 2021 Apacer Technology Inc.

4. Product Specifications

4.1 Capacity

Capacity specifications of ST250-M242 are available as shown in Table 4-1. It lists the specific capacity and the default numbers of heads, sectors and cylinders for each product line.

Table 4-1 Capacity Specifications

Capacity	Total bytes*	Cylinders	Heads	Sectors	Total LBA
64 GB	60,022,480,896	16,383	16	63	117,231,408
128 GB	120,034,123,776	16,383	16	63	234,441,648
256 GB	240,057,409,536	16,383	16	63	468,862,128
512 GB	480,103,981,056	16,383	16	63	937,703,088

*Display of total bytes varies from file systems, which means not all of the bytes can be used for storage.
**Notes: 1 GB = 1,000,000,000 bytes; 1 sector = 512 bytes.
LBA count addressed in the table above indicates total user storage capacity and will remain the same throughout the lifespan of the device. However, the total usable capacity of the SSD is most likely to be less than the total physical capacity because a small portion of the capacity is reserved for device maintenance usages.

4.2 Performance

Performance of ST250-M242 is listed below in Table 4-2.

Table 4-2-1 Performance Specifications

Performance \ Capacity	64 GB	128 GB	256 GB	512 GB
Sequential Read* (MB/s)	475	560	560	560
Sequential Write* (MB/s)	310	500	470	520
Random Read IOPS (4K)**	16,000	39,000	33,000	59,000
Random Write IOPS (4K)**	64,000	75,000	71,000	73,000

Note:
Results may differ from various flash configurations or host system setting.
*Sequential performance is based on CrystalDiskMark 5.2.1 with file size 1,000MB.
**Random performance measured using IOMeter with Queue Depth 32.

© 2021 Apacer Technology Inc.

4.3 Environmental Specifications

Environmental specifications of ST250-M242 product are shown in Table 4-3.

Table 4-3 Environmental Specifications

Item	Specifications
Operating temp.	0°C to 70°C
Non-operating temp.	-40°C to 100°C
Operating vibration	7.69 GRMS, 20~2000 Hz/random (compliant with MIL-STD-810G)
Non-operating vibration	4.02 GRMS, 15~2000 Hz/random (compliant with MIL-STD-810G)
Operating shock	50G, 11ms
Non-operating shock	1500G, 0.5ms (compliant with MIL-STD-883K)

Note: This Environmental Specification table indicates the conditions for testing the device. Real w orld usages may affect the results.

4.4 Mean Time Between Failures (MTBF)

Mean Time Between Failures (MTBF) is predicted based on reliability data for the individual components in ST250-M242. The prediction result for ST250-M242 is more than 3,000,000 hours.

Note: The MTBF is predicated and calculated based on “Telcordia Technologies Special Report, SR-332, Issue 3” method.

4.5 Certification and Compliance

ST250-M242 complies with the following standards:

- CE
- FCC
- RoHS Recast
- MIL-STD-810

© 2021 Apacer Technology Inc.

4.6 Endurance

The endurance of a storage device is predicted by Drive Writes Per Day based on several factors related to usage, such as the amount of data written into the drive, block management conditions, and daily workload for the drive. Thus, key factors, such as Write Amplifications and the number of P/E cycles, can influence the lifespan of the drive.

Table 4-4 Drive Writes Per Day

Capacity	Drive Writes Per Day
64 GB	3.09
128 GB	3.21
256 GB	3.21
512 GB	3.11

Note:

- This estimation complies with JEDEC JESD-219, enterprise endurance workload of random data with payload size distribution.
- Flash vendor guaranteed 3D NAND TLC P/E cycle: 3K
- WAF may vary from capacity, flash configurations and writing behavior on each platform.
- 1 Terabyte = 1,024 GB
- DWPD (Drive Write Per Day) is calculated based on the number of times that user overwrites the entire capacity of an SSD per day of its lifetime during the warranty period. (3D NAND TLC warranty: 2 years)

4.7 LED Indicator Behavior

The behavior of the ST250-M242 LED indicators is described in Table 4-5.

Table 4-5 LED Behavior

Location	LED	Description
LED A	HDDA1	LED blinks when the drive is being accessed

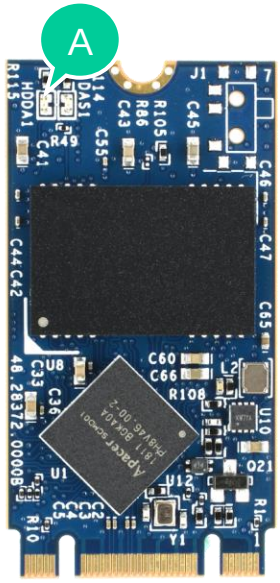

© 2021 Apacer Technology Inc.

5. Flash Management

5.1 Error Correction/Detection

ST250-M242 implements a hardware ECC scheme, based on the Low Density Parity Check (LDPC). LDPC is a class of linear block error correcting code which has apparent coding gain over BCH code because LDPC code includes both hard decoding and soft decoding algorithms. With the error rate decreasing, LDPC can extend SSD endurance and increase data reliability while reading raw data inside a flash chip.

5.2 Bad Block Management

Current production technology is unable to guarantee total reliability of NAND flash memory array. When a flash memory device leaves factory, it comes with a minimal number of initial bad blocks during production or out-of-factory as there is no currently known technology that produce flash chips free of bad blocks. In addition, bad blocks may develop during program/erase cycles. Since bad blocks are inevitable, the solution is to keep them in control. Apacer flash devices are programmed with ECC, page mapping technique and S.M.A.R.T to reduce invalidity or error. Once bad blocks are detected, data in those blocks will be transferred to free blocks and error will be corrected by designated algorithms.

5.3 Global Wear Leveling

Flash memory devices differ from Hard Disk Drives (HDDs) in terms of how blocks are utilized. For HDDs, when a change is made to stored data, like erase or update, the controller mechanism on HDDs will perform overwrites on blocks. Unlike HDDs, flash blocks cannot be overwritten and each P/E cycle wears down the lifespan of blocks gradually. Repeatedly program/erase cycles performed on the same memory cells will eventually cause some blocks to age faster than others. This would bring flash storages to their end of service term sooner. Global wear leveling is an important mechanism that levels out the wearing of all blocks so that the wearing-down of all blocks can be almost evenly distributed. This will increase the lifespan of SSDs.

5.4 Flash Translation Layer – Page Mapping

Page mapping is an advanced flash management technology whose essence lies in the ability to gather data, distribute the data into flash pages automatically, and then schedule the data to be evenly written. Page-level mapping uses one page as the unit of mapping. The most important characteristic is that each logical page can be mapped to any physical page on the flash memory device. This mapping algorithm allows different sizes of data to be written to a block as if the data is written to a data pool and it does not need to take extra operations to process a write command. Thus, page mapping is adopted to increase random access speed and improve SSD lifespan, reduce block erase frequency, and achieve optimized performance and lifespan.

5.5 DataDefender™

Apacer's DataDefender combines both firmware and hardware mechanisms to ensure data integrity. When power disruption occurs, the hardware mechanism will notice and trigger the controller to run multiple write-to-flash cycles to store data. Then the firmware will check that the data was correctly written to the NAND flash after the power disruption, preventing data loss.

© 2021 Apacer Technology Inc.

5.6 ATA Secure Erase

ATA Secure Erase is an ATA disk purging command currently embedded in most of the storage drives. Defined in ATA specifications, (ATA) Secure Erase is part of Security Feature Set that allows storage drives to erase all user data areas. The erase process usually runs on the firmware level as most of the ATA-based storage media currently in the market are built-in with this command. ATA Secure Erase can securely wipe out the user data in the drive and protects it from malicious attack.

5.7 TRIM

TRIM is a SATA command that helps improve the read/write performance and efficiency of solid-state drives (SSD). The command enables the host operating system to inform SSD controller which blocks contain invalid data, mostly because of the erase commands from host. The invalid will be discarded permanently and the SSD will retain more space for itself.

5.8 Device Sleep (DevSleep or DEVSLP) Mode

Device Sleep is a feature that allows SATA devices to enter a low power mode by designating a particular pin as DEVSLP signal with an aim to reducing power consumption.

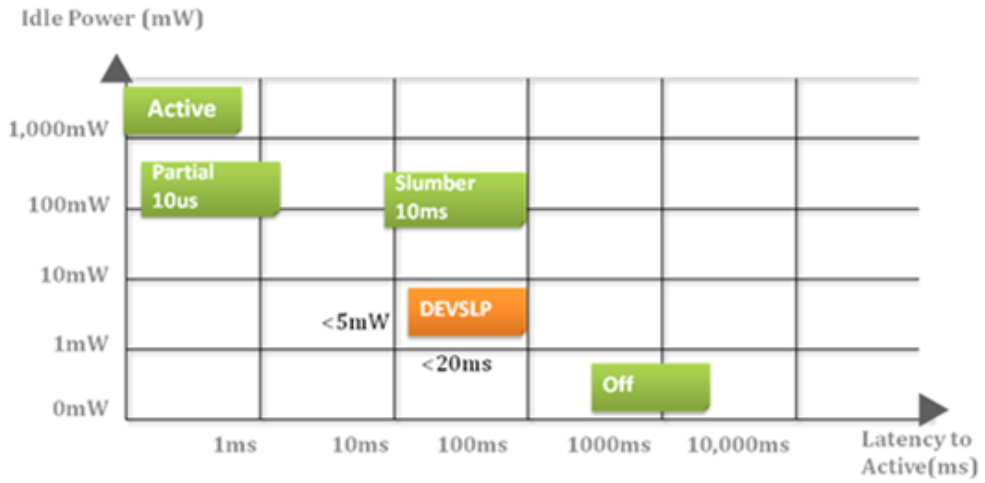

© 2021 Apacer Technology Inc.

5.9 SATA Power Management

By complying with SATA 6 Gb/s specifications, the SSD supports the following SATA power saving modes:

- ACTIVE: PHY ready, full power, TX & RX operational
- PARTIAL: Reduces power, resumes in under 10 µs (microseconds)
- SLUMBER: Reduces power, resumes in under 10 ms (milliseconds)
- HIPM: Host-Initiated Power Management
- DIPM: Device-Initiated Power Management
- AUTO-SLUMBER: Automatic transition from partial to slumber.
- Device Sleep: PHY powered down; power consumption ≦ 5 mW; host assertion time ≦ 10 ms; exit timeout from this state ≦ 20 ms (unless specified otherwise in SATA Identify Device Log).

Note: The behaviors of power management features would depend on host/device settings.

5.10 Hyper Cache Technology

Apacer proprietary Hyper Cache technology uses a portion of the available capacity as SLC (1bit-per-cell) NAND flash memory, called Hyper cache mode. When data is written to SSD, the firmware will direct the data to Hyper Cache mode, providing excellent performance to handle various scenarios in industrial use.

5.11 SMART Read Refresh™

Apacer's SMART Read Refresh plays a proactive role in avoiding read disturb errors from occurring to ensure health status of all blocks of NAND flash. Developed for read-intensive applications in particular, SMART Read Refresh is employed to make sure that during read operations, when the read operation threshold is reached, the data is refreshed by re-writing it to a different block for subsequent use.

© 2021 Apacer Technology Inc.

6. Security and Reliability Features

6.1 Advanced Encryption Standard

Advanced Encryption Standard (AES) is a specification for the encryption of electronic data. AES has been adopted by the U.S. government since 2001 to protect classified information and is now widely implemented in embedded computing applications. The AES algorithm used in software and hardware is symmetric so that encrypting/decrypting requires the same encryption key. Without the key, the encrypted data is inaccessible to ensure information security.

Notably in flash memory applications, AES 256-bit hardware encryption is the mainstream to protect sensitive or confidential data. The hardware encryption provides better performance, reliability, and security than software encryption. It uses a dedicated processor, which is built inside the controller, to process the encryption and decryption. This enormously shortens the processing time and makes it efficient.

6.2 Thermal Sensor

Apacer Thermal Sensor is a digital temperature sensor with serial interface. By using a designated pin for transmission, storage device owners are able to read temperature data.

6.3 Thermal Throttling (optional)

Thermal throttling can monitor the temperature of the SSD equipped with a built-in thermal sensor via S.M.A.R.T. commands. This method can ensure the temperature of the device stays within temperature limits by drive throttling, i.e. reducing the speed of the drive when the device temperature reaches the threshold level, so as to prevent overheating, guarantee data reliability, and prolong product lifespan. When the temperature exceeds the maximum threshold level, thermal throttling will be triggered to reduce performance step by step to prevent hardware components from being damaged. Performance is only permitted to drop to the extent necessary for recovering a stable temperature to cool down the device's temperature. Once the temperature decreases to the minimum threshold value, transfer speeds will rise back to its optimum performance level.

6.4 End-to-End Data Protection

End-to-End Data Protection is a feature implemented in Apacer SSD products that extends error control to cover the entire path from the host computer to the drive and back, and ensure data integrity at multiple points in the path to enable reliable delivery of data transfers. Unlike ECC which does not exhibit the ability to determine the occurrence of errors throughout the process of data transmission, End-to-End Data Protection allows SSD controller to identify an error created anywhere in the path and report the error to the host computer before it is written to the drive. This error-checking and error-reporting mechanism therefore guarantees the trustworthiness and reliability of the SSD.

© 2021 Apacer Technology Inc.

7. Software Interface

7.1 Command Set

Table 7-1 summarizes the ATA commands supported by ST250-M242.

Table 7-1 Command Set

Code	Command	Code	Command
E5h	CHECK POWER MODE	F4h	SECURITY ERASE UNIT
06h	DATA SET MANAGEMENT	F5h	SECURITY FREEZE LOCK
92h	DOWNLOAD MICROCODE	F1h	SECURITY SET PASSWORD
90h	EXECUTE DEVICE DIAGNOSTIC	F2h	SECURITY UNLOCK
E7h	FLUSH CACHE	70h	SEEK
EAh	FLUSH CACHE EXT	EFh	SET FEATURES
ECh	IDENTIFY DEVICE	C6h	SET MULTIPLE MODE
E3h	IDLE	E6h	SLEEP
E1h	IDLE IMMEDIATE	B0h	SMART
91h	INITIALIZE DEVICE PARAMETERS	E2h	STANDBY
E4h	READ BUFFER	E0h	STANDBY IMMEDIATE
C8h	READ DMA	E8h	WRITE BUFFER
25h	READ DMA EXT	CAh	WRITE DMA
60h	READ FPDMA QUEUED	35h	WRITE DMA EXT
C4h	READ MULTIPLE	3Dh	WRITE DMA FUA EXT
29h	READ MULTIPLE EXT	61h	WRITE FPDMA QUEUED
2Fh	READ LOG EXT	3Fh	WRITE LOG EXT
47h	READ LOG DMA EXT	57h	WRITE LOG DMA EXT
20h	READ SECTOR	C5h	WRITE MULTIPLE
24h	READ SECTOR EXT	39h	WRITE MULTIPLE EXT
40h	READ VERIFY SECTORS	CEh	WRITE MULTIPLE FUA EXT
42h	READ VERIFY SECTORS EXT	30h	WRITE SECTOR
10h	RECALIBRATE	34h	WRITE SECTOR EXT
F6h	SECURITY DISABLE PASSWORD	45h	WRITE UNCORRECTABLE EXT
F3h	SECURITY ERASE PREPARE		

© 2021 Apacer Technology Inc.

7.2 S.M.A.R.T.

S.M.A.R.T. is an abbreviation for Self-Monitoring, Analysis and Reporting Technology, a self-monitoring system that provides indicators of drive health as well as potential disk problems. It serves as a warning for users from unscheduled downtime by monitoring and displaying critical drive information. Ideally, this should allow taking proactive actions to prevent drive failure and make use of S.M.A.R.T. information for future product development reference.

Apacer devices use the standard SMART command B0h to read data out from the drive to activate our S.M.A.R.T. feature that complies with the ATA/ATAPI specifications. S.M.A.R.T. Attribute IDs shall include initial bad block count, total later bad block count, maximum erase count, average erase count, power on hours and power cycle. When the S.M.A.R.T. Utility running on the host, it analyzes and reports the disk status to the host before the device reaches in critical condition.

Note: Attribute IDs may vary from product models due to various solution design and supporting capabilities.

Apacer memory products come with S.M.A.R.T. commands and subcommands for users to obtain information of drive status and to predict potential drive failures. Users can take advantage of the following commands/subcommands to monitor the health of the drive.

Table 7-2 SMART Subcommand Set

Code	SMART Subcommand
D0h	READ DATA
D1h	READ ATTRIBUTE THRESHOLDS
D2h	ENABLE/DISABLE ATTRIBUTE AUTOSAVE
D4h	EXECUTE OFF-LINE IMMEDIATE
D5h	SMART READ LOG
D6h	SMART WRITE LOG
D8h	ENABLE OPERATIONS
D9h	DISABLE OPERATIONS
DAh	RETURN STATUS

Table 7-3 General SMART Attribute Structure

Byte	Description
0	ID (Hex)
1 – 2	Status Flag
3	Value
4	Worst
5*-11	Raw Data

*Byte 5: LSB

© 2021 Apacer Technology Inc.

Table 7-4 SMART Attribute ID List

ID (Hex)	Attribute Name
9 (0x09)	Power-on Hours
12 (0x0C)	Power Cycle Count
163 (0xA3)	Max. Erase Count
164 (0xA4)	Avg. Erase Count
166 (0xA6)	Total Later Bad Block Count
167 (0xA7)	SSD Protect Mode (Vendor Specific)
168 (0xA8)	SATA PHY Error Count
171 (0xAB)	Program Fail Count
172 (0xAC)	Erase Fail Count
175 (0xAF)	Bad Cluster Table Count
192 (0xC0)	Unexpected Power Loss Count
194 (0xC2)	Temperature
231 (0xE7)	Lifetime Left
241 (0xF1)	Total Sectors of Write

© 2021 Apacer Technology Inc.

8. Electrical Specifications

8.1 Operating Voltage

Table 8-1 lists the supply voltage for ST250-M242.

Table 8-1 Operating Range

Item	Range
Supply Voltage	3.3V ± 5%

8.2 Power Consumption

Table 8-2 lists the power consumption for ST250-M242.

Table 8-2 Power Consumption

Capacity / Mode	64 GB	128 GB	256 GB	512 GB
Active (mA)	345	395	430	435
Idle (mA)	65	65	65	65

Note:
*All values are typical and may vary depending on flash configurations or host system settings.
**Active power is an average power measurement performed using CrystalDiskMark with 128KB sequential read/write transfers.

© 2021 Apacer Technology Inc.

9. Physical Characteristics

9.1 Dimensions

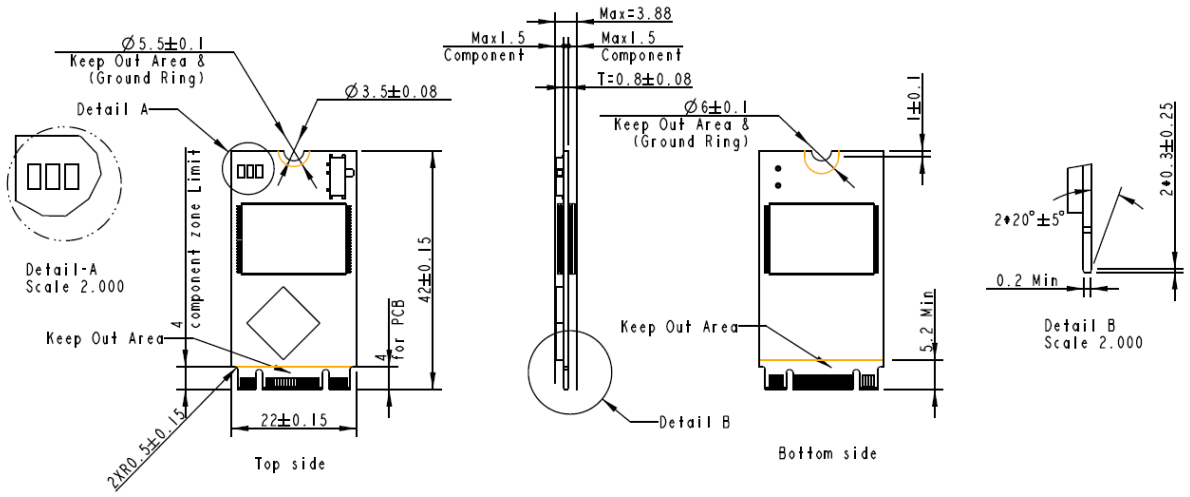

Figure 9-1 Physical Dimensions

9.2 Net Weight

Table 9-1 Net Weight

Capacity	Net Weight (g ± 5%)
64GB	3.4
128GB	3.84
256GB	3.86
512GB	3.54

© 2021 Apacer Technology Inc.

10. Product Ordering Information

10.1 Product Code Designations

Code	1	2	3	4	5	6	7	8	9	10	11	12	13	14	15	16
	A	3	2	.	2	5	C	X	G	B	.	X	X	X	7	8

Code 1-3 (Product Line & Form Factor)	SATA + M.2242
Code 5-6 (Model/Solution)	ST250
Code 7-8 (Product Capacity)	CG: 64GB CH: 128GB CJ: 256GB CK: 512GB
Code 9 (Flash Type & Product Temp)	3D TLC Standard temperature
Code 10 (Product Spec)	Double side B+M key
Code 12-14 (Version Number)	Random numbers generated by system
Code 15-16 (Firmware Version)	Thermal Sensor DEVSLP

© 2021 Apacer Technology Inc.

10.2 Valid Combinations

Capacity	Part Number
64GB	A32.25CGGB.00178
128GB	A32.25CHGB.00178
256GB	A32.25CJGB.00178
512GB	A32.25CKGB.00178

Note: Valid combinations are those products in mass production or will be in mass production. Consult your Apacer sales representative to confirm availability of valid combinations and to determine availability of new combinations.

© 2021 Apacer Technology Inc.

Revision History

Revision	Description	Date
1.0	Initial release	9/17/2020
1.1	Added 256-512GB support	10/8/2020
1.2	- Updated endurance rating for 512GB at the Endurance section on Specifications Overview page and 4.6 Endurance - Updated 10. Product Ordering Information due to firmware change	12/7/2020
1.3	- Added AES to Specifications Overview - Updated 1. General Descriptions by adding AES support - Added 6.1 Advanced Encryption Standard	7/16/2021
1.4	Updated notes regarding P/E cycle and warranty period at 4.6 Endurance	8/12/2021

© 2021 Apacer Technology Inc.

Global Presence

Taiwan (Headquarters)
Apacer Technology Inc.
1F., No.32, Zhongcheng Rd., Tucheng Dist.,
New Taipei City 236, Taiwan R.O.C.
Tel: 886-2-2267-8000
Fax: 886-2-2267-2261
amtsales@apacer.com

U.S.A.
Apacer Memory America, Inc.
46732 Lakeview Blvd., Fremont, CA 94538
Tel: 1-408-518-8699
Fax: 1-510-249-9551
sa@apacerus.com

Japan
Apacer Technology Corp.
6F, Daiyontamachi Bldg., 2-17-12, Shibaura, Minato-Ku,
Tokyo, 108-0023, Japan
Tel: 81-3-5419-2668
Fax: 81-3-5419-0018
jpservices@apacer.com

Europe
Apacer Technology B.V.
Science Park Eindhoven 5051 5692 EB Son,
The Netherlands
Tel: 31-40-267-0000
Fax: 31-40-290-0686
sales@apacer.nl

China
Apacer Electronic (Shanghai) Co., Ltd
Room D, 22/FL, No.2, Lane 600, JieyunPlaza,
Tianshan RD, Shanghai, 200051, China
Tel: 86-21-6228-9939
Fax: 86-21-6228-9936
sales@apacer.com.cn

India
Apacer Technologies Pvt Ltd,
1874, South End C Cross, 9th Block Jayanagar,
Bangalore-560069, India
Tel: 91-80-4152-9061/62
Fax: 91-80-4170-0215
sales_india@apacer.com

© 2021 Apacer Technology Inc.