Apacer

RoHS Recast Compliant

M.2 2280 Flash Drive

SV240-M280 BiCS5 Product Specifications

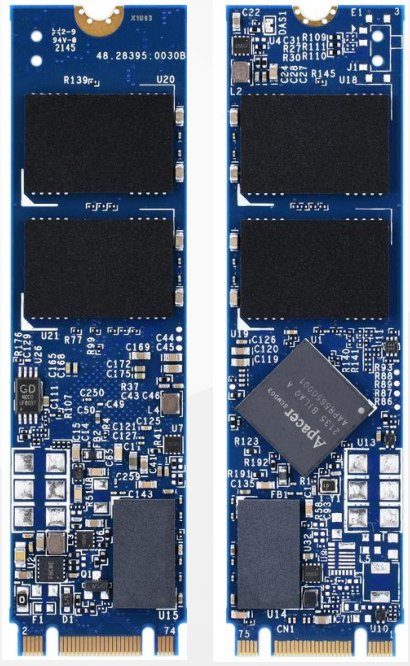

August 24, 2022

Version 1.1

Apacer Technology Inc.

1F, No.32, Zhongcheng Rd., Tucheng Dist., New Taipei City, Taiwan, R.O.C

Tel: +886-2-2267-8000 Fax: +886-2-2267-2261

www.apacer.com

Apacer

Specifications Overview:

- **Compliance with SATA Interface 3.2**
  - SATA 6 Gb/s interface
  - Backward compatible with SATA 1.5 and 3 Gb/s interfaces
  - ATA command set-4 (ACS-4)
- **Capacity**
  - 240, 480, 960, 1920 GB
- **Performance**[1]
  - Burst read/write: 600 MB/sec
  - Sequential read: Up to 560 MB/sec
  - Sequential write: Up to 500 MB/sec
  - Random read (4K): Up to 95,000 IOPS
  - Random write (4K): Up to 84,000 IOPS
- **Flash Management**
  - Low-Density Parity-Check (LDPC) Code
  - Global Wear Leveling
  - Flash bad-block management
  - Flash Translation Layer: Page Mapping
  - S.M.A.R.T.
  - DataDefender™
  - ATA Secure Erase
  - Device Sleep
  - TRIM
  - Hyper Cache Technology
  - Over-provisioning
  - DataRAID™
  - SMART Read Refresh™
- **NAND Flash Type:** 3D TLC (BiCS5)
- **MTBF:** >3,000,000 hours
- **Endurance (in drive writes per day: DWPD)**
  - 240 GB: 2.20 DWPD
  - 480 GB: 2.20 DWPD
  - 960 GB: 2.25 DWPD
  - 1920 GB: 2.23 DWPD
- **Temperature Range**
  - Operating:
    Standard: 0°C to 70°C
    Wide: -40°C to 85°C
  - Storage: -55°C to 100°C
- **Supply Voltage**
  - 3.3 V ± 5%
- **Power Consumption**[1]
  - Active mode: 625 mA
  - Idle mode: 95 mA
- **SATA Power Management Modes**
- **DRAM Cache for Enhanced Random Performance**
- **Connector Type**
  - 75-pin SATA-based M.2 module pinout
- **Form Factor**
  - M.2 2280-D5-B-M
  - Dimensions: 22.00 x 80.00 x 3.88, unit: mm
  - Net weight: 7.61g ± 5%
- **Security**
  - AES 256-bit hardware encryption
  - Trusted Computing Group (TCG) Opal 2.0 (optional)
- **Reliability**
  - Thermal Sensor
  - End-to-End Data Protection
- **LED Indicators for Drive Behavior**
- **RoHS Recast Compliant (Complies with 2011/65/EU Standard)**

Note:
1. Varies from capacities. The values for performances and power consumptions presented are typical and may vary depending on flash configurations or platform settings. The term idle refers to the standby state of the device.

© 2022 Apacer Technology Inc.

Table of Contents

1. General Description 4

2. Functional Block 4

3. Pin Assignments 5

4. Product Specifications 8

4.1 Capacity 8
4.2 Performance 8
4.3 Environmental Specifications 9
4.4 Mean Time Between Failures (MTBF) 9
4.5 Certification and Compliance 9
4.6 Endurance 9
4.7 LED Indicator Behavior 10

5. Flash Management 11

5.1 Error Correction/Detection 11
5.2 Bad Block Management 11
5.3 Global Wear Leveling 11
5.4 Flash Translation Layer – Page Mapping 11
5.5 ATA Secure Erase 11
5.6 DataDefender™ 12
5.7 TRIM 12
5.8 Device Sleep (DevSleep or DEVSLP) Mode 12
5.9 Hyper Cache Technology 12
5.10 Over-provisioning 13
5.11 SATA Power Management 13
5.12 DataRAID™ 13
5.13 SMART Read Refresh™ 13

6. Security and Reliability Features 14

6.1 Advanced Encryption Standard 14
6.2 TCG Opal (optional) 14
6.3 End-to-End Data Protection 14
6.4 Thermal Sensor 14

7. Software Interface 15

7.1 Command Set 15

© 2022 Apacer Technology Inc.

7.2 S.M.A.R.T. 16

8. Electrical Specifications 18

8.1 Operating Voltage 18

8.2 Power Consumption 18

9. Mechanical Specifications 19

9.1 Dimensions 19

9.2 Net Weight 19

10. Product Ordering Information 20

10.1 Product Code Designations 20

10.2 Valid Combinations 21

© 2022 Apacer Technology Inc.

1. General Description

Apacer's SV240-M280 is the next generation Solid State Drive (SSD) with compact and removable storage to support larger, faster hosts deployed in a wide range of applications that require outstanding performance. Designed with SATA-based connector pinouts and in SATA 6 Gb/s interface, SV240-M280 provides full compliance with the latest SATA Revision 3.2 interface specifications and delivers exceptional performance, reaching up to 560/500 MB/s and 95,000/84,000 in sequential and IOPS read/write. Random performance is further enhanced by engineering the internal controlling unit of the SSD with DRAM, making it the leading add-in storage solution for future host computing systems.

SV240-M280 utilizes 3D NAND for higher capacity up to 1920GB and provides more power efficiency than 2D NAND. Regarding reliability, SV240-M280 is built with a powerful SATA controller that supports on-the-module ECC as well as efficient wear leveling scheme and implemented with LDPC (Low Density Parity Check) ECC engine to extend SSD endurance and increase data reliability. Furthermore, SV240-M280 is equipped with a built-in thermal sensor to monitor the temperature of the SSD via S.M.A.R.T commands to prevent overheating. Operating under 6 Gb/s interface, SV240-M280 is provided with Apacer latest S.M.A.R.T. that is primarily oriented for the latest SATA interface SSD, for drive lifetime monitoring and analysis. For highly-intensive applications, End-to-End Data Protection ensures that data integrity can be assured at multiple points in the path to enable reliable delivery of data transfers.

Security-wise, Advanced Encryption Standard (AES) and Trusted Computing Group (TCG) Opal ensure data security and provide users with peace of mind knowing their data is safeguarded against unauthorized use at all times. SV240-M280 also adopts the latest page mapping file translation layer and comes with various implementations including power saving modes, wear leveling, flash block management, S.M.A.R.T., TRIM, Hyper Cache technology, over-provisioning, DataDefender™, DataRAID™ and SMART Read Refresh™.

2. Functional Block

Apacer SV240-M280 includes a single-chip controller designed with a DRAM and flash media. The controller integrates the flash management unit to support multi-channel, multi-bank flash arrays. Figure 2-1 shows the functional block diagram.

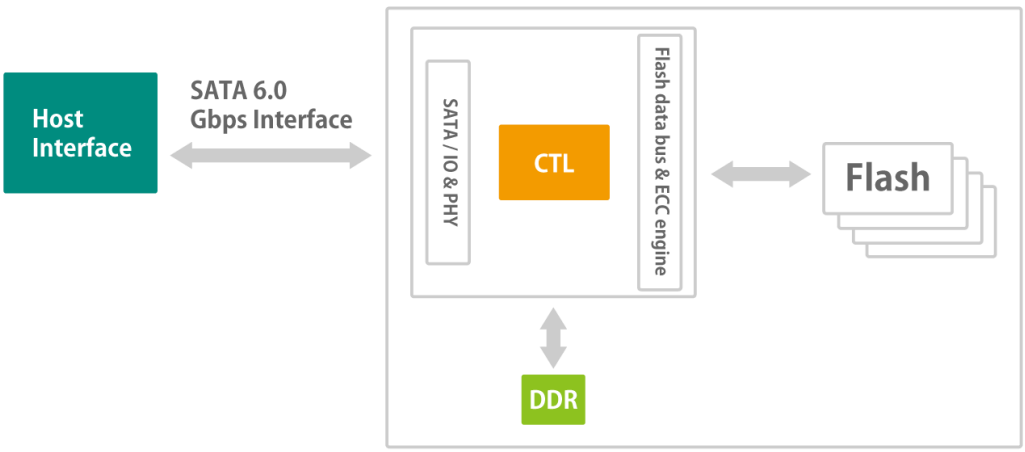

Figure 2-1 Functional Block Diagram

© 2022 Apacer Technology Inc.

3. Pin Assignments

This connector does not support hot plug capability. There are a total of 75 pins. 12 pin locations are used for mechanical key locations; this allows such a module to plug into both Key B and Key M connectors.

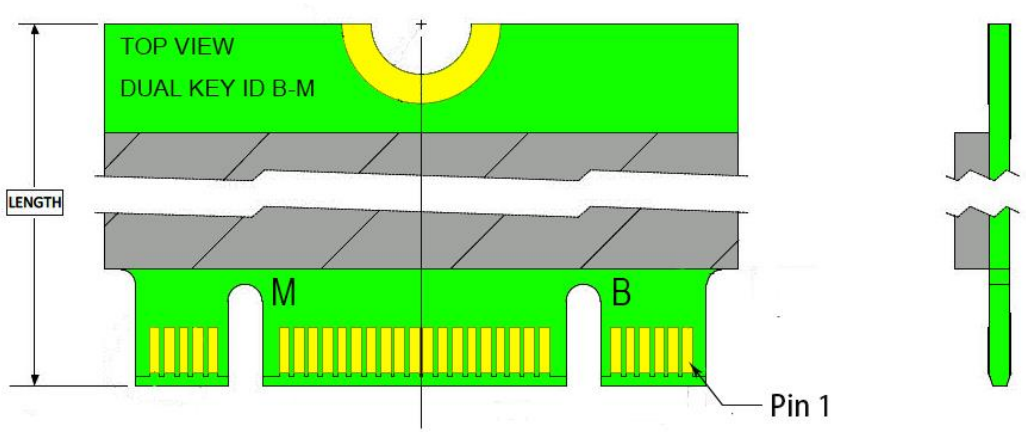

Figure 3-1 SATA Connectors

Table 3-1 Pin Assignments

Pin	Type	Description
1	CONFIG_3	Ground (according to M.2 configurations for SSD-SATA definition)
2	3.3V	Supply Pin, 3.3V
3	GND	Ground
4	3.3V	Supply pin, 3.3V
5	No connect	No connect
6	Not available	No connect
7	Not available	No connect
8	Not available	Reserved for Apacer use only[1]
9	No connect	No connect
10	DAS/DSS	Device Activity Signal/Disable Staggered Spin-up
11	No connect	No connect
12	(removed for key)	Mechanical notch B
13	(removed for key)	Mechanical notch B
14	(removed for key)	Mechanical notch B
15	(removed for key)	Mechanical notch B
16	(removed for key)	Mechanical notch B
17	(removed for key)	Mechanical notch B
18	(removed for key)	Mechanical notch B
19	(removed for key)	Mechanical notch B
20	Not available	No connect
21	CONFIG_0	Ground (according to M.2 configurations for SSD-SATA definition)
22	Not available	No connect
23	Not available	No connect
24	Not available	No connect
25	Not available	No connect
26	Not available	No connect
27	GND	Ground
28	Not available	No connect

© 2022 Apacer Technology Inc.

Table 3-1 Pin Assignments

Pin	Type	Description
29	PERn1	No connect
30	Not available	No connect
31	PERp1	No connect
32	Not available	No connect
33	GND	Ground
34	Not available	No connect
35	PETn1	No connect
36	Not available	No connect
37	PETp1	No connect
38	DEVSLP	Device Sleep, input. If driven high the host is informing the SSD to enter a low power state
39	GND	Ground
40	Not available	No connect
41	SATA-Rx+	Host receiver differential signal pair
42	Not available	No connect
43	SATA-Rx-	Host receiver differential signal pair
44	Not available	No connect
45	GND	Ground
46	Not available	No connect
47	SATA-Tx-	Host transmitter differential pair
48	Not available	No connect
49	SATA-Tx+	Host transmitter differential pair
50	PERST#	No connect
51	GND	Ground
52	CLKREQ#	No connect
53	REFCLKN	No connect
54	PEWAKE#	No connect
55	REFCLKP	No connect
56	MFG1	Reserved for Apacer use only[1]
57	GND	Ground
58	MFG2	Reserved for Apacer use only[1]
59	(removed for key)	Mechanical notch M
60	(removed for key)	Mechanical notch M
61	(removed for key)	Mechanical notch M
62	(removed for key)	Mechanical notch M
63	(removed for key)	Mechanical notch M
64	(removed for key)	Mechanical notch M
65	(removed for key)	Mechanical notch M
66	(removed for key)	Mechanical notch M
67	Not available	No connect
68	SUSCLK	No connect
69	CONFIG_1	Ground
70	3.3V	Supply pin, 3.3V
71	GND	Ground
72	3.3V	Supply pin, 3.3V
73	GND	Ground
74	3.3V	Supply pin, 3.3V
75	CONFIG_2	Ground

Note:
1. Reserved by Apacer, please do not connect to a host.

© 2022 Apacer Technology Inc.

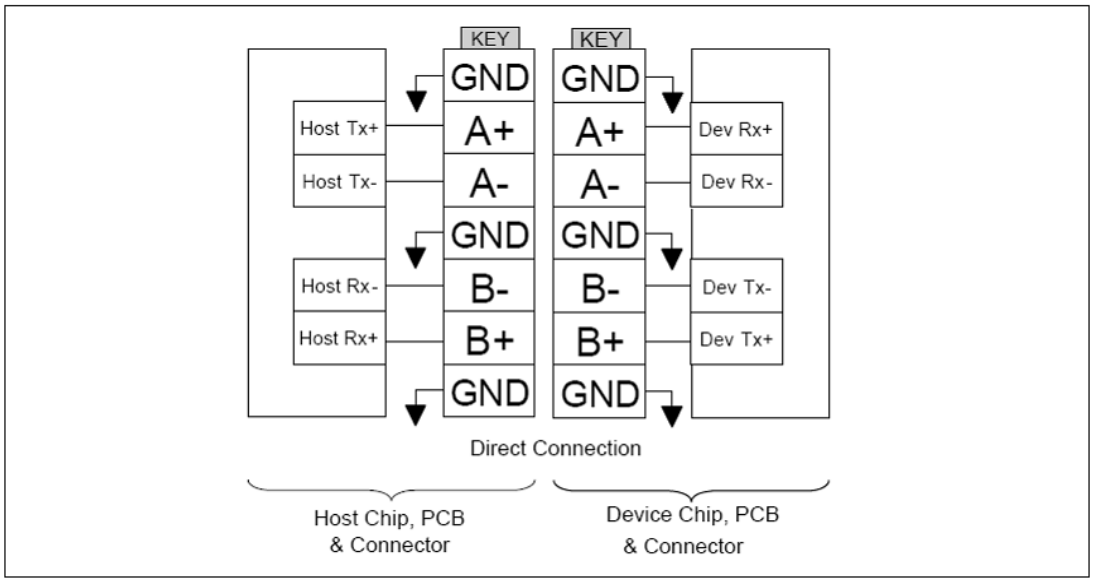

Figure 3-2 Direct Connection between the Host and Device

© 2022 Apacer Technology Inc.

4. Product Specifications

4.1 Capacity

Capacity specifications of SV240-M280 are available as shown in Table 4-1. It lists the specific capacity and the default numbers of heads, sectors and cylinders for each product line.

Table 4-1 Capacity Specifications

Capacity	Total bytes	Cylinders	Heads	Sectors	Total LBA
240 GB	240,057,409,536	16,383	16	63	468,862,128
480 GB	480,103,981,056	16,383	16	63	937,703,088
960 GB	960,197,124,096	16,383	16	63	1,875,385,008
1920 GB	1,920,383,410,176	16,383	16	63	3,750,748,848

Notes:
- Display of total bytes varies from operating systems.
- 1 GB = 1,000,000,000 bytes; 1 sector = 512 bytes.
- LBA count addressed in the table above indicates total user storage capacity and will remain the same throughout the lifespan of the device. However, the total usable capacity of the SSD is most likely to be less than the total physical capacity because a small portion of the capacity is reserved for device maintenance usages.

4.2 Performance

Performance of SV240-M280 is listed below in Table 4-2.

Table 4-2 Performance Specifications

Capacity / Performance	240 GB	480 GB	960 GB	1920 GB
Sequential Read (MB/s)	560	560	560	560
Sequential Write (MB/s)	470	485	500	490
Random Read IOPS (4K)	73,000	95,000	95,000	95,000
Random Write IOPS (4K)	83,000	84,000	84,000	84,000

Notes:
- Results may differ from various flash configurations or host system setting.
- Sequential read/write is based on CrystalDiskMark 8.0.4 with file size 1,000MB.
- Random read/write is measured using IOMeter with Queue Depth 32.

© 2022 Apacer Technology Inc.

4.3 Environmental Specifications

Environmental specifications of SV240-M280 product are shown in Table 4-3.

Table 4-3 Environmental Specifications

Environment	Specifications
Temperature	Operation: 0°C to 70°C (Standard); -40°C to 85°C (Wide) Non-operation: -55°C to 100°C
Vibration	Operation: 7.69(Grms), 20~2000(Hz)/random (compliant with MIL-STD-810G) Non-operation: 4.02(Grms), 15~2000(Hz)/random (compliant with MIL-STD-810G)
Shock	Operation: Acceleration, 50(G)/11(ms)/half sine (compliant with MIL-STD-202G) Non-operation: Acceleration,1,500(G)/0.5(ms)/half sine (compliant with MIL-STD-883K)

Note: This Environmental Specification table indicates the conditions for testing the device. Real world usages may affect the results.

4.4 Mean Time Between Failures (MTBF)

Mean Time Between Failures (MTBF) is predicted based on reliability data for the individual components in SV240-M280. The prediction result for SV240-M280 is more than 3,000,000 hours.

Note: The MTBF is predicated and calculated based on “Telcordia Technologies Special Report, SR-332, Issue 3” method.

4.5 Certification and Compliance

SV240-M280 complies with the following standards:

- CE
- FCC
- RoHS Recast
- MIL-STD-810G

4.6 Endurance

The endurance of a storage device is predicted by Drive Writes Per Day based on several factors related to usage, such as the amount of data written into the drive, block management conditions, and daily workload for the drive. Thus, key factors, such as Write Amplifications and the number of P/E cycles, can influence the lifespan of the drive.

Table 4-4 Endurance Specifications

Capacity	Drive Writes Per Day
240 GB	2.20
480 GB	2.20
960 GB	2.25
1920 GB	2.23

Notes:

- This estimation complies with JEDEC JESD-219, Enterprise endurance workload of random data with payload size distribution.
- Flash vendor guaranteed 3D NAND TLC P/E cycle: 3K
- WAF may vary from capacity, flash configurations and writing behavior on each platform.
- 1 Terabyte = 1,024GB
- DWPD (Drive Writes Per Day) is calculated based on the number of times that user overwrites the entire capacity of an SSD per day of its lifetime during the warranty period. (3D NAND TLC warranty: 3 years)

© 2022 Apacer Technology Inc.

4.7 LED Indicator Behavior

The behavior of the SV240-M280 LED indicators is described in Table 4-5.

Table 4-5 LED Behavior

Location	LED	Description
LED A	DAS	LED blinks when the drive is being accessed

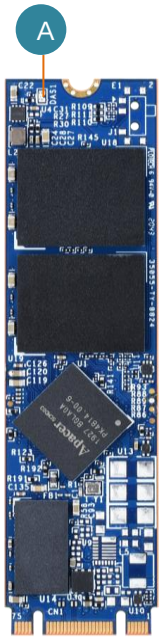

© 2022 Apacer Technology Inc.

5. Flash Management

5.1 Error Correction/Detection

SV240-M280 implements a hardware ECC scheme, based on the Low Density Parity Check (LDPC). LDPC is a class of linear block error correcting code which has apparent coding gain over BCH code because LDPC code includes both hard decoding and soft decoding algorithms. With the error rate decreasing, LDPC can extend SSD endurance and increase data reliability while reading raw data inside a flash chip.

5.2 Bad Block Management

Current production technology is unable to guarantee total reliability of NAND flash memory array. When a flash memory device leaves factory, it comes with a minimal number of initial bad blocks during production or out-of-factory as there is no currently known technology that produce flash chips free of bad blocks. In addition, bad blocks may develop during program/erase cycles. Since bad blocks are inevitable, the solution is to keep them in control. Apacer flash devices are programmed with ECC, page mapping technique and S.M.A.R.T to reduce invalidity or error. Once bad blocks are detected, data in those blocks will be transferred to free blocks and error will be corrected by designated algorithms.

5.3 Global Wear Leveling

Flash memory devices differ from Hard Disk Drives (HDDs) in terms of how blocks are utilized. For HDDs, when a change is made to stored data, like erase or update, the controller mechanism on HDDs will perform overwrites on blocks. Unlike HDDs, flash blocks cannot be overwritten and each P/E cycle wears down the lifespan of blocks gradually. Repeatedly program/erase cycles performed on the same memory cells will eventually cause some blocks to age faster than others. This would bring flash storages to their end of service term sooner. Global wear leveling is an important mechanism that levels out the wearing of all blocks so that the wearing-down of all blocks can be almost evenly distributed. This will increase the lifespan of SSDs.

5.4 Flash Translation Layer – Page Mapping

Page mapping is an advanced flash management technology whose essence lies in the ability to gather data, distribute the data into flash pages automatically, and then schedule the data to be evenly written. Page-level mapping uses one page as the unit of mapping. The most important characteristic is that each logical page can be mapped to any physical page on the flash memory device. This mapping algorithm allows different sizes of data to be written to a block as if the data is written to a data pool and it does not need to take extra operations to process a write command. Thus, page mapping is adopted to increase random access speed and improve SSD lifespan, reduce block erase frequency, and achieve optimized performance and lifespan.

5.5 ATA Secure Erase

ATA Secure Erase is an ATA disk purging command currently embedded in most of the storage drives. Defined in ATA specifications, (ATA) Secure Erase is part of Security Feature Set that allows storage drives to erase all user data areas. The erase process usually runs on the firmware level as most of the ATA-based storage media currently in the market are built-in with this command. ATA Secure Erase can securely wipe out the user data in the drive and protects it from malicious attack.

© 2022 Apacer Technology Inc.

5.6 DataDefender™

Apacer's DataDefender is an advanced technology of power failure management which combines both firmware and hardware mechanisms to ensure data integrity. When power disruption occurs, the low voltage detector will be triggered. When this happens, the SSD's protection mechanism is activated and cuts off data transmission from the host. Once the power supply is resumed, the firmware protection mechanism will ensure the integrity of the firmware as well as the data already written into the NAND flash media.

Note: The controller unit of this product model is designed with a DRAM as a write cache for improved performance and data efficiency. Though unlikely to happen in most cases, the data cached in the volatile DRAM might be potentially affected if a sudden power loss takes place before the cached data is flushed into non-volatile NAND flash memory.

5.7 TRIM

TRIM is a SATA command that helps improve the read/write performance and efficiency of solid-state drives (SSD). The command enables the host operating system to inform SSD controller which blocks contain invalid data, mostly because of the erase commands from host. The invalid will be discarded permanently and the SSD will retain more space for itself.

5.8 Device Sleep (DevSleep or DEVSLP) Mode

Device Sleep is a feature that allows SATA devices to enter a low power mode by designating a particular pin as DEVSLP signal with an aim to reducing power consumption.



Figure 5-1 Device Sleep

5.9 Hyper Cache Technology

Apacer proprietary Hyper Cache technology uses a portion of the available capacity as SLC (1bit-per-cell) NAND flash memory, called Hyper cache mode. When data is written to SSD, the firmware will direct the data to Hyper Cache mode, providing excellent performance to handle various scenarios in industrial use.

© 2022 Apacer Technology Inc.

5.10 Over-provisioning

Over-provisioning (OP) is a certain portion of the SSD capacity exclusively for increasing Garbage Collection (GC) efficiency, especially when the SSD is filled to full capacity or performs a heavy mixed-random workload. OP has the advantages of providing extended life expectancy, reliable data integrity, and high sustained write performance.

5.11 SATA Power Management

By complying with SATA 6 Gb/s specifications, the SSD supports the following SATA power saving modes:

- ACTIVE: PHY ready, full power, TX & RX operational
- PARTIAL: Reduces power, resumes in under 10 µs (microseconds)
- SLUMBER: Reduces power, resumes in under 10 ms (milliseconds)
- HIPM: Host-Initiated Power Management
- DIPM: Device-Initiated Power Management
- AUTO-SLUMBER: Automatic transition from partial to slumber.
- Device Sleep (DevSleep or DEVSLP): PHY powered down; power consumption ≦ 5 mW; host assertion time ≦ 10 ms; exit timeout from this state ≦ 20 ms (unless specified otherwise in SATA Identify Device Log).

Note: The behaviors of power management features would depend on host/device settings.

5.12 DataRAID™

Apacer's DataRAID algorithm applies an additional level of protection and error-checking. Using this algorithm, a certain amount of space is given over to aggregating and resaving the existing parity data used for error checking. So, in the event that data becomes corrupted, the parity data can be compared to the existing uncorrupted data and the content of the corrupted data can be rebuilt.

5.13 SMART Read Refresh™

Apacer's SMART Read Refresh plays a proactive role in avoiding read disturb errors from occurring to ensure health status of all blocks of NAND flash. Developed for read-intensive applications in particular, SMART Read Refresh is employed to make sure that during read operations, when the read operation threshold is reached, the data is refreshed by re-writing it to a different block for subsequent use.

© 2022 Apacer Technology Inc.

6. Security and Reliability Features

6.1 Advanced Encryption Standard

Advanced Encryption Standard (AES) is a specification for the encryption of electronic data. AES has been adopted by the U.S. government since 2001 to protect classified information and is now widely implemented in embedded computing applications. The AES algorithm used in software and hardware is symmetric so that encrypting/decrypting requires the same encryption key. Without the key, the encrypted data is inaccessible to ensure information security.

Notably in flash memory applications, AES 256-bit hardware encryption is the mainstream to protect sensitive or confidential data. The hardware encryption provides better performance, reliability, and security than software encryption. It uses a dedicated processor, which is built inside the controller, to process the encryption and decryption. This enormously shortens the processing time and makes it efficient.

6.2 TCG Opal (optional)

Developed by the Trusted Computing Group (TCG), an organization whose members work together to formulate industry standards, Opal is a set of security specifications used for applying hardware-based encryption to storage devices.

Hardware encryption has many advantages. First of all, it transfers the computational load of the encryption process to dedicated processors, reducing the stress on the host system's CPU. In addition, storage devices complying with Opal specifications are self-encryption devices. Opal specifications also feature boot authentication. When the drive is being accessed, the shadow MBR will request the drive password at boot. The drive will only unlock and decrypt if the correct password is supplied. The other feature is LBA-specific permissions. Users are assigned different permissions for LBA ranges created by the device administrator. Each LBA range is password-protected and can only be accessed by users with the correct key to perform permitted actions (read/write/erase).

6.3 End-to-End Data Protection

End-to-End Data Protection is a feature implemented in Apacer SSD products that extends error control to cover the entire path from the host computer to the drive and back, and ensure data integrity at multiple points in the path to enable reliable delivery of data transfers. Unlike ECC which does not exhibit the ability to determine the occurrence of errors throughout the process of data transmission, End-to-End Data Protection allows SSD controller to identify an error created anywhere in the path and report the error to the host computer before it is written to the drive. This error-checking and error-reporting mechanism therefore guarantees the trustworthiness and reliability of the SSD.

6.4 Thermal Sensor

Apacer Thermal Sensor is a digital temperature sensor with serial interface. By using a designated pin for transmission, storage device owners are able to read temperature data.

© 2022 Apacer Technology Inc.

7. Software Interface

7.1 Command Set

This section defines the software requirements and the format of the commands the host sends to SV240-M280. Commands are issued to SV240-M280 by loading the required registers in the command block with the supplied parameters, and then writing the command code to the Command register.

Table 7-1 Command Set

Code	Command	Code	Command
E5h	CHECK POWER MODE	F4h	SECURITY ERASE UNIT
06h	DATA SET MANAGEMENT	F5h	SECURITY FREEZE LOCK
92h	DOWNLOAD MICROCODE	F1h	SECURITY SET PASSWORD
90h	EXECUTE DEVICE DIAGNOSTIC	F2h	SECURITY UNLOCK
E7h	FLUSH CACHE	70h	SEEK
EAh	FLUSH CACHE EXT	EFh	SET FEATURES
ECh	IDENTIFY DEVICE	C6h	SET MULTIPLE MODE
E3h	IDLE	E6h	SLEEP
E1h	IDLE IMMEDIATE	B0h	SMART
91h	INITIALIZE DEVICE PARAMETERS	E2h	STANDBY
E4h	READ BUFFER	E0h	STANDBY IMMEDIATE
C8h	READ DMA	E8h	WRITE BUFFER
25h	READ DMA EXT	CAh	WRITE DMA
60h	READ FPDMA QUEUED	35h	WRITE DMA EXT
C4h	READ MULTIPLE	3Dh	WRITE DMA FUA EXT
29h	READ MULTIPLE EXT	61h	WRITE FPDMA QUEUED
2Fh	READ LOG EXT	3Fh	WRITE LOG EXT
47h	READ LOG DMA EXT	57h	WRITE LOG DMA EXT
20h	READ SECTOR	C5h	WRITE MULTIPLE
24h	READ SECTOR EXT	39h	WRITE MULTIPLE EXT
40h	READ VERIFY SECTORS	CEh	WRITE MULTIPLE FUA EXT
42h	READ VERIFY SECTORS EXT	30h	WRITE SECTOR
10h	RECALIBRATE	34h	WRITE SECTOR EXT
F6h	SECURITY DISABLE PASSWORD	45h	WRITE UNCORRECTABLE EXT
F3h	SECURITY ERASE PREPARE		

Table 7-2 Trusted Computing Feature Set

Code	Command	Code	Command
5Ch	TRUSTED RECEIVE	5Eh	TRUSTED SEND
5Dh	TRUSTED RECEIVE DMA	5Fh	TRUSTED SEND DMA

Note: This feature set is only applicable to products implemented with AES and Opal functions.

© 2022 Apacer Technology Inc.

7.2 S.M.A.R.T.

S.M.A.R.T. is an abbreviation for Self-Monitoring, Analysis and Reporting Technology, a self-monitoring system that provides indicators of drive health as well as potential disk problems. It serves as a warning for users from unscheduled downtime by monitoring and displaying critical drive information. Ideally, this should allow taking proactive actions to prevent drive failure and make use of S.M.A.R.T. information for future product development reference.

Apacer devices use the standard SMART command B0h to read data out from the drive to activate our S.M.A.R.T. feature that complies with the ATA/ATAPI specifications. S.M.A.R.T. Attribute IDs shall include initial bad block count, total later bad block count, maximum erase count, average erase count, power on hours and power cycle. When the S.M.A.R.T. Utility running on the host, it analyzes and reports the disk status to the host before the device reaches in critical condition.

Note: Attribute IDs may vary from product models due to various solution design and supporting capabilities.

Apacer memory products come with S.M.A.R.T. commands and subcommands for users to obtain information of drive status and to predict potential drive failures. Users can take advantage of the following commands/subcommands to monitor the health of the drive.

Table 7-3 SMART Subcommand Set

Code	SMART Subcommand
D0h	READ DATA
D1h	READ ATTRIBUTE THRESHOLDS
D2h	ENABLE/DISABLE ATTRIBUTE AUTOSAVE
D4h	EXECUTE OFF-LINE IMMEDIATE
D5h	SMART READ LOG
D6h	SMART WRITE LOG
D8h	ENABLE OPERATIONS
D9h	DISABLE OPERATIONS
DAh	RETURN STATUS

Table 7-4 General SMART Attribute Structure

Byte	Description
0	ID (Hex)
1 – 2	Status Flag
3	Value
4	Worst
5*-11	Raw Data

*Byte 5: LSB

© 2022 Apacer Technology Inc.

Table 7-5 SMART Attribute ID List

ID (Hex)	Attribute Name
9 (0x09)	Power-on Hours
12 (0x0C)	Power Cycle Count
163 (0xA3)	Maximum Erase Count
164 (0xA4)	Average Erase Count
166 (0xA6)	Total Later Bad Block Count
167 (0xA7)	SSD Protect Mode (Vendor Specific)
168 (0xA8)	SATA PHY Error Count
171 (0xAB)	Program Fail Count
172 (0xAC)	Erase Fail Count
175 (0xAF)	Bad Cluster Table Count
192 (0xC0)	Unexpected Power Loss Count
194 (0xC2)	Temperature
231 (0xE7)	Lifetime Left
241 (0xF1)	Total Sectors of Write

© 2022 Apacer Technology Inc.

8. Electrical Specifications

8.1 Operating Voltage

Table 8-1 lists the supply voltage for SV240-M280.

Table 8-1 Operating Range

Item	Range
Supply Voltage	3.3V ± 5% (3.135-3.465V)

8.2 Power Consumption

Table 8-2 lists the power consumption for SV240-M280.

Table 8-2 Power Consumption

Mode \ Capacity	240 GB	480 GB	960 GB	1920 GB
Active (mA)	560	585	625	625
Idle (mA)	85	85	90	95

Notes:

- All values are typical and may vary depending on flash configurations or host system settings.
- Active power is an average power measurement performed using CrystalDiskMark with 128KB sequential read/write transfers.

© 2022 Apacer Technology Inc.

9. Mechanical Specifications

9.1 Dimensions

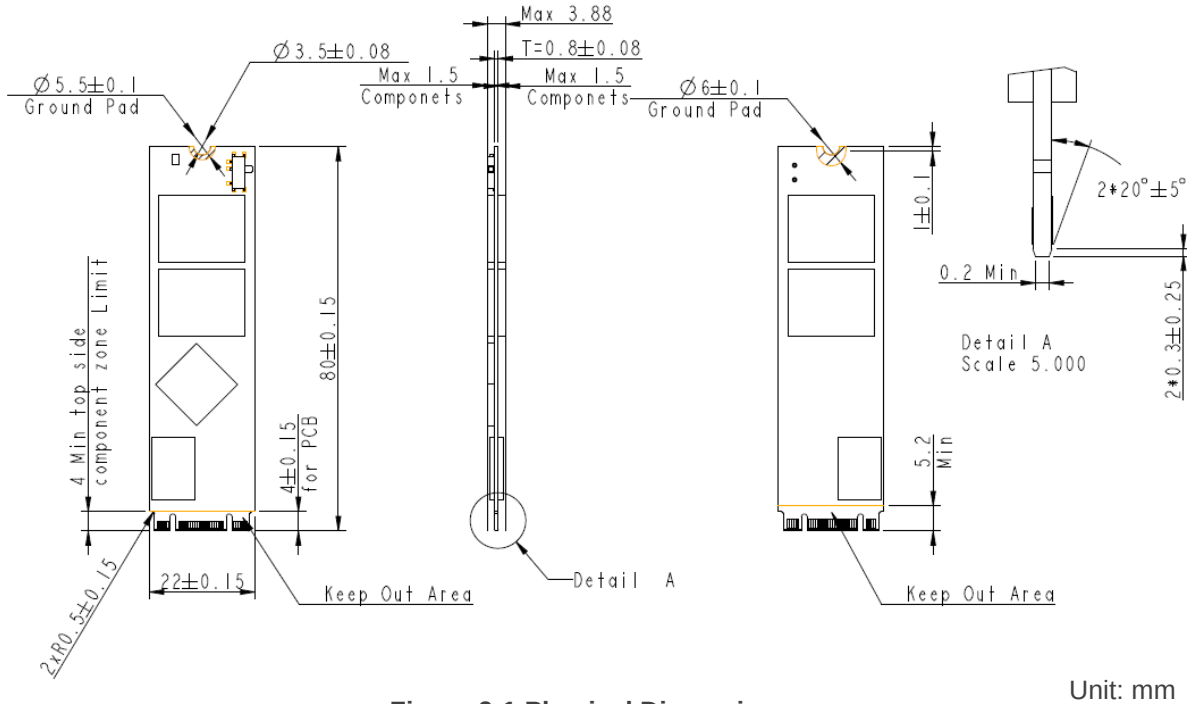

Unit: mm

Figure 9-1 Physical Dimensions

9.2 Net Weight

Table 9-1 Net Weight

Capacity	Net Weight (g ± 5%)
240GB	6.62
480GB	6.61
960GB	7.10
1920GB	7.61

© 2022 Apacer Technology Inc.

10. Product Ordering Information

10.1 Product Code Designations

Apacer's SV240-M280 SSD is available in different configurations and densities. See the chart below for a comprehensive list of options for the SV240-M280 series devices.

Code	1	2	3	4	5	6	7	8	9	10	11	12	13	14	15	16
	A	5	2	.	X	X	5	X	X	B	.	X	X	X	X	X

Code 1-3 (Product Line & Form Factor)	SATA M.2 2280
Code 5-6 (Model/Solution)	24: SV240 A2: SV240 with TCG Opal
Code 7-8 (Product Capacity)	5J: 240GB 5K: 480GB 5L: 960GB 5M: 1920GB
Code 9 (Flash Type & Product Temp)	G: 3D TLC Standard temperature H: 3D TLC Wide temperature
Code 10 (Product Spec)	Double side B+M key
Code 12-14 (Version Number)	Random numbers generated by system
Code 15-16 (Firmware Version)	41: Thermal Sensor DEVSLP OP 44: Thermal Sensor with DEVSLP + TCG Opal OP

© 2022 Apacer Technology Inc.

10.2 Valid Combinations

The following tables list the available models of the SV240-M280 series which are in mass production or will be in mass production. Consult your Apacer sales representative to confirm availability of valid combinations and to determine availability of new combinations.

10.2.1 Without TCG Opal

Capacity	Standard Temperature	Wide Temperature
240GB	A52.245JGB.00441	A52.245JHB.00641
480GB	A52.245KGB.00341	A52.245KHB.00641
960GB	A52.245LGB.00341	A52.245LHB.00741
1920GB	A52.245MGB.00241	A52.245MHB.00541

10.2.2 With TCG Opal

Capacity	Standard Temperature	Wide Temperature
240GB	A52.A25JGB.00344	A52.A25JHB.00344
480GB	A52.A25KGB.00344	A52.A25KHB.00344
960GB	A52.A25LGB.00344	A52.A25LHB.00344
1920GB	A52.A25MGB.00244	A52.A25MHB.00244

© 2022 Apacer Technology Inc.

Revision History

Revision	Description	Date
0.1	Preliminary release	8/4/2022
1.0	Official release	8/9/2022
1.1	Added 1920GB support	8/24/2022

© 2022 Apacer Technology Inc.

Global Presence

Taiwan (Headquarters)
Apacer Technology Inc.
1F., No.32, Zhongcheng Rd., Tucheng Dist.,
New Taipei City 236, Taiwan R.O.C.
Tel: 886-2-2267-8000
Fax: 886-2-2267-2261
amtsales@apacer.com

U.S.A.
Apacer Memory America, Inc.
46732 Lakeview Blvd., Fremont, CA 94538
Tel: 1-408-518-8699
Fax: 1-510-249-9551
sa@apacerus.com

Japan
Apacer Technology Corp.
6F, Daiyontamachi Bldg., 2-17-12, Shibaura, Minato-Ku,
Tokyo, 108-0023, Japan
Tel: 81-3-5419-2668
Fax: 81-3-5419-0018
jpservices@apacer.com

Europe
Apacer Technology B.V.
Science Park Eindhoven 5051 5692 EB Son,
The Netherlands
Tel: 31-40-267-0000
Fax: 31-40-290-0686
sales@apacer.nl

China
Apacer Electronic (Shanghai) Co., Ltd
Room D, 22/FL, No.2, Lane 600, JieyunPlaza,
Tianshan RD, Shanghai, 200051, China
Tel: 86-21-6228-9939
Fax: 86-21-6228-9936
sales@apacer.com.cn

India
Apacer Technologies Pvt Ltd,
1874, South End C Cross, 9th Block Jayanagar,
Bangalore-560069, India
Tel: 91-80-4152-9061/62
Fax: 91-80-4170-0215
sales_india@apacer.com

© 2022 Apacer Technology Inc.