Apacer

RoHS Recast Compliant

# M.2 2280 Flash Drive

## ST250-M280 BiCS5 Product Specifications



**October 20, 2022**

**Version 1.8**


**Apacer Technology Inc.**

1F, No.32, Zhongcheng Rd., Tucheng Dist., New Taipei City, Taiwan, R.O.C

Tel: +886-2-2267-8000 Fax: +886-2-2267-2261

www.apacer.com

Apacer

# Specifications Overview:

- **Compliance with SATA Revision 3.2**
  - SATA 6 Gb/s interface
  - ATA-8 command set
  - Backward compatible with SATA 1.5/3 Gb/s
- **Capacity**
  - Single side: 128, 256, 512 GB
  - Double side: 1, 2 TB
- **Performance**[1]
  - Burst read/write: 600 MB/sec
  - Sequential read: Up to 560 MB/sec
  - Sequential write: Up to 510 MB/sec
  - Random read (4K): Up to 48,000 IOPS
  - Random write (4K): Up to 70,000 IOPS
- **Flash Management**
  - Low-Density Parity-Check (LDPC) Code
  - Global Wear Leveling
  - Flash bad-block management
  - Flash Translation Layer: Page Mapping
  - S.M.A.R.T.
  - DataDefender™
  - ATA Secure Erase
  - TRIM
  - Device Sleep
  - Hyper Cache Technology
  - SMART Read Refresh™
- **NAND Flash Type:** 3D TLC (BiCS5)
- **MTBF:** >3,000,000 hours
- **Endurance (in drive writes per day: DWPD)**
  - 128 GB: 2.03 DWPD
  - 256 GB: 2.28 DWPD
  - 512 GB: 2.21 DWPD
  - 1 TB: 2.46 DWPD
  - 2 TB: 2.02 DWPD
- **Temperature Range**
  - Operating: 0°C to 70°C
  - Storage: -55°C to 100°C
- **Supply Voltage**
  - 3.3 V ± 5%
- **Power Consumption**[1]
  - Active mode: 380 mA
  - Idle mode: 65 mA
- **SATA Power Management Modes**
- **Connector Type**
  - 75-pin SATA-based M.2 module pinout
- **Form Factor**
  - M.2 2280-D5-B-M
  - Dimensions (unit: mm):
    Single side: 22.00 x 80.00 x 2.38(max.)
    Double side: 22.00 x 80.00 x 3.88(max.)
  - Net weight: 6.54g ± 5%
- **Security**
  - AES 256-bit hardware encryption
- **Reliability**
  - Thermal Sensor
  - End-to-End Data Protection
- **LED Indicators for Drive Behavior**
- **RoHS Recast Compliant (Complies with 2011/65/EU Standard)**

Note:
1. Varies from capacities. The values for performances and power consumptions presented are typical and may vary depending on flash configurations or platform settings. The term idle refers to the standby state of the device


© 2022 Apacer Technology Inc.

# Table of Contents

**1. General Description ..... 4**

**2. Functional Block ..... 4**

**3. Pin Assignments ..... 5**

**4. Product Specifications ..... 8**

4.1 Capacity ..... 8
4.2 Performance ..... 8
4.3 Environmental Specifications ..... 9
4.4 Mean Time Between Failures (MTBF) ..... 9
4.5 Certification and Compliance ..... 9
4.6 Endurance ..... 10
4.7 LED Indicator Behavior ..... 10

**5. Flash Management ..... 11**

5.1 Error Correction/Detection ..... 11
5.2 Bad Block Management ..... 11
5.3 Global Wear Leveling ..... 11
5.4 DataDefender™ ..... 11
5.5 ATA Secure Erase ..... 11
5.6 TRIM ..... 12
5.7 Flash Translation Layer – Page Mapping ..... 12
5.8 Device Sleep (DevSleep or DEVSLP) Mode ..... 12
5.9 Hyper Cache Technology ..... 12
5.10 SATA Power Management ..... 13
5.11 SMART Read Refresh™ ..... 13

**6. Security and Reliability Features ..... 14**

6.1 Advanced Encryption Standard ..... 14
6.2 Thermal Sensor ..... 14
6.3 End-to-End Data Protection ..... 14

**7. Software Interface ..... 15**

7.1 Command Set ..... 15
7.2 S.M.A.R.T. ..... 16

**8. Electrical Specifications ..... 18**



© 2022 Apacer Technology Inc.

8.1 Operating Voltage ..... 18
8.2 Power Consumption ..... 18

**9. Mechanical Specifications ..... 19**

9.1 Single Side (256-512GB) ..... 19
9.2 Double Side (1-2TB) ..... 19
9.3 Net Weight ..... 20

**10. Product Ordering Information ..... 21**

10.1 Product Code Designations ..... 21
10.2 Valid Combinations ..... 22



© 2022 Apacer Technology Inc.

# 1. General Description

Apacer's ST250-M280 is the next generation Solid State Drive (SSD) with compact and removable storage to support larger, faster hosts deployed in a wide range of applications that require outstanding performance. Designed with SATA-based connector pinouts and in SATA 6 Gb/s interface, ST250-M280 provides full compliance with the latest SATA Revision 3.2 interface specifications and delivers exceptional read/write speed, making it the leading add-in storage solution for future host computing systems.

ST250-M280 utilizes 3D NAND for higher capacity up to 2TB and provides more power efficiency than 2D NAND. Regarding reliability, ST250-M280 is built with a powerful SATA controller that supports on-the-module ECC as well as efficient wear leveling scheme and implemented with LDPC (Low Density Parity Check) ECC engine to extend SSD endurance and increase data reliability. Furthermore, ST250-M280 is equipped with a built-in thermal sensor to monitor the temperature of the SSD via S.M.A.R.T commands to prevent overheating. Operating under 6 Gb/s interface, ST250-M280 is provided with Apacer latest S.M.A.R.T. that is primarily oriented for the latest SATA interface SSD, for drive lifetime monitoring and analysis. For highly-intensive applications, End-to-End Data Protection ensures that data integrity can be assured at multiple points in the path to enable reliable delivery of data transfers.

Security-wise, Advanced Encryption Standard (AES) ensures data security and provides users with peace of mind knowing their data is safeguarded at all times. ST250-M280 also adopts the latest page mapping file translation layer and comes with various implementations including power saving modes, wear leveling, flash block management, S.M.A.R.T., TRIM, Hyper Cache technology, DataDefender™ and SMART Read Refresh™.

# 2. Functional Block

Apacer ST250-M280 includes a single-chip controller and flash media. The controller integrates the flash management unit to support multi-channel, multi-bank flash arrays. Figure 2-1 shows the functional block diagram.

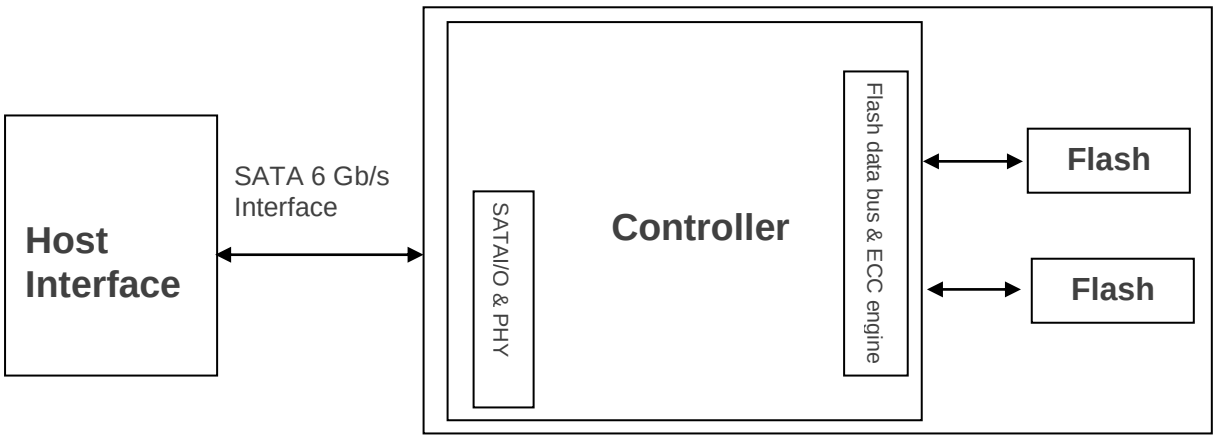


**Figure 2-1 Functional Block Diagram**


© 2022 Apacer Technology Inc.

# 3. Pin Assignments

This connector does not support hot plug capability. There are a total of 75 pins. 12 pin locations are used for mechanical key locations; this allows such a module to plug into both Key B and Key M connectors.

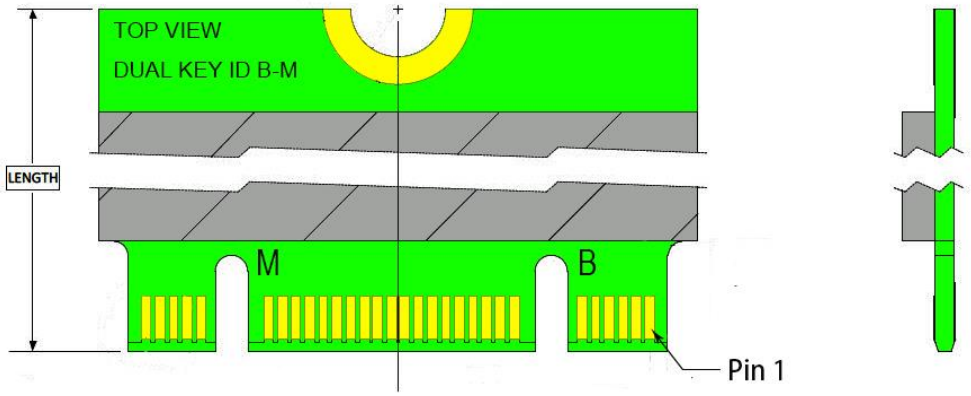


**Figure 3-1 SATA Connectors**

**Table 3-1 Pin Assignments**

| Pin | Type | Description |
|---|---|---|
| 1 | CONFIG_3 | Ground (according to M.2 configurations for SSD-SATA definition) |
| 2 | 3.3V | Supply Pin, 3.3V |
| 3 | GND | Ground |
| 4 | 3.3V | Supply pin, 3.3V |
| 5 | No connect | No connect |
| 6 | Not available | No connect |
| 7 | Not available | No connect |
| 8 | Not available | Reserved for Apacer use only[1] |
| 9 | No connect | No connect |
| 10 | DAS/DSS | Device Activity Signal/Disable Staggered Spin-up |
| 11 | No connect | No connect |
| 12 | (removed for key) | Mechanical notch B |
| 13 | (removed for key) | Mechanical notch B |
| 14 | (removed for key) | Mechanical notch B |
| 15 | (removed for key) | Mechanical notch B |
| 16 | (removed for key) | Mechanical notch B |
| 17 | (removed for key) | Mechanical notch B |
| 18 | (removed for key) | Mechanical notch B |
| 19 | (removed for key) | Mechanical notch B |
| 20 | Not available | No connect |
| 21 | CONFIG_0 | Ground (according to M.2 configurations for SSD-SATA definition) |
| 22 | Not available | No connect |


© 2022 Apacer Technology Inc.

**Table 3-1 Pin Assignments**

| Pin | Type | Description |
|---|---|---|
| 23 | Not available | No connect |
| 24 | Not available | No connect |
| 25 | Not available | No connect |
| 26 | Not available | No connect |
| 27 | GND | Ground |
| 28 | Not available | No connect |
| 29 | PERn1 | No connect |
| 30 | Not available | No connect |
| 31 | PERp1 | No connect |
| 32 | Not available | No connect |
| 33 | GND | Ground |
| 34 | Not available | No connect |
| 35 | PETn1 | No connect |
| 36 | Not available | No connect |
| 37 | PETp1 | No connect |
| 38 | DEVSLP | Device Sleep, input. If driven high the host is informing the SSD to enter a low power state |
| 39 | GND | Ground |
| 40 | Not available | No connect |
| 41 | SATA-Rx+ | Host receiver differential signal pair |
| 42 | Not available | No connect |
| 43 | SATA-Rx- | Host receiver differential signal pair |
| 44 | Not available | No connect |
| 45 | GND | Ground |
| 46 | Not available | No connect |
| 47 | SATA-Tx- | Host transmitter differential pair |
| 48 | Not available | No connect |
| 49 | SATA-Tx+ | Host transmitter differential pair |
| 50 | PERST# | No connect |
| 51 | GND | Ground |
| 52 | CLKREQ# | No connect |
| 53 | REFCLKN | No connect |
| 54 | PEWAKE# | No connect |
| 55 | REFCLKP | No connect |
| 56 | MFG1 | Reserved for Apacer use only[1] |
| 57 | GND | Ground |
| 58 | MFG2 | Reserved for Apacer use only[1] |
| 59 | (removed for key) | Mechanical notch M |
| 60 | (removed for key) | Mechanical notch M |
| 61 | (removed for key) | Mechanical notch M |
| 62 | (removed for key) | Mechanical notch M |


© 2022 Apacer Technology Inc.

**Table 3-1 Pin Assignments**

| Pin | Type | Description |
|---|---|---|
| 63 | (removed for key) | Mechanical notch M |
| 64 | (removed for key) | Mechanical notch M |
| 65 | (removed for key) | Mechanical notch M |
| 66 | (removed for key) | Mechanical notch M |
| 67 | Not available | No connect |
| 68 | SUSCLK | No connect |
| 69 | CONFIG_1 | Ground |
| 70 | 3.3V | Supply pin, 3.3V |
| 71 | GND | Ground |
| 72 | 3.3V | Supply pin, 3.3V |
| 73 | GND | Ground |
| 74 | 3.3V | Supply pin, 3.3V |
| 75 | CONFIG_2 | Ground |

Note:
1. Reserved by Apacer, please do not connect to a host.

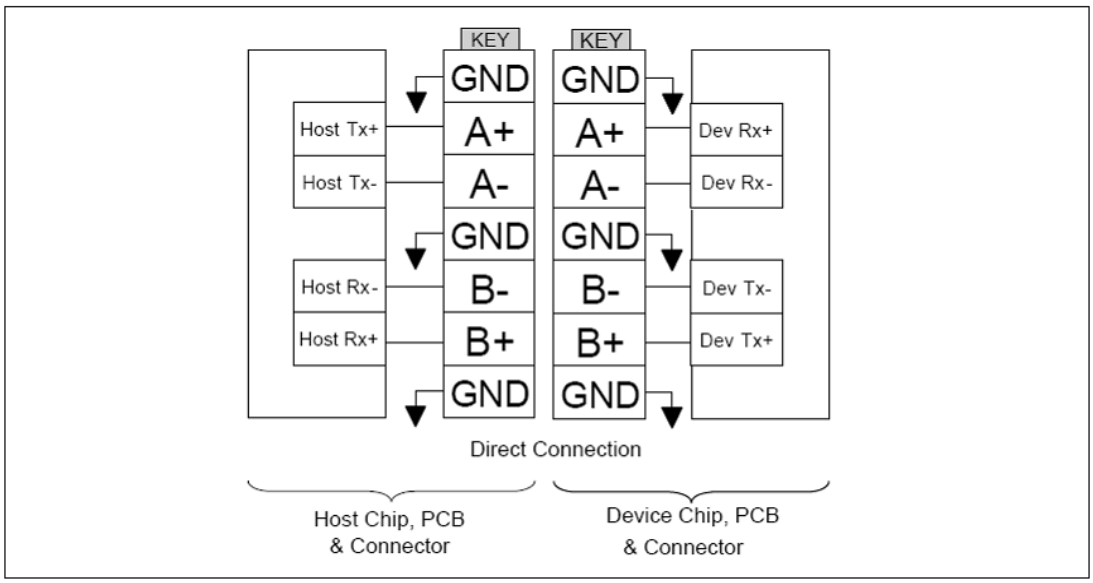


**Figure 3-2 Direct Connection between the Host and Device**


© 2022 Apacer Technology Inc.

# 4. Product Specifications

## 4.1 Capacity

Capacity specifications of ST250-M280 are available as shown in Table 4-1. It lists the specific capacity and the default numbers of heads, sectors and cylinders for each product line.

**Table 4-1 Capacity Specifications**

| Capacity | Total bytes | Cylinders | Heads | Sectors | Total LBA |
|---|---|---|---|---|---|
| 128 GB | 120,034,123,776 | 16,383 | 16 | 63 | 234,441,648 |
| 256 GB | 240,057,409,536 | 16383 | 16 | 63 | 468,862,128 |
| 512 GB | 480,103,981,056 | 16383 | 16 | 63 | 937,703,088 |
| 1 TB | 960,197,124,096 | 16383 | 16 | 63 | 1,875,385,008 |
| 2 TB | 1,920,383,410,176 | 16,383 | 16 | 63 | 3,750,748,848 |

Notes:
- Display of total bytes varies from operating systems.
- 1 GB = 1,000,000,000 bytes; 1 sector = 512 bytes.
- LBA count addressed in the table above indicates total user storage capacity and will remain the same throughout the lifespan of the device. However, the total usable capacity of the SSD is most likely to be less than the total physical capacity because a small portion of the capacity is reserved for device maintenance usages.

## 4.2 Performance

Performance of ST250-M280 is listed below in Table 4-2.

**Table 4-2 Performance Specifications**

| Capacity / Performance | 128 GB | 256 GB | 512 GB | 1 TB | 2 TB |
|---|---|---|---|---|---|
| **Sequential Read (MB/s)** | 540 | 560 | 560 | 560 | 560 |
| **Sequential Write (MB/s)** | 480 | 510 | 510 | 510 | 510 |
| **Random Read IOPS (4K)** | 14,000 | 32,000 | 48,000 | 48,000 | 48,000 |
| **Random Write IOPS (4K)** | 65,000 | 70,000 | 66,000 | 66,000 | 66,000 |

Notes:
- Results may differ from various flash configurations or host system setting.
- Sequential performance is based on CrystalDiskMark 5.2.1 with file size 1,000MB.
- Random performance measured using IOMeter with Queue Depth 32.


© 2022 Apacer Technology Inc.

## 4.3 Environmental Specifications

Environmental specifications of ST250-M280 product are shown in Table 4-3.

**Table 4-3 Environmental Specifications**

| Item | Specifications |
|---|---|
| Operating temp. | 0°C to 70°C |
| Non-operating temp. | -55°C to 100°C |
| Operating vibration | 7.69 GRMS, 20~2000 Hz/random (compliant with MIL-STD-810G) |
| Non-operating vibration | 4.02 GRMS, 15~2000 Hz/random (compliant with MIL-STD-810G) |
| Operating shock | 50G, 11ms |
| Non-operating shock | 1500G, 0.5ms (compliant with MIL-STD-883K) |

Note: This Environmental Specification table indicates the conditions for testing the device. Real world usages may affect the results.

## 4.4 Mean Time Between Failures (MTBF)

Mean Time Between Failures (MTBF) is predicted based on reliability data for the individual components in ST250-M280. The prediction result for ST250-M280 is more than 3,000,000 hours.

Note: The MTBF is predicated and calculated based on “Telcordia Technologies Special Report, SR-332, Issue 3” method.

## 4.5 Certification and Compliance

ST250-M280 complies with the following standards:

- CE
- FCC
- RoHS Recast
- MIL-STD-810G


© 2022 Apacer Technology Inc.

## 4.6 Endurance

The endurance of a storage device is predicted by Drive Writes Per Day based on several factors related to usage, such as the amount of data written into the drive, block management conditions, and daily workload for the drive. Thus, key factors, such as Write Amplifications and the number of P/E cycles, can influence the lifespan of the drive.

**Table 4-4 Endurance Specifications**

| Capacity | Drive Writes Per Day |
|---|---|
| 128 GB | 2.03 |
| 256 GB | 2.28 |
| 512 GB | 2.21 |
| 1 TB | 2.46 |
| 2 TB | 2.02 |

Notes:

- This estimation complies with JEDEC JESD-219, Enterprise endurance workload of random data with payload size distribution.
- Flash vendor guaranteed 3D NAND TLC P/E cycle: 3K
- WAF may vary from capacity, flash configurations and writing behavior on each platform.
- 1 Terabyte = 1,024 GB
- DWPD (Drive Write Per Day) is calculated based on the number of times that user overwrites the entire capacity of an SSD per day of its lifetime during the warranty period. (3D NAND TLC warranty: 3 years)

## 4.7 LED Indicator Behavior

The behavior of the ST250-M280 LED indicators is described in Table 4-5.

**Table 4-5 LED Behavior**

| Location | LED | Description |
|---|---|---|
| LED A | HDDA1 | LED blinks when the drive is being accessed |

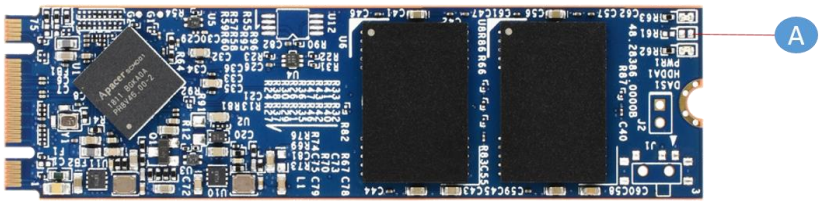




© 2022 Apacer Technology Inc.

# 5. Flash Management

## 5.1 Error Correction/Detection

ST250-M280 implements a hardware ECC scheme, based on the Low Density Parity Check (LDPC). LDPC is a class of linear block error correcting code which has apparent coding gain over BCH code because LDPC code includes both hard decoding and soft decoding algorithms. With the error rate decreasing, LDPC can extend SSD endurance and increase data reliability while reading raw data inside a flash chip.

## 5.2 Bad Block Management

Current production technology is unable to guarantee total reliability of NAND flash memory array. When a flash memory device leaves factory, it comes with a minimal number of initial bad blocks during production or out-of-factory as there is no currently known technology that produce flash chips free of bad blocks. In addition, bad blocks may develop during program/erase cycles. Since bad blocks are inevitable, the solution is to keep them in control. Apacer flash devices are programmed with ECC, page mapping technique and S.M.A.R.T to reduce invalidity or error. Once bad blocks are detected, data in those blocks will be transferred to free blocks and error will be corrected by designated algorithms.

## 5.3 Global Wear Leveling

Flash memory devices differ from Hard Disk Drives (HDDs) in terms of how blocks are utilized. For HDDs, when a change is made to stored data, like erase or update, the controller mechanism on HDDs will perform overwrites on blocks. Unlike HDDs, flash blocks cannot be overwritten and each P/E cycle wears down the lifespan of blocks gradually. Repeatedly program/erase cycles performed on the same memory cells will eventually cause some blocks to age faster than others. This would bring flash storages to their end of service term sooner. Global wear leveling is an important mechanism that levels out the wearing of all blocks so that the wearing-down of all blocks can be almost evenly distributed. This will increase the lifespan of SSDs.

## 5.4 DataDefender™

Apacer's DataDefender is an advanced technology of power failure management which combines both firmware and hardware mechanisms to ensure data integrity. When power disruption occurs, the low voltage detector will be triggered. When this happens, the SSD's protection mechanism is activated and cuts off data transmission from the host. Once the power supply is resumed, the firmware protection mechanism will ensure the integrity of the firmware as well as the data already written into the NAND flash media.

## 5.5 ATA Secure Erase

ATA Secure Erase is an ATA disk purging command currently embedded in most of the storage drives. Defined in ATA specifications, (ATA) Secure Erase is part of Security Feature Set that allows storage drives to erase all user data areas. The erase process usually runs on the firmware level as most of the ATA-based storage media currently in the market are built-in with this command. ATA Secure Erase can securely wipe out the user data in the drive and protects it from malicious attack.


© 2022 Apacer Technology Inc.

## 5.6 TRIM

TRIM is a SATA command that helps improve the read/write performance and efficiency of solid-state drives (SSD). The command enables the host operating system to inform SSD controller which blocks contain invalid data, mostly because of the erase commands from host. The invalid will be discarded permanently and the SSD will retain more space for itself.

## 5.7 Flash Translation Layer – Page Mapping

Page mapping is an advanced flash management technology whose essence lies in the ability to gather data, distribute the data into flash pages automatically, and then schedule the data to be evenly written. Page-level mapping uses one page as the unit of mapping. The most important characteristic is that each logical page can be mapped to any physical page on the flash memory device. This mapping algorithm allows different sizes of data to be written to a block as if the data is written to a data pool and it does not need to take extra operations to process a write command. Thus, page mapping is adopted to increase random access speed and improve SSD lifespan, reduce block erase frequency, and achieve optimized performance and lifespan.

## 5.8 Device Sleep (DevSleep or DEVSLP) Mode

Device Sleep is a feature that allows SATA devices to enter a low power mode by designating a particular pin as DEVSLP signal with an aim to reducing power consumption.




**Figure 5-1 Device Sleep**

## 5.9 Hyper Cache Technology

Apacer proprietary Hyper Cache technology uses a portion of the available capacity as SLC (1bit-per-cell) NAND flash memory, called Hyper cache mode. When data is written to SSD, the firmware will direct the data to Hyper Cache mode, providing excellent performance to handle various scenarios in industrial use.


© 2022 Apacer Technology Inc.

## 5.10 SATA Power Management

By complying with SATA 6 Gb/s specifications, the SSD supports the following SATA power saving modes:

- ACTIVE: PHY ready, full power, TX & RX operational
- PARTIAL: Reduces power, resumes in under 10 µs (microseconds)
- SLUMBER: Reduces power, resumes in under 10 ms (milliseconds)
- HIPM: Host-Initiated Power Management
- DIPM: Device-Initiated Power Management
- AUTO-SLUMBER: Automatic transition from partial to slumber.
- Device Sleep (DevSleep or DEVSLP): PHY powered down; power consumption ≦ 5 mW; host assertion time ≦ 10 ms; exit timeout from this state ≦ 20 ms (unless specified otherwise in SATA Identify Device Log).

Note: The behaviors of power management features would depend on host/device settings.

## 5.11 SMART Read Refresh™

Apacer's SMART Read Refresh plays a proactive role in avoiding read disturb errors from occurring to ensure health status of all blocks of NAND flash. Developed for read-intensive applications in particular, SMART Read Refresh is employed to make sure that during read operations, when the read operation threshold is reached, the data is refreshed by re-writing it to a different block for subsequent use.


© 2022 Apacer Technology Inc.

# 6. Security and Reliability Features

## 6.1 Advanced Encryption Standard

Advanced Encryption Standard (AES) is a specification for the encryption of electronic data. AES has been adopted by the U.S. government since 2001 to protect classified information and is now widely implemented in embedded computing applications. The AES algorithm used in software and hardware is symmetric so that encrypting/decrypting requires the same encryption key. Without the key, the encrypted data is inaccessible to ensure information security.

Notably in flash memory applications, AES 256-bit hardware encryption is the mainstream to protect sensitive or confidential data. The hardware encryption provides better performance, reliability, and security than software encryption. It uses a dedicated processor, which is built inside the controller, to process the encryption and decryption. This enormously shortens the processing time and makes it efficient.

## 6.2 Thermal Sensor

Apacer Thermal Sensor is a digital temperature sensor with serial interface. By using a designated pin for transmission, storage device owners are able to read temperature data.

## 6.3 End-to-End Data Protection

End-to-End Data Protection is a feature implemented in Apacer SSD products that extends error control to cover the entire path from the host computer to the drive and back, and ensure data integrity at multiple points in the path to enable reliable delivery of data transfers. Unlike ECC which does not exhibit the ability to determine the occurrence of errors throughout the process of data transmission, End-to-End Data Protection allows SSD controller to identify an error created anywhere in the path and report the error to the host computer before it is written to the drive. This error-checking and error-reporting mechanism therefore guarantees the trustworthiness and reliability of the SSD.


© 2022 Apacer Technology Inc.

# 7. Software Interface

## 7.1 Command Set

Table 7-1 summarizes the ATA commands supported by ST250-M280.

**Table 7-1 Command Set**

| Code | Command | Code | Command |
|---|---|---|---|
| E5h | CHECK POWER MODE | F4h | SECURITY ERASE UNIT |
| 06h | DATA SET MANAGEMENT | F5h | SECURITY FREEZE LOCK |
| 92h | DOWNLOAD MICROCODE | F1h | SECURITY SET PASSWORD |
| 90h | EXECUTE DEVICE DIAGNOSTIC | F2h | SECURITY UNLOCK |
| E7h | FLUSH CACHE | 70h | SEEK |
| EAh | FLUSH CACHE EXT | EFh | SET FEATURES |
| ECh | IDENTIFY DEVICE | C6h | SET MULTIPLE MODE |
| E3h | IDLE | E6h | SLEEP |
| E1h | IDLE IMMEDIATE | B0h | SMART |
| 91h | INITIALIZE DEVICE PARAMETERS | E2h | STANDBY |
| E4h | READ BUFFER | E0h | STANDBY IMMEDIATE |
| C8h | READ DMA | E8h | WRITE BUFFER |
| 25h | READ DMA EXT | CAh | WRITE DMA |
| 60h | READ FPDMA QUEUED | 35h | WRITE DMA EXT |
| C4h | READ MULTIPLE | 3Dh | WRITE DMA FUA EXT |
| 29h | READ MULTIPLE EXT | 61h | WRITE FPDMA QUEUED |
| 2Fh | READ LOG EXT | 3Fh | WRITE LOG EXT |
| 47h | READ LOG DMA EXT | 57h | WRITE LOG DMA EXT |
| 20h | READ SECTOR | C5h | WRITE MULTIPLE |
| 24h | READ SECTOR EXT | 39h | WRITE MULTIPLE EXT |
| 40h | READ VERIFY SECTORS | CEh | WRITE MULTIPLE FUA EXT |
| 42h | READ VERIFY SECTORS EXT | 30h | WRITE SECTOR |
| 10h | RECALIBRATE | 34h | WRITE SECTOR EXT |
| F6h | SECURITY DISABLE PASSWORD | 45h | WRITE UNCORRECTABLE EXT |
| F3h | SECURITY ERASE PREPARE | | |


© 2022 Apacer Technology Inc.

## 7.2 S.M.A.R.T.

S.M.A.R.T. is an abbreviation for Self-Monitoring, Analysis and Reporting Technology, a self-monitoring system that provides indicators of drive health as well as potential disk problems. It serves as a warning for users from unscheduled downtime by monitoring and displaying critical drive information. Ideally, this should allow taking proactive actions to prevent drive failure and make use of S.M.A.R.T. information for future product development reference.

Apacer devices use the standard SMART command B0h to read data out from the drive to activate our S.M.A.R.T. feature that complies with the ATA/ATAPI specifications. S.M.A.R.T. Attribute IDs shall include initial bad block count, total later bad block count, maximum erase count, average erase count, power on hours and power cycle. When the S.M.A.R.T. Utility running on the host, it analyzes and reports the disk status to the host before the device reaches in critical condition.

Note: Attribute IDs may vary from product models due to various solution design and supporting capabilities.

Apacer memory products come with S.M.A.R.T. commands and subcommands for users to obtain information of drive status and to predict potential drive failures. Users can take advantage of the following commands/subcommands to monitor the health of the drive.

**Table 7-2 SMART Subcommand Set**

| Code | SMART Subcommand |
|---|---|
| D0h | READ DATA |
| D1h | READ ATTRIBUTE THRESHOLDS |
| D2h | ENABLE/DISABLE ATTRIBUTE AUTOSAVE |
| D4h | EXECUTE OFF-LINE IMMEDIATE |
| D5h | SMART READ LOG |
| D6h | SMART WRITE LOG |
| D8h | ENABLE OPERATIONS |
| D9h | DISABLE OPERATIONS |
| DAh | RETURN STATUS |

**Table 7-3 General SMART Attribute Structure**

| Byte | Description |
|---|---|
| 0 | ID (Hex) |
| 1 – 2 | Status Flag |
| 3 | Value |
| 4 | Worst |
| 5*-11 | Raw Data |

*Byte 5: LSB


© 2022 Apacer Technology Inc.

**Table 7-4 SMART Attribute ID List**

| ID (Hex) | Attribute Name |
|---|---|
| 9 (0x09) | Power-on Hours |
| 12 (0x0C) | Power Cycle Count |
| 163 (0xA3) | Maximum Erase Count |
| 164 (0xA4) | Average Erase Count |
| 166 (0xA6) | Total Later Bad Block Count |
| 167 (0xA7) | SSD Protect Mode (Vendor Specific) |
| 168 (0xA8) | SATA PHY Error Count |
| 171 (0xAB) | Program Fail Count |
| 172 (0xAC) | Erase Fail Count |
| 175 (0xAF) | Bad Cluster Table Count |
| 192 (0xC0) | Unexpected Power Loss Count |
| 194 (0xC2) | Temperature |
| 231 (0xE7) | Lifetime Left |
| 241 (0xF1) | Total Sectors of Write |


© 2022 Apacer Technology Inc.

# 8. Electrical Specifications

## 8.1 Operating Voltage

Table 8-1 lists the supply voltage for ST250-M280.

**Table 8-1 Operating Range**

| Item | Range |
|---|---|
| Supply Voltage | 3.3V ± 5% (3.135-3.465V) |

## 8.2 Power Consumption

Table 8-2 lists the power consumption for ST250-M280.

**Table 8-2 Power Consumption**

| Capacity / Mode | 128 GB | 256 GB | 512 GB | 1 TB | 2 TB |
|---|---|---|---|---|---|
| **Active (mA)** | 335 | 375 | 380 | 380 | 380 |
| **Idle (mA)** | 65 | 65 | 65 | 65 | 60 |

Notes:

- All values are typical and may vary depending on flash configurations or host system settings.
- Active power is an average power measurement performed using CrystalDiskMark with 128KB sequential read/write transfers.



© 2022 Apacer Technology Inc.

# 9. Mechanical Specifications

## 9.1 Single Side (256-512GB)

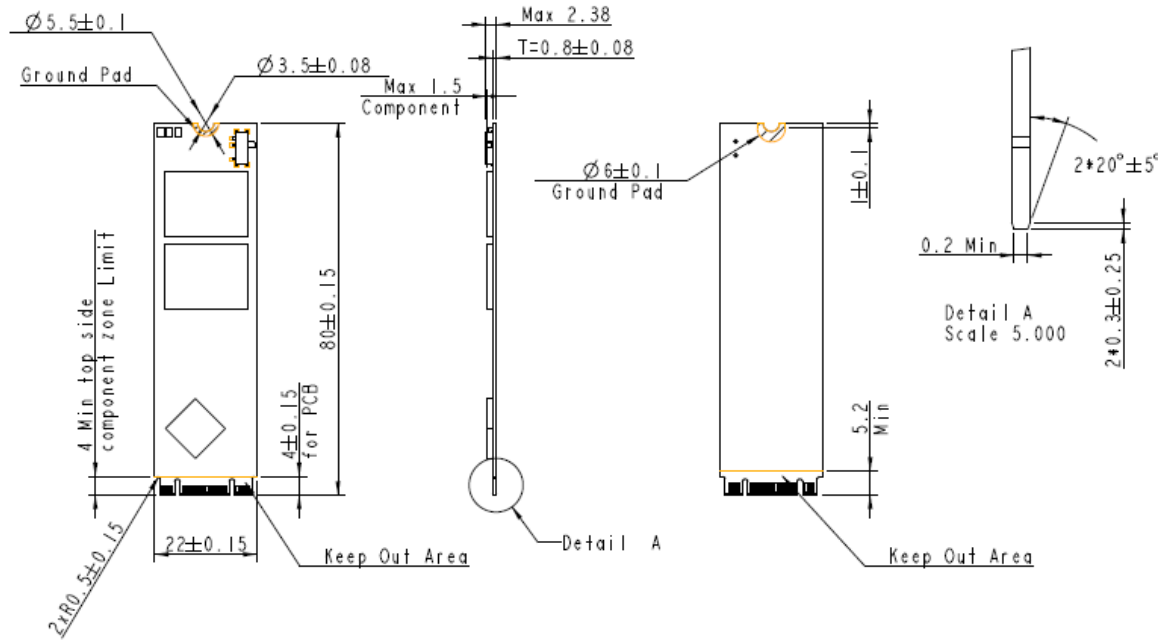


**Figure 9-1 Single-side Dimensions**

## 9.2 Double Side (1-2TB)

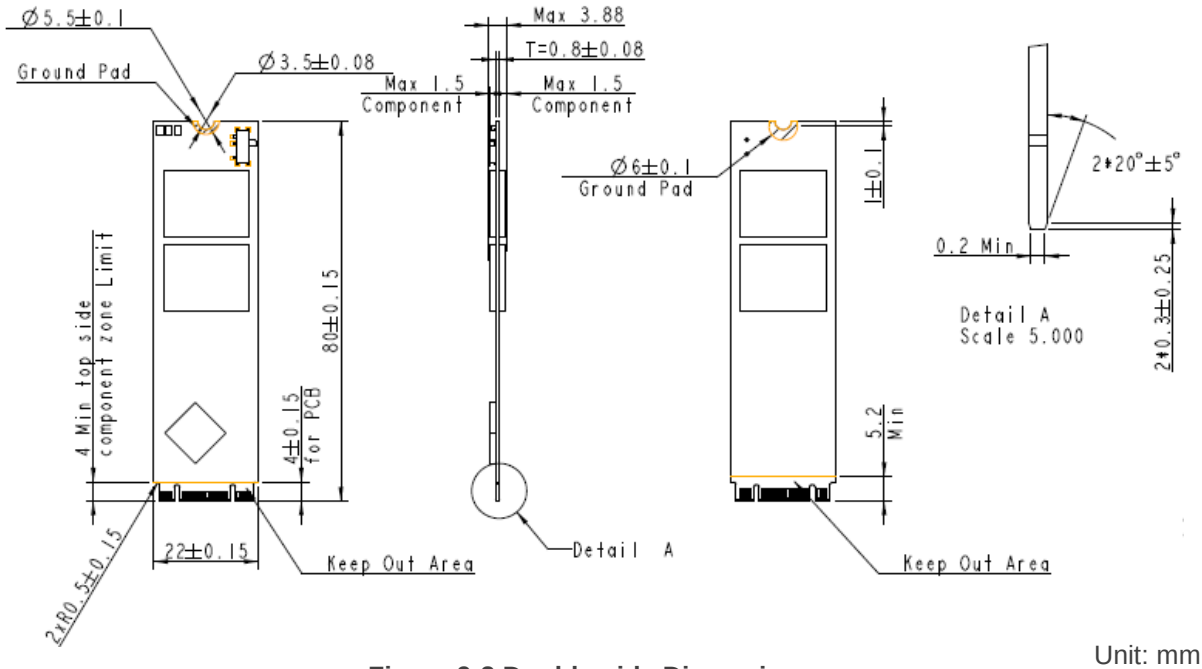


Unit: mm

**Figure 9-2 Double-side Dimensions**



© 2022 Apacer Technology Inc.

## 9.3 Net Weight

**Table 9-1 Net Weight**

| Capacity | Net Weight (g ± 5%) |
|---|---|
| 128GB | 4.92 |
| 256GB | 5.37 |
| 512GB | 5.62 |
| 1TB | 6.54 |
| 2TB | 6.52 |


© 2022 Apacer Technology Inc.

# 10. Product Ordering Information

## 10.1 Product Code Designations

Apacer's ST250-M280 SSD is available in different configurations and densities. See the chart below for a comprehensive list of options for the ST250-M280 series devices.

| Code | 1 | 2 | 3 | 4 | 5 | 6 | 7 | 8 | 9 | 10 | 11 | 12 | 13 | 14 | 15 | 16 |
|---|---|---|---|---|---|---|---|---|---|---|---|---|---|---|---|---|
| | A | 5 | 2 | . | 2 | 5 | C | X | G | X | . | X | X | X | E | S |

| | |
|---|---|
| **Code 1-3<br>(Product Line & Form Factor)** | SATA M.2 2280 |
| **Code 5-6<br>(Model/Solution)** | ST250 |
| **Code 7-8<br>(Product Capacity)** | CH: 128GB<br>CJ: 256GB<br>CK: 512GB<br>CL: 1TB<br>CM: 2TB |
| **Code 9<br>(Flash Type & Product Temp)** | 3D TLC Standard temperature |
| **Code 10<br>(Product Spec)** | A: Single side B+M key<br>B: Double side B+M key |
| **Code 12-14<br>(Version Number)** | Random numbers generated by system |
| **Code 15-16<br>(Firmware Version)** | Thermal Sensor DEVSLP |


© 2022 Apacer Technology Inc.

## 10.2 Valid Combinations

The following table lists the available models of the ST250-M280 series which are in mass production or will be in mass production. Consult your Apacer sales representative to confirm availability of valid combinations and to determine availability of new combinations.

| Capacity | Valid Combination |
|---|---|
| 128GB | A52.25CHGA.002ES |
| 256GB | A52.25CJGA.002ES |
| 512GB | A52.25CKGA.002ES |
| 1TB | A52.25CLGB.003ES |
| 2TB | A52.25CMGB.001ES |


© 2022 Apacer Technology Inc.

# Revision History

| Revision | Description | Date |
|---|---|---|
| 1.0 | Initial release | 10/29/2021 |
| 1.1 | - Updated NAND flash type from BiCS4 to BiCS5<br>- Added a note to Table 3-1 Pin Assignments | 11/23/2021 |
| 1.2 | Updated the description of 5.4 DataDefender™ | 12/20/2021 |
| 1.3 | Updated endurance on Specifications Overview page and Table 4-4 | 2/8/2022 |
| 1.4 | Added 2TB support | 2/24/2022 |
| 1.5 | - Added 128GB support<br>- Updated Performance and Power Consumption on Specifications Overview page, Table 4-2 and 8-2 | 3/11/2022 |
| 1.6 | Added Device Sleep to Flash Management on Specifications Overview page | 5/4/2022 |
| 1.7 | - Updated endurance rating and warranty period at Endurance on Specifications Overview page and 4.6 Endurance<br>- Updated pin description for Table 3-1 Pin Assignments | 7/25/2022 |
| 1.8 | - Removed DataRAID support<br>- Updated 128GB performance at Table 4-2<br>- Updated 10. Product Ordering Information due to firmware update | 10/20/2022 |


© 2022 Apacer Technology Inc.

# Global Presence


## Taiwan (Headquarters)
**Apacer Technology Inc.**
1F., No.32, Zhongcheng Rd., Tucheng Dist.,
New Taipei City 236, Taiwan R.O.C.
Tel: 886-2-2267-8000
Fax: 886-2-2267-2261
amtsales@apacer.com

## U.S.A.
**Apacer Memory America, Inc.**
46732 Lakeview Blvd., Fremont, CA 94538
Tel: 1-408-518-8699
Fax: 1-510-249-9551
sa@apacerus.com

## Japan
**Apacer Technology Corp.**
6F, Daiyontamachi Bldg., 2-17-12, Shibaura, Minato-Ku,
Tokyo, 108-0023, Japan
Tel: 81-3-5419-2668
Fax: 81-3-5419-0018
jpservices@apacer.com

## Europe
**Apacer Technology B.V.**
Science Park Eindhoven 5051 5692 EB Son,
The Netherlands
Tel: 31-40-267-0000
Fax: 31-40-290-0686
sales@apacer.nl

## China
**Apacer Electronic (Shanghai) Co., Ltd**
Room D, 22/FL, No.2, Lane 600, JieyunPlaza,
Tianshan RD, Shanghai, 200051, China
Tel: 86-21-6228-9939
Fax: 86-21-6228-9936
sales@apacer.com.cn

## India
**Apacer Technologies Pvt Ltd,**
1874, South End C Cross, 9th Block Jayanagar,
Bangalore-560069, India
Tel: 91-80-4152-9061/62
Fax: 91-80-4170-0215
sales_india@apacer.com



© 2022 Apacer Technology Inc.