Apacer

RoHS Recast Compliant

Serial ATA Flash Drive

SV250-300 Product Specifications

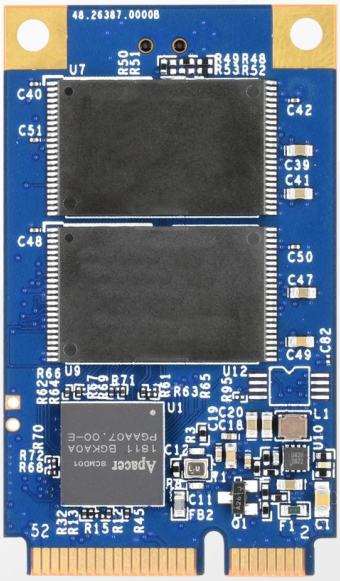

October 24, 2019

Version 1.4

Apacer Technology Inc.

1F, No.32, Zhongcheng Rd., Tucheng Dist., New Taipei City, Taiwan, R.O.C

Tel: +886-2-2267-8000 Fax: +886-2-2267-2261

www.apacer.com

Apacer

Specifications Overview:

- **Compliance with SATA Interface**
  - Serial ATA Revision 3.1
  - SATA 6.0 Gbps
  - ATA-8 command set
  - Backward compatible with SATA 1.5/3.0 Gbps
- **Capacity**
  - 30, 60, 120, 240, 480 GB
- **Performance***
  - Burst read/write: 600 MB/sec
  - Sequential read: Up to 560 MB/sec
  - Sequential write: Up to 515 MB/sec
  - Random read (4K): Up to 67,000 IOPS
  - Random write (4K): Up to 75,000 IOPS
- **Flash Management**
  - Low-Density Parity-Check (LDPC) Code
  - Global Wear Leveling
  - Flash bad-block management
  - Flash Translation Layer: Page Mapping
  - S.M.A.R.T.
  - DataDefender™
  - Devslp
  - ATA Secure Erase
  - TRIM
  - Hyper Cache Technology
  - Over-Provisioning
  - DataRAID™**
  - SMART Read Refresh™
- **NAND Flash Type:** 3D TLC (BiCS3)
- **MTBF:** >1,000,000 hours
- **Endurance (in drive writes per day: DWPD)**
  - 30 GB: 3.09 DWPD
  - 60 GB: 3.24 DWPD
  - 120 GB: 3.31 DWPD
  - 240 GB: 3.34 DWPD
  - 480 GB: 3.24 DWPD
- **Temperature Range**
  - Operating:
    Standard: 0°C to 70°C
    Wide: -40°C to 85°C
  - Storage: -40°C to 100°C
- **Supply Voltage**
  - 3.3 V ± 5%
- **Power Consumption***
  - Active mode: 425 mA
  - Idle mode: 115 mA
- **Connector Type**
  - 52-pin mSATA connector
- **SATA Power Management Modes**
- **Form Factor**
  - JEDEC MO-300
  - Dimensions: 50.80 x 29.85 x 4.85, unit: mm
  - Net Weight: 7.17g
- **Reliability**
  - Thermal Sensor
- **Security**
  - Trusted Computing Group (TCG) Opal 2.0 (optional)
  - AES 256-bit hardware encryption
  - End-to-End Data Protection
- **Shock & Vibration*****
  - Shock: 1,500 G
  - Vibration: 15 G
- **LED Indicators for Drive Behavior**
- **Write Protect Switch (optional)**
- **RoHS Recast Compliant (Complies with 2011/65/EU Standard)**

*Varies from capacities. The values for performances and power consumptions presented are typical and may vary depending on flash configurations or platform settings. The term idle refers to the standby state of the device.
**Only supported on 60-480GB model
***Non-operating

© 2019 Apacer Technology Inc.

Table of Contents

1. General Descriptions 4

2. Functional Block 4

3. Pin Assignments 5

4. Product Specifications 7

4.1 Capacity 7
4.2 Performance 7
4.3 Environmental Specifications 8
4.4 Mean Time Between Failures (MTBF) 8
4.5 Certification and Compliance 8
4.6 Endurance 9
4.7 LED Indicator Behavior 9

5. Flash Management 10

5.1 Error Correction/Detection 10
5.2 Bad Block Management 10
5.3 Global Wear Leveling 10
5.4 DataDefender™ 10
5.5 ATA Secure Erase 10
5.6 TRIM 11
5.7 Flash Translation Layer – Page Mapping 11
5.8 Devslp Mode 11
5.9 Hyper Cache Technology 11
5.10 Over-Provisioning 12
5.11 SATA Power Management 12
5.12 DataRAID™ 12
5.13 SMART Read Refresh™ 12

6. Security & Reliability Features 13

6.1 TCG Opal (optional) 13
6.2 Advanced Encryption Standard 13
6.3 End-to-End Data Protection 13
6.4 Thermal Sensor 13

7. Software Interface 14

7.1 Command Set 14

© 2019 Apacer Technology Inc.

7.2 S.M.A.R.T. 15

8. Electrical Specifications 17

8.1 Operating Voltage 17

8.2 Power Consumption 17

9. Physical Characteristics 18

9.1 Dimensions 18

9.2 Net Weight 18

9.3 Write Protect Switch (optional) 19

10. Product Ordering Information 20

10.1 Product Code Designations 20

10.2 Valid Combinations 21

© 2019 Apacer Technology Inc.

1. General Descriptions

Apacer's SV250-300 is a well-balanced solid-state disk (SSD) drive with standard form factor and great performance. Designed in SATA 6.0 Gbps interface, the SSD is able to deliver exceptional read/write speed, making it the ideal companion for heavy-loading industrial or server operations.

SV250-300 utilizes 3D NAND for higher capacity up to 480GB and provides more power efficiency than 2D NAND. Appearing in M.2 2280 mechanical dimensions, SV250-300 is believed to be the leading add-in storage solution for future host computing systems. Regarding reliability, SV250-300 is implemented with LDPC (Low Density Parity Check) ECC engine to extend SSD endurance and increase data reliability while reading raw data inside a flash chip. In addition, the drive comes with various implementations including powerful hardware ECC engine, power saving modes, wear leveling, flash block management, S.M.A.R.T., TRIM and DataDefender.

In terms of security, Advanced Encryption Standard (AES) and Trusted Computing Group (TCG) Opal ensure data security and provide users with a peace of mind knowing their data is safeguarded against unauthorized use at all times. Furthermore, with End-to-End Data Protection, data integrity can be assured at multiple points in the path to enable reliable delivery of data transfers.

2. Functional Block

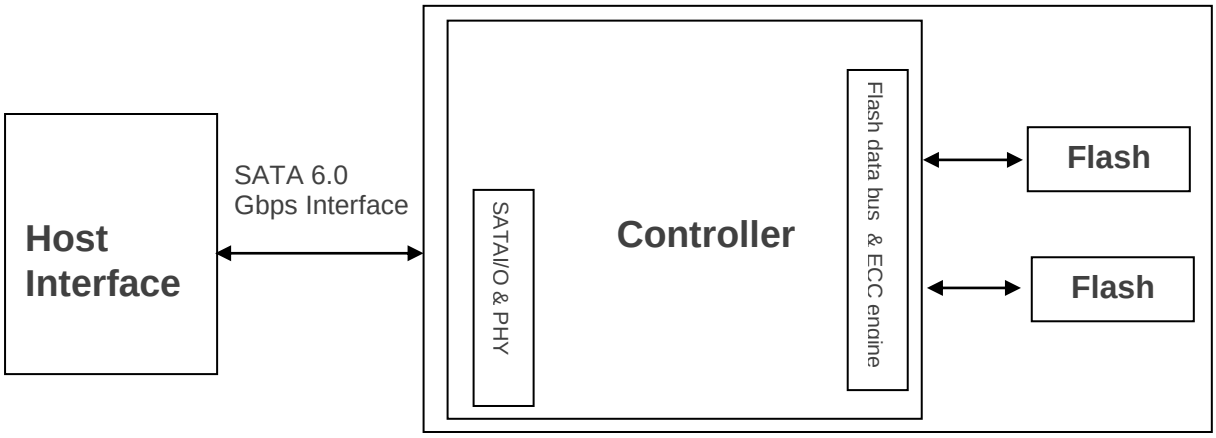

Figure 2-1 Block Diagram

© 2019 Apacer Technology Inc.

3. Pin Assignments

Pin assignment of the SM230-300 is shown in Figure 3-1 and described in Table 3-1.

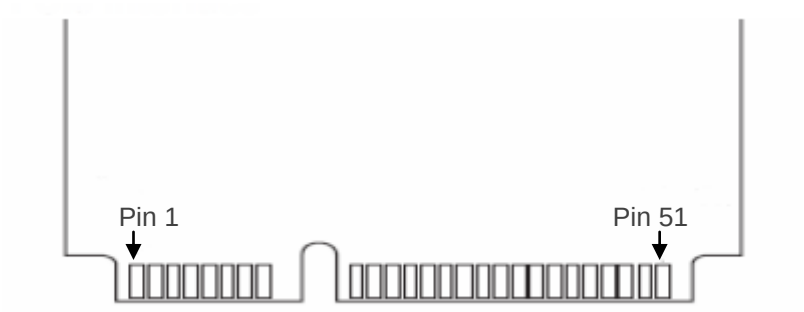

Figure 3-1 Pin Assignment

Table 3-1 Pin Assignment Description

Pin	Type	Description	Pin	Type	Description
1	Reserved	No Connect	27	GND	Ground
2	+3.3V	3.3V source	28	Reserved	No Connect
3	Reserved	No Connect	29	GND	Ground
4	GND	Ground	30	Reserved	No Connect
5	Reserved	No Connect	31	-A	Host Transmitter Differential Signal Pair
6	Reserved	No Connect	32	Reserved	No Connect
7	Reserved	No Connect	33	+A	Host Transmitter Differential Signal Pair
8	Reserved	No Connect	34	GND	Ground
9	GND	Ground	35	GND	Ground
10	Reserved	No Connect	36	Reserved	No Connect
11	Reserved	No Connect	37	GND	Ground
12	Reserved	No Connect	38	Reserved	No Connect
13	Reserved	No Connect	39	+3.3V	3.3V source
14	Reserved	No Connect	40	GND	Ground
15	GND	Ground	41	+3.3V	3.3V source
16	Reserved	No Connect	42	Reserved	No Connect
17	Reserved	No Connect	43	Device Type	No Connect
18	GND	Ground	44	DEVSLP	Device Sleep
19	Reserved	No Connect	45	Reserved	No Connect
20	Reserved	No Connect	46	Reserved	No Connect
21	GND	Ground	47	Reserved	No Connect
22	Reserved	No Connect	48	Reserved	No Connect
23	+B	Host Receiver Differential Signal Pair	49	DAS/DSS	Device Activity Signal/Disable Staggered Spin-up
24	+3.3V	3.3V Source	50	GND	Ground
25	-B	Host Receiver Differential Signal Pair	51*	Detect	0 ohm
26	GND	Ground	52	+3.3V	3.3V source

*Notes about Pin51: It is a presence detection pin that shall be connected to GND by a 0 ohm to 220 ohm Resistor on device. Please see the diagram below.

© 2019 Apacer Technology Inc.

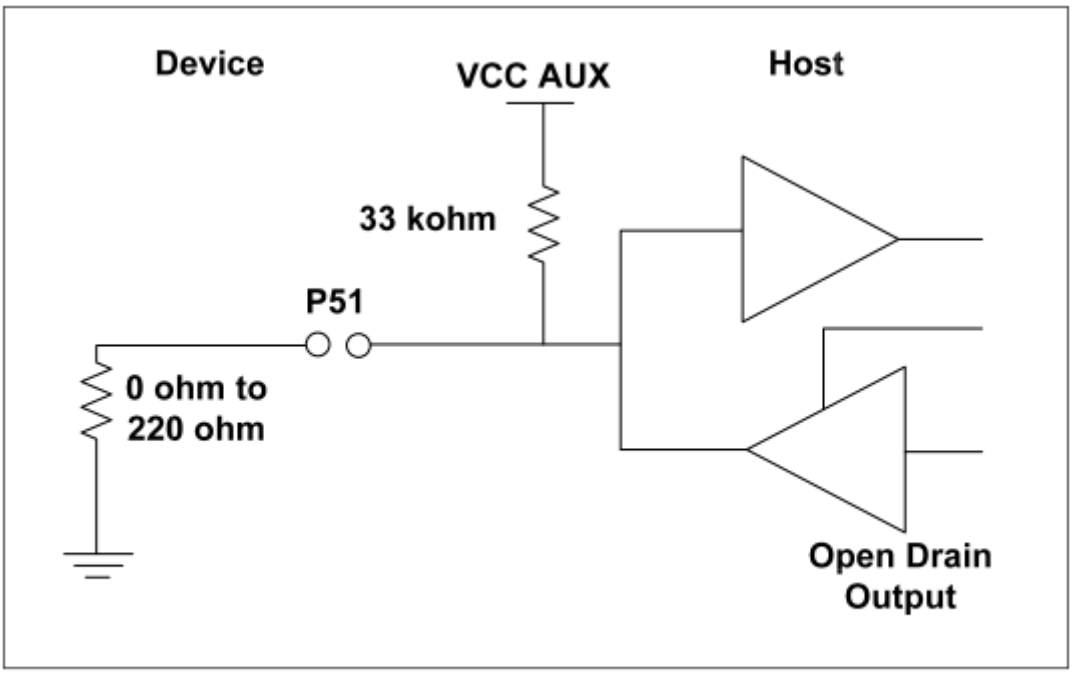

Bi-directional host-side implementation of P51 for compatibility with non-mSATA devices (informative)

© 2019 Apacer Technology Inc.

4. Product Specifications

4.1 Capacity

Capacity specifications of SV250-300 are available as shown in Table 4-1. It lists the specific capacity and the default numbers of heads, sectors and cylinders for each product line.

Table 4-1 Capacity Specifications

Capacity	Total bytes*	Cylinders	Heads	Sectors	Max LBA
30 GB	30,016,536,576	16,383	16	63	58,626,288
60 GB	60,021,538,816	16,383	16	63	117,231,408
120 GB	120,033,640,448	16,383	16	63	234,441,648
240 GB	240,056,795,136	16,383	16	63	468,862,128
480 GB	480,103,104,512	16,383	16	63	937,703,088

*Display of total bytes varies from file systems, which means not all of the bytes can be used for storage.
**Notes: 1 GB = 1,000,000,000 bytes; 1 sector = 512 bytes.
LBA count addressed in the table above indicates total user storage capacity and will remain the same throughout the lifespan of the device. However, the total usable capacity of the SSD is most likely to be less than the total physical capacity because a small portion of the capacity is reserved for device maintenance usages.

4.2 Performance

Performance of SV250-300 is listed below in Table 4-2.

Table 4-2 Performance Specifications

Capacity / Performance	30 GB	60 GB	120 GB	240 GB	480 GB
Sequential Read* (MB/s)	220	435	560	560	560
Sequential Write* (MB/s)	135	260	495	510	515
Random Read IOPS (4K)**	9,000	19,000	36,000	60,000	67,000
Random Write IOPS (4K)**	28,000	58,000	74,000	74,000	75,000

Note:
Results may differ from various flash configurations or host system setting.
*Sequential performance is based on CrystalDiskMark 5.2.1 with file size 1,000MB.
**Random performance measured using IOMeter with Queue Depth 32.

© 2019 Apacer Technology Inc.

4.3 Environmental Specifications

Environmental specifications of SV250-300 product are shown in Table 4-3.

Table 4-3 Environmental Specifications

Item	Specifications
Operating temp.	0°C to 70°C (Standard); -40°C to 85°C (Wide)
Non-operating temp.	-40°C to 100°C
Operating vibration	7.69 GRMS, 20~2000 Hz/random (compliant with MIL-STD-810G)
Non-operating vibration	4.02 GRMS, 15~2000 Hz/random (compliant with MIL-STD-810G)
Operating shock	50G, 11ms
Non-operating shock	1500G, 0.5ms (compliant with MIL-STD-883K)

Note: This Environmental Specification table indicates the conditions for testing the device. Real world usages may affect the results.

4.4 Mean Time Between Failures (MTBF)

Mean Time Between Failures (MTBF) is predicted based on reliability data for the individual components in SV250-300. The prediction result for SV250-300 is more than 1,000,000 hours.

Note: The MTBF is predicated and calculated based on “Telcordia Technologies Special Report, SR-332, Issue 2” method.

4.5 Certification and Compliance

SV250-300 complies with the following standards:

- CE
- FCC
- RoHS Recast
- MIL-STD-810

© 2019 Apacer Technology Inc.

4.6 Endurance

The endurance of a storage device is predicted by Drive Writes Per Day based on several factors related to usage, such as the amount of data written into the drive, block management conditions, and daily workload for the drive. Thus, key factors, such as Write Amplifications and the number of P/E cycles, can influence the lifespan of the drive.

Table 4-4 Endurance Specifications

Capacity	Drive Writes Per Day
30 GB	3.09
60 GB	3.24
120 GB	3.31
240 GB	3.34
480 GB	3.24

Note:

- This estimation complies with JEDEC JESD-219, Enterprise endurance workload of random data with payload size distribution.
- Flash vendor guaranteed 3D NAND TLC P/E cycle: 3K
- WAF may vary from capacity, flash configurations and writing behavior on each platform.
- 1 Terabyte = 1,024GB
- DWPD (Drive Writes Per Day) is calculated based on the number of times that user overwrites the entire capacity of an SSD per day of its lifetime during the warranty period. (3D NAND TLC warranty: 2 years)

4.7 LED Indicator Behavior

The behavior of the SV250-300 LED indicators is described in Table 4-5.

Table 4-5 LED Behavior

Location	LED	Description
LED A	DAS	LED blinks when the drive is being accessed

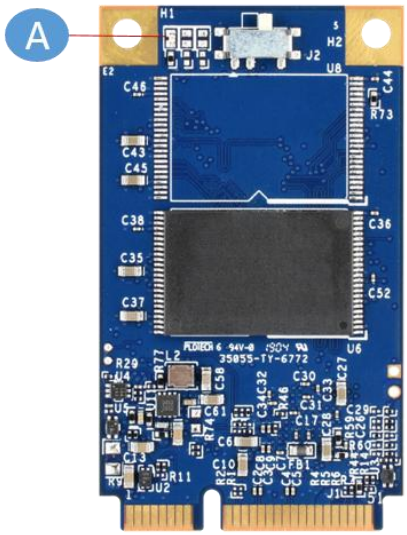

© 2019 Apacer Technology Inc.

5. Flash Management

5.1 Error Correction/Detection

SV250-300 implements a hardware ECC scheme, based on the Low Density Parity Check (LDPC). LDPC is a class of linear block error correcting code which has apparent coding gain over BCH code because LDPC code includes both hard decoding and soft decoding algorithms. With the error rate decreasing, LDPC can extend SSD endurance and increase data reliability while reading raw data inside a flash chip.

5.2 Bad Block Management

Current production technology is unable to guarantee total reliability of NAND flash memory array. When a flash memory device leaves factory, it comes with a minimal number of initial bad blocks during production or out-of-factory as there is no currently known technology that produce flash chips free of bad blocks. In addition, bad blocks may develop during program/erase cycles. When host performs program/erase command on a block, bad block may appear in Status Register. Since bad blocks are inevitable, the solution is to keep them in control. Apacer flash devices are programmed with ECC, page mapping technique and S.M.A.R.T to reduce invalidity or error. Once bad blocks are detected, data in those blocks will be transferred to free blocks and error will be corrected by designated algorithms.

5.3 Global Wear Leveling

Flash memory devices differ from Hard Disk Drives (HDDs) in terms of how blocks are utilized. For HDDs, when a change is made to stored data, like erase or update, the controller mechanism on HDDs will perform overwrites on blocks. Unlike HDDs, flash blocks cannot be overwritten and each P/E cycle wears down the lifespan of blocks gradually. Repeatedly program/erase cycles performed on the same memory cells will eventually cause some blocks to age faster than others. This would bring flash storages to their end of service term sooner. Global wear leveling is an important mechanism that levels out the wearing of all blocks so that the wearing-down of all blocks can be almost evenly distributed. This will increase the lifespan of SSDs.

5.4 DataDefender™

Apacer's DataDefender combines both firmware and hardware mechanisms to ensure data integrity. When power disruption occurs, the hardware mechanism will notice and trigger the controller to run multiple write-to-flash cycles to store data. Then the firmware will check that the data was correctly written to the NAND flash after the power disruption, preventing data loss.

5.5 ATA Secure Erase

ATA Secure Erase is an ATA disk purging command currently embedded in most of the storage drives. Defined in ATA specifications, (ATA) Secure Erase is part of Security Feature Set that allows storage drives to erase all user data areas. The erase process usually runs on the firmware level as most of the ATA-based storage media currently in the market are built-in with this command. ATA Secure Erase can securely wipe out the user data in the drive and protects it from malicious attack.

© 2019 Apacer Technology Inc.

5.6 TRIM

TRIM is a SATA command that helps improve the read/write performance and efficiency of solid-state drives (SSD). The command enables the host operating system to inform SSD controller which blocks contain invalid data, mostly because of the erase commands from host. The invalid will be discarded permanently and the SSD will retain more space for itself.

5.7 Flash Translation Layer – Page Mapping

Page mapping is an advanced flash management technology whose essence lies in the ability to gather data, distribute the data into flash pages automatically, and then schedule the data to be evenly written. Page-level mapping uses one page as the unit of mapping. The most important characteristic is that each logical page can be mapped to any physical page on the flash memory device. This mapping algorithm allows different sizes of data to be written to a block as if the data is written to a data pool and it does not need to take extra operations to process a write command. Thus, page mapping is adopted to increase random access speed and improve SSD lifespan, reduce block erase frequency, and achieve optimized performance and lifespan.

5.8 Devslp Mode

Device Sleep is a feature that allows SATA devices to enter a low power mode by designating a particular pin as DEVSLP signal with an aim to reducing power consumption.

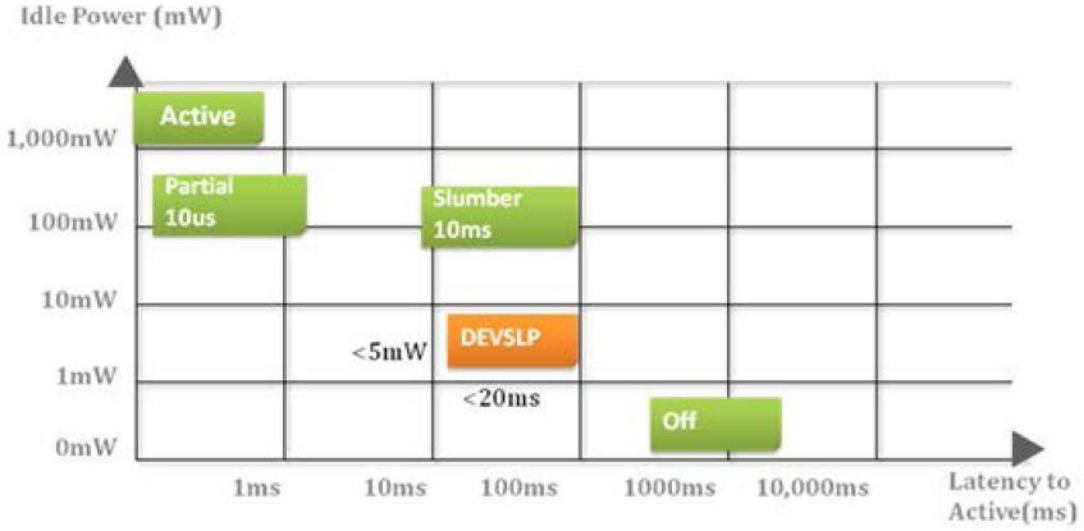

5.9 Hyper Cache Technology

Apacer proprietary Hyper Cache technology uses a portion of the available capacity as SLC (1bit-per-cell) NAND flash memory, called Hyper cache mode. When data is written to SSD, the firmware will direct the data to Hyper Cache mode, providing excellent performance to handle various scenarios in industrial use.

© 2019 Apacer Technology Inc.

5.10 Over-Provisioning

Over-Provisioning (OP) is a certain portion of the SSD capacity exclusively for increasing Garbage Collection (GC) efficiency, especially when the SSD is filled to full capacity or performs a heavy mixed-random workload. OP has the advantages of providing extended life expectancy, reliable data integrity, and high sustained write performance.

5.11 SATA Power Management

By complying with SATA 6.0 Gb/s specifications, the SSD supports the following SATA power saving modes:

- ACTIVE: PHY ready, full power, Tx & Rx operational
- PARTIAL: Reduces power, resumes in under 10 µs (microseconds)
- SLUMBER: Reduces power, resumes in under 10 ms (milliseconds)
- HIPM: Host-Initiated Power Management
- DIPM: Device-Initiated Power Management
- AUTO-SLUMBER: Automatic transition from partial to slumber.
- Device Sleep (DevSleep or DEVSLP): PHY powered down; power consumption $\leqq$ 5 mW; host assertion time $\leqq$ 10 ms; exit timeout from this state $\leqq$ 20 ms (unless specified otherwise in SATA Identify Device Log).

Note: The behaviors of power management features would depend on host/device settings.

5.12 DataRAID™

Apacer's DataRAID algorithm applies an additional level of protection and error-checking. Using this algorithm, a certain amount of space is given over to aggregating and resaving the existing parity data used for error checking. So, in the event that data becomes corrupted, the parity data can be compared to the existing uncorrupted data and the content of the corrupted data can be rebuilt.

5.13 SMART Read Refresh™

Apacer's SMART Read Refresh plays a proactive role in avoiding read disturb errors from occurring to ensure health status of all blocks of NAND flash. Developed for read-intensive applications in particular, SMART Read Refresh is employed to make sure that during read operations, when the read operation threshold is reached, the data is refreshed by re-writing it to a different block for subsequent use.

© 2019 Apacer Technology Inc.

6. Security & Reliability Features

6.1 TCG Opal (optional)

Developed by the Trusted Computing Group (TCG), an organization whose members work together to formulate industry standards, Opal is a set of security specifications used for applying hardware-based encryption to storage devices.

Hardware encryption has many advantages. First of all, it transfers the computational load of the encryption process to dedicated processors, reducing the stress on the host system's CPU. In addition, storage devices complying with Opal specifications are self-encryption devices. Opal specifications also feature boot authentication. When the drive is being accessed, the shadow MBR will request the drive password at boot. The drive will only unlock and decrypt if the correct password is supplied. The other feature is LBA-specific permissions. Users are assigned different permissions for LBA ranges created by the device administrator. Each LBA range is password-protected and can only be accessed by users with the correct key to perform permitted actions (read/write/erase).

6.2 Advanced Encryption Standard

Advanced Encryption Standard (AES) is a specification for the encryption of electronic data. AES has been adopted by the U.S. government since 2001 to protect classified information and is now widely implemented in embedded computing applications. The AES algorithm used in software and hardware is symmetric so that encrypting/decrypting requires the same encryption key. Without the key, the encrypted data is inaccessible to ensure information security.

Notably in flash memory applications, AES 256-bit hardware encryption is the mainstream to protect sensitive or confidential data. The hardware encryption provides better performance, reliability, and security than software encryption. It uses a dedicated processor, which is built inside the controller, to process the encryption and decryption. This enormously shortens the processing time and makes it efficient.

6.3 End-to-End Data Protection

End-to-End Data Protection is a feature implemented in Apacer SSD products that extends error control to cover the entire path from the host computer to the drive and back, and ensure data integrity at multiple points in the path to enable reliable delivery of data transfers. Unlike ECC which does not exhibit the ability to determine the occurrence of errors throughout the process of data transmission, End-to-End Data Protection allows SSD controller to identify an error created anywhere in the path and report the error to the host computer before it is written to the drive. This error-checking and error-reporting mechanism therefore guarantees the trustworthiness and reliability of the SSD.

6.4 Thermal Sensor

Apacer Thermal Sensor is a digital temperature sensor with serial interface. By using a designated pin for transmission, storage device owners are able to read temperature data.

© 2019 Apacer Technology Inc.

7. Software Interface

7.1 Command Set

This section defines the software requirements and the format of the commands the host sends to SV250-300. Commands are issued to SV250-300 by loading the required registers in the command block with the supplied parameters, and then writing the command code to the Command register.

Table 7-1 Command Set

Code	Command	Code	Command
E5h	Check Power Mode	F4h	Security Erase Unit
06h	Data Set Management	F5h	Security Freeze Lock
92h	Download Microcode	F1h	Security Set Password
90h	Execute Device Diagnostic	F2h	Security Unlock
E7h	Flush Cache	70h	Seek
EAh	Flush Cache EXT	EFh	Set Features
ECh	Identify Device	C6h	Set Multiple Mode
E3h	Idle	E6h	Sleep
E1h	Idle Immediate	B0h	SMART
91h	Initialize Device Parameters	E2h	Standby
E4h	Read Buffer	E0h	Standby Immediate
C8h	Read DMA	E8h	Write Buffer
25h	Read DMA EXT	CAh	Write DMA
60h	Read FPDMA Queued	35h	Write DMA EXT
C4h	Read Multiple	3Dh	Write DMA FUA EXT
29h	Read Multiple EXT	61h	Write FPDMA Queued
2Fh	Read Log EXT	3Fh	Write Log EXT
47h	Read Log DMA EXT	57h	Write Log DMA EXT
20h	Read Sector	C5h	Write Multiple
24h	Read Sector EXT	39h	Write Multiple EXT
40h	Read Verify Sectors	CEh	Write Multiple FUA EXT
42h	Read Verify Sectors EXT	30h	Write Sector
10h	Recalibrate	34h	Write Sector EXT
F6h	Security Disable Password	45h	Write Uncorrectable EXT
F3h	Security Erase Prepare		

Table 7-2 Trusted Computing Feature Set

Code	Command	Code	Command
5Ch	Trusted Receive	5Eh	Trusted Send
5Dh	Trusted Receive DMA	5Fh	Trusted Send DMA

Note: This feature set is only applicable to products implemented with AES and Opal functions.

© 2019 Apacer Technology Inc.

7.2 S.M.A.R.T.

S.M.A.R.T. is an abbreviation for Self-Monitoring, Analysis and Reporting Technology, a self-monitoring system that provides indicators of drive health as well as potential disk problems. It serves as a warning for users from unscheduled downtime by monitoring and displaying critical drive information. Ideally, this should allow taking proactive actions to prevent drive failure and make use of S.M.A.R.T. information for future product development reference.

Apacer devices use the standard SMART command B0h to read data out from the drive to activate our S.M.A.R.T. feature that complies with the ATA/ATAPI specifications. S.M.A.R.T. Attribute IDs shall include initial bad block count, total later bad block count, maximum erase count, average erase count, power on hours and power cycle. When the S.M.A.R.T. Utility running on the host, it analyzes and reports the disk status to the host before the device reaches in critical condition.

Note: Attribute IDs may vary from product models due to various solution design and supporting capabilities.

Apacer memory products come with S.M.A.R.T. commands and subcommands for users to obtain information of drive status and to predict potential drive failures. Users can take advantage of the following commands/subcommands to monitor the health of the drive.

Code	SMART Subcommand
D0h	READ DATA
D1h	READ ATTRIBUTE THRESHOLDS
D2h	Enable/Disable Attribute Autosave
D4h	Execute Off-line Immediate
D5h	Read Log (optional)
D6h	Write Log (optional)
D8h	Enable Operations
D9h	Disable operations
DAh	Return Status

General SMART attribute structure

Byte	Description
0	ID (Hex)
1 – 2	Status flag
3	Value
4	Worst
5*-11	Raw Data

*Byte 5: LSB

© 2019 Apacer Technology Inc.

SMART attribute ID list

ID (Hex)	Attribute Name
9 (0x09)	Power-on hours
12 (0x0C)	Power cycle count
163 (0xA3)	Max. erase count
164 (0xA4)	Avg. erase count
166 (0xA6)	Total later bad block count
167 (0xA7)	SSD Protect Mode (vendor specific)
168 (0xA8)	SATA PHY Error Count
171 (0xAB)	Program fail count
172 (0xAC)	Erase fail count
175 (0xAF)	Bad Cluster Table Count
192 (0xC0)	Unexpected Power Loss Count
194 (0xC2)	Temperature
231 (0xE7)	Lifetime left
241 (0xF1)	Total sectors of write

© 2019 Apacer Technology Inc.

8. Electrical Specifications

8.1 Operating Voltage

Table 8-1 lists the supply voltage for SV250-300.

Caution: **Absolute Maximum Stress Ratings –** Applied conditions greater than those listed under "Absolute Maximum Stress Ratings" may cause permanent damage to the device. This is a stress rating only and functional operation of the device at these conditions or conditions greater than those defined in the operational sections of this data sheet is not implied. Exposure to absolute maximum stress rating conditions may affect device reliability.

Table 8-1 Operating Range

Item	Range
Supply Voltage	3.3V ± 5% (3.135-3.465V)

8.2 Power Consumption

Table 8-2 lists the power consumption for SV250-300.

Table 8-2 Power Consumption

Capacity / Mode	30 GB	60 GB	120 GB	240 GB	480 GB
Active (mA)	250	345	400	420	425
Idle (mA)	115	115	115	115	115

Note:
*All values are typical and may vary depending on flash configurations or host system settings.
**Active power is an average power measurement performed using CrystalDiskMark with 128KB sequential read/write transfers.

© 2019 Apacer Technology Inc.

9. Physical Characteristics

9.1 Dimensions

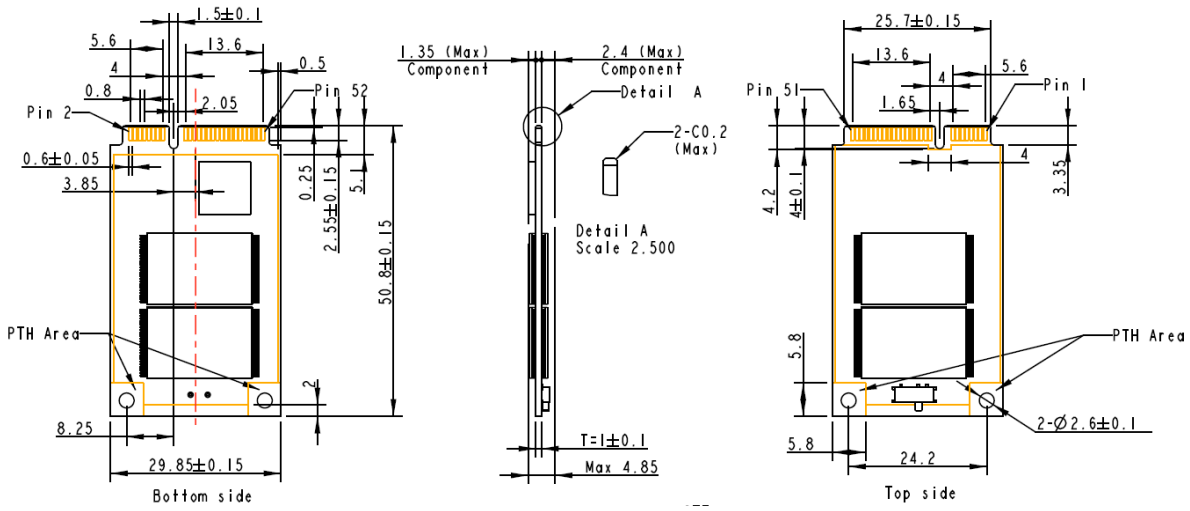

9.2 Net Weight

Capacity	Net Weight (g)
30GB	5.44
60GB	6.06
120GB	7.08
240GB	6.88
480GB	7.17

© 2019 Apacer Technology Inc.

9.3 Write Protect Switch (optional)

Apacer implements the Virtual Write scheme that allows write commands to go through the flash controller and data temporarily stored, but no data has been actually written into the flash. Once the system is reset and rebooted, the temporarily stored data will be lost and nowhere to be found in the system. Since the Virtual Write scheme runs at device level, it requires no software or driver installation and is independent from the host OS.

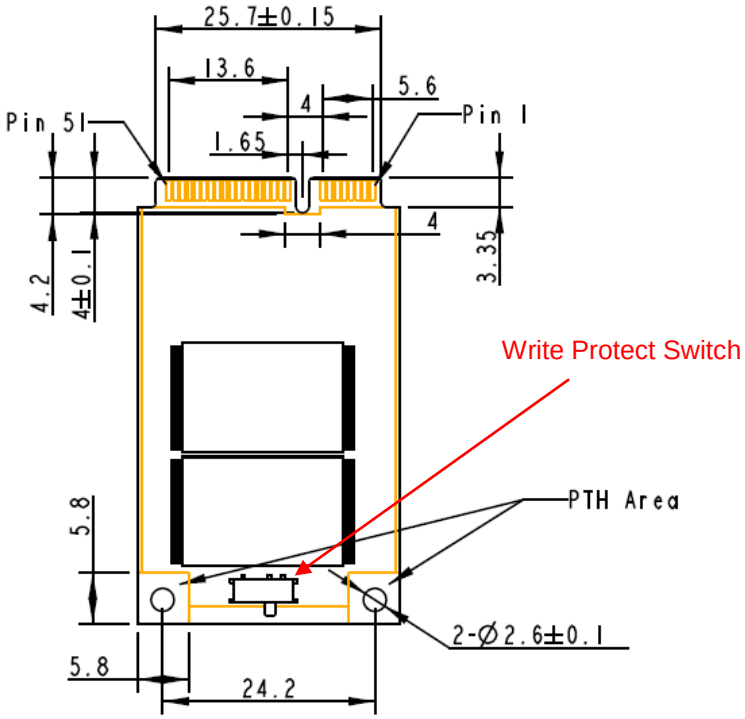

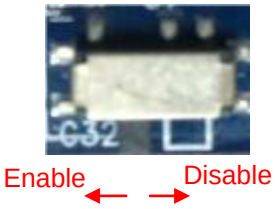

© 2019 Apacer Technology Inc.

10. Product Ordering Information

10.1 Product Code Designations

Code	1	2	3	4	5	6	7	8	9	10	11	12	13	14	15	16
	A	7	2	.	2	5	5	X	X	X	.	X	X	X	0	4

Code 1st ~ 3rd (Product Line & Form Factor)	SATA + mSATA/MO300
Code 5th ~ 6th (Model/Solution)	SV250
Code 7th ~ 8th (Product Capacity)	5F: 30GB 5G: 60GB 5H: 120GB 5J: 240GB 5K: 480GB
Code 9th (Flash Type & Product Temp)	G: 3D TLC Standard temperature H: 3D TLC Wide temperature
Code 10th (Product Spec)	A: MO300 B: MO300 with Write Protect switch
Code 12th ~ 14th (Version Number)	Random numbers generated by system
Code 15th ~ 16th (Firmware Version)	04: Standard with Devslp (OP)

© 2019 Apacer Technology Inc.

10.2 Valid Combinations

10.2.1 Without Write Protect Switch

Capacity	Standard Temperature	Wide Temperature
30GB	A72.255FGA.00104	A72.255FHA.00104
60GB	A72.255GGA.00104	A72.255GHA.00104
120GB	A72.255HGA.00104	A72.255HHA.00104
240GB	A72.255JGA.00104	A72.255JHA.00104
480GB	A72.255KGA.00104	A72.255KHA.00104

10.2.2 With Write Protect Switch (optional)

Capacity	Standard Temperature	Wide Temperature
30GB	A72.255FGB.00104	A72.255FHB.00104
60GB	A72.255GGB.00104	A72.255GHB.00104
120GB	A72.255HGB.00104	A72.255HHB.00104
240GB	A72.255JGB.00104	A72.255JHB.00104
480GB	A72.255KGB.00104	A72.255KHB.00104

Note: Valid combinations are those products in mass production or will be in mass production. Consult your Apacer sales representative to confirm availability of valid combinations and to determine availability of new combinations.

© 2019 Apacer Technology Inc.

Revision History

Revision	Date	Description	Remark
1.0	4/29/2019	Official release	
1.1	5/2/2019	Changed Advanced Encryption Standard from optional to standard feature	
1.2	5/6/2019	- Updated product photo on the cover page - Changed Write Protect from standard feature to optional feature - Updated 10. Product Ordering Information by adding “A” to code 10th	
1.3	5/20/2019	Updated 3. Pin Assignments	
1.4	10/24/2019	Updated 7.1 Command Set	

© 2019 Apacer Technology Inc.

Global Presence

Taiwan (Headquarters)
Apacer Technology Inc.
1F., No.32, Zhongcheng Rd., Tucheng Dist.,
New Taipei City 236, Taiwan R.O.C.
Tel: 886-2-2267-8000
Fax: 886-2-2267-2261
amtsales@apacer.com

U.S.A.
Apacer Memory America, Inc.
46732 Lakeview Blvd., Fremont, CA 94538
Tel: 1-408-518-8699
Fax: 1-510-249-9551
sa@apacerus.com

Japan
Apacer Technology Corp.
6F, Daiyontamachi Bldg., 2-17-12, Shibaura, Minato-Ku,
Tokyo, 108-0023, Japan
Tel: 81-3-5419-2668
Fax: 81-3-5419-0018
jpservices@apacer.com

Europe
Apacer Technology B.V.
Science Park Eindhoven 5051 5692 EB Son,
The Netherlands
Tel: 31-40-267-0000
Fax: 31-40-290-0686
sales@apacer.nl

China
Apacer Electronic (Shanghai) Co., Ltd
Room D, 22/FL, No.2, Lane 600, JieyunPlaza,
Tianshan RD, Shanghai, 200051, China
Tel: 86-21-6228-9939
Fax: 86-21-6228-9936
sales@apacer.com.cn

India
Apacer Technologies Pvt Ltd,
1874, South End C Cross, 9th Block Jayanagar,
Bangalore-560069, India
Tel: 91-80-4152-9061/62
Fax: 91-80-4170-0215
sales_india@apacer.com

© 2019 Apacer Technology Inc.