Apacer

RoHS Recast Compliant

Serial ATA Flash Drive

Industrial SV250-300 BiCS3 Product Specifications

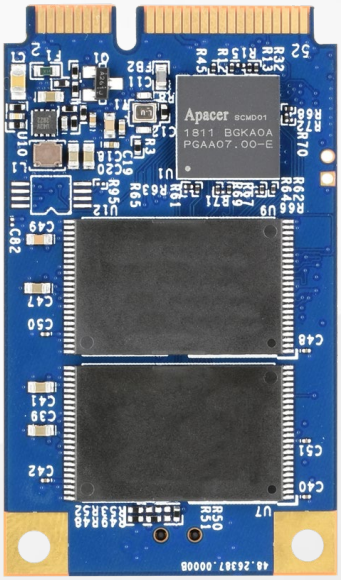

July 4, 2024

Version 2.2

Apacer Technology Inc.
1F, No.32, Zhongcheng Rd., Tucheng Dist., New Taipei City, Taiwan, R.O.C
Tel: +886-2-2267-8000 Fax: +886-2-2267-2261
www.apacer.com

Apacer

Specifications Overview:

- **Compliance with SATA Revision 3.2**
  - SATA 6 Gb/s interface
  - ATA-8 command set
  - Backward compatible with SATA 1.5/3 Gb/s
- **Capacity**
  - 30, 60, 120, 240, 480 GB
- **Performance**[1]
  - Burst read/write: 600 MB/sec
  - Sequential read: Up to 555 MB/sec
  - Sequential write: Up to 515 MB/sec
  - Random read (4K): Up to 65,000 IOPS
  - Random write (4K): Up to 70,000 IOPS
- **Flash Management**
  - Low-Density Parity-Check (LDPC) Code
  - Global Wear Leveling
  - Flash bad-block management
  - Flash Translation Layer: Page Mapping
  - S.M.A.R.T.
  - DataDefender™
  - Device Sleep
  - ATA Secure Erase
  - TRIM
  - Hyper Cache Technology
  - Over-provisioning
  - SATA Power Management
  - DataRAID™[2]
  - SMART Read Refresh™
- **NAND Flash Type:** 3D TLC (BiCS3)
- **MTBF:** >3,000,000 hours
- **Endurance (in drive writes per day: DWPD)**
  - 30 GB: 2.18 DWPD
  - 60 GB: 2.28 DWPD
  - 120 GB: 2.21 DWPD
  - 240 GB: 2.27 DWPD
  - 480 GB: 2.28 DWPD
- **Temperature Range**
  - Operating (Tc):
    - Standard: 0°C to 70°C
    - Wide: -40°C to 85°C
  - Storage (Ta): -55°C to 100°C
- **Supply Voltage**
  - 3.3V ± 5%
- **Power Consumption**[1]
  - Active mode (Max.): 380 mA
  - Idle mode: 75 mA
- **Security**
  - AES 256-bit hardware encryption
  - Trusted Computing Group (TCG) Opal 2.0 (optional)
  - Write Protect[3] (optional)
- **Reliability**
  - Thermal Sensor
  - End-to-End Data Protection
- **Connector Type**
  - 52-pin mSATA connector
- **Physical Characteristics**
  - Form factor: mSATA, JEDEC MO-300
  - Dimensions: 50.80 x 29.85 x 4.85(max.), unit: mm
  - Net weight: 7.17g ± 5%
- **LED Indicator for Drive Behavior**
- **RoHS Recast Compliant (Complies with 2011/65/EU Standard)**

Notes:
1. Varies from capacities. The values for performances and power consumptions presented are typical and may vary depending on flash configurations or platform settings. The term idle refers to the standby state of the device.
2. Supported on standard model of all capacities and TCG Opal-supported model of 120-480GB capacities.
3. Using mechanical switch

© 2024 Apacer Technology Inc.

Table of Contents

1. General Description 4

2. Functional Block 4

3. Pin Assignments 5

4. Product Specifications 7

4.1 Capacity 7
4.2 Performance 7
4.3 Environmental Specifications 8
4.4 Mean Time Between Failures (MTBF) 8
4.5 Certification and Compliance 8
4.6 Endurance 9
4.7 LED Indicator Behavior 9

5. Flash Management 10

5.1 Error Correction/Detection 10
5.2 Bad Block Management 10
5.3 Global Wear Leveling 10
5.4 DataDefender™ 10
5.5 ATA Secure Erase 10
5.6 TRIM 11
5.7 Flash Translation Layer – Page Mapping 11
5.8 Device Sleep (DevSleep or DEVSLP) Mode 11
5.9 Hyper Cache Technology 11
5.10 Over-provisioning 12
5.11 SATA Power Management 12
5.12 DataRAID™ 12
5.13 SMART Read Refresh™ 12

6. Security and Reliability Features 13

6.1 Advanced Encryption Standard 13
6.2 TCG Opal (optional) 13
6.3 Write Protect (optional) 13
6.4 End-to-End Data Protection 13
6.5 Thermal Sensor 14

7. Software Interface 15

© 2024 Apacer Technology Inc.

7.1 Command Set 15
7.2 S.M.A.R.T. 16

8. Electrical Specifications 17

8.1 Operating Voltage 17
8.2 Power Consumption 17

9. Mechanical Specifications 18

9.1 Physical Information 18
9.2 Write Protect Switch (optional) 18

10. Product Ordering Information 19

10.1 Product Code Designations 19
10.2 Valid Combinations 20

© 2024 Apacer Technology Inc.

1. General Description

Apacer SV250-300 is a well-balanced solid-state disk (SSD) with a standard form factor and excellent performance. Designed with a SATA 6 Gb/s interface, SV250-300 fully complies with the latest SATA Revision 3.2 specifications, delivering exceptional read/write speeds. This makes it an ideal companion for demanding industrial or server operations.

Utilizing 3D NAND technology for higher capacities up to 480GB and providing greater power efficiency than 2D NAND, SV250-300 is built with a powerful SATA controller that supports on-the-module ECC and an efficient wear leveling scheme. It is implemented with an LDPC (Low-Density Parity Check) ECC engine to extend SSD endurance and increase data reliability. Additionally, SV250-300 includes a built-in thermal sensor to monitor the SSD's temperature via S.M.A.R.T commands, preventing overheating. Operating on a 6 Gb/s interface, SV250-300 incorporates Apacer's latest S.M.A.R.T. technology, primarily oriented toward the latest SATA interface SSDs, for drive lifetime monitoring and analysis. For highly-intensive applications, End-to-End Data Protection ensures data integrity is maintained at multiple points along the data transfer path, enabling reliable data delivery.

In terms of security, Advanced Encryption Standard (AES), Trusted Computing Group (TCG) Opal, and Write Protect protect data, providing users with confidence that their information is secure from unauthorized access. SV250-300 also includes advanced features such as flash block management, DataDefender, ATA secure erase, TRIM, page mapping, device sleep, Hyper Cache technology, over-provisioning, power-saving modes, DataRAID, and SMART Read Refresh.

With its exceptional performance, reliable dependability, and enhanced data protection, SV250-300 is the ideal storage or cache solution for a variety of applications, including industrial, imaging, computing, and enterprise markets.

2. Functional Block

Apacer SV250-300 includes a single-chip controller and flash media. The controller integrates the flash management unit to support multi-channel, multi-bank flash arrays. Figure 2-1 shows the functional block diagram.

Note: The actual number of NAND flash used on Apacer SV250-300 varies from capacities. The illustration is for reference only.

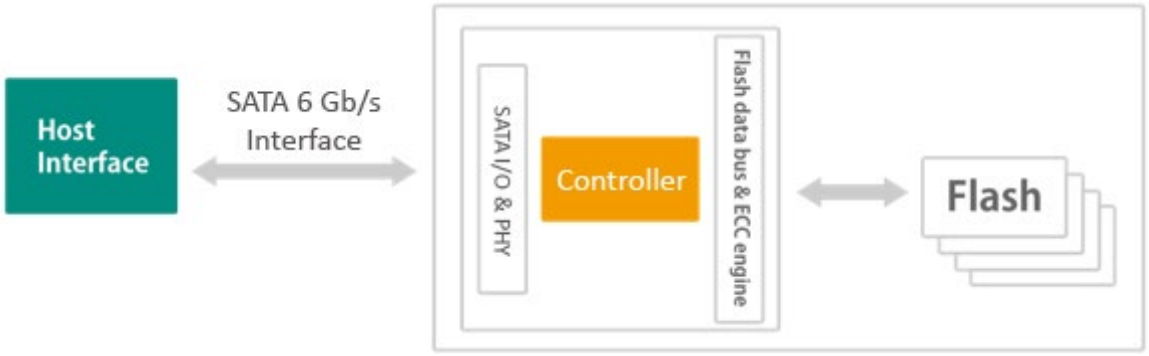

Figure 2-1 Functional Block Diagram

© 2024 Apacer Technology Inc.

3. Pin Assignments

Pin assignment of the SV250-300 is shown in Figure 3-1 and described in Table 3-1.

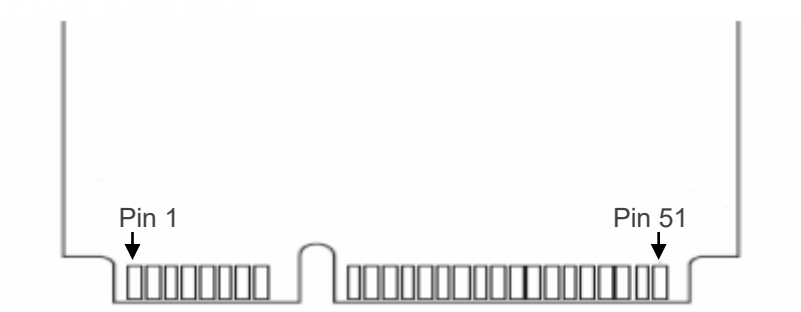

Figure 3-1 Pin Assignments

Table 3-1 Pin Assignments

Pin #	Type	Description	Pin #	Type	Description
1	Reserved	No Connect	27	GND	Ground
2	+3.3V	3.3V source	28	Reserved	No Connect
3	Reserved	No Connect	29	GND	Ground
4	GND	Ground	30	Reserved	No Connect
5	Reserved	No Connect	31	-A	Host Transmitter Differential Signal Pair
6	Reserved	No Connect	32	Reserved	No Connect
7	Reserved	No Connect	33	+A	Host Transmitter Differential Signal Pair
8	Reserved	No Connect	34	GND	Ground
9	GND	Ground	35	GND	Ground
10	Reserved	No Connect	36	Reserved	No Connect
11	Reserved	No Connect	37	GND	Ground
12	Reserved	No Connect	38	Reserved	No Connect
13	Reserved	No Connect	39	+3.3V	3.3V source
14	Reserved	No Connect	40	GND	Ground
15	GND	Ground	41	+3.3V	3.3V source
16	Reserved	No Connect	42	Reserved	No Connect
17	Reserved	No Connect	43	Device Type	No Connect
18	GND	Ground	44	DEVSLP	Device Sleep
19	Reserved	Reserved for Apacer use only[1]	45	Reserved	Reserved for Apacer use only[1]
20	Reserved	No Connect	46	Reserved	No Connect
21	GND	Ground	47	Reserved	Reserved for Apacer use only[1]
22	Reserved	No Connect	48	Reserved	No Connect
23	+B	Host Receiver Differential Signal Pair	49	DAS/DSS	Device Activity Signal/Disable Staggered Spin-up

© 2024 Apacer Technology Inc.

Pin #	Type	Description	Pin #	Type	Description
24	+3.3V	3.3V Source	50	GND	Ground
25	-B	Host Receiver Differential Signal Pair	51[2]	Detect	0 ohm
26	GND	Ground	52	+3.3V	3.3V source

Notes:
1. Reserved by Apacer, please do not connect to a host.
2. It is a presence detection pin that shall be connected to GND by a 0 ohm to 220 ohm Resistor on device. Please see the diagram below.

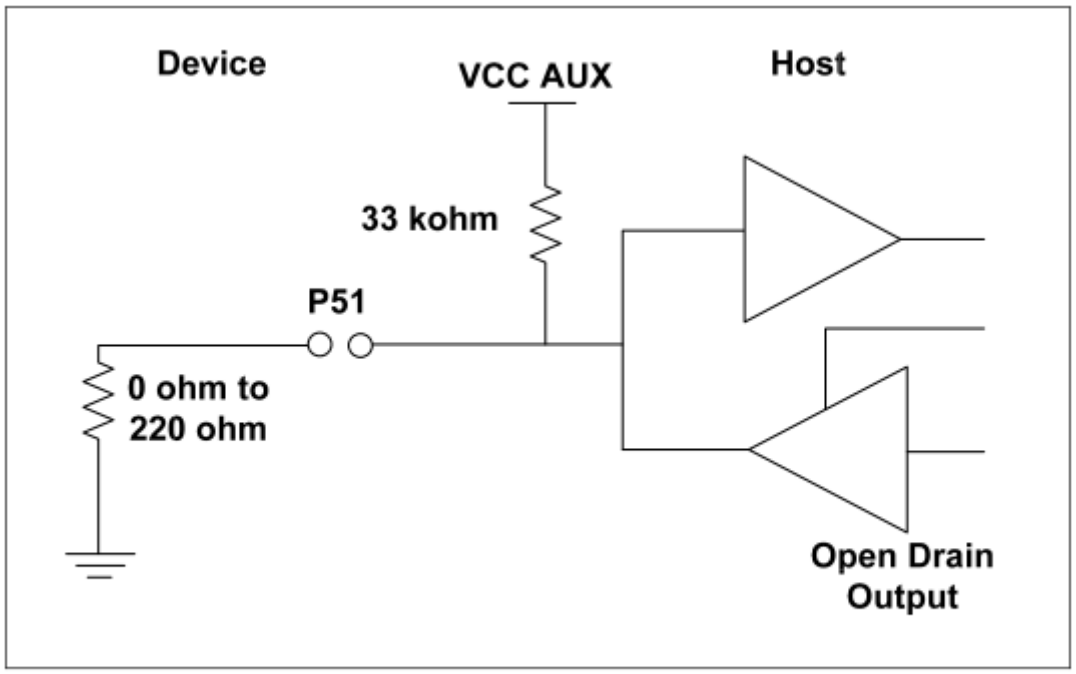

Bi-directional host-side implementation of P51 for compatibility with non-mSATA devices (informative)

© 2024 Apacer Technology Inc.

4. Product Specifications

4.1 Capacity

Capacity specifications of SV250-300 are available as shown in Table 4-1. It lists the specific capacity and the default numbers of heads, sectors and cylinders for each product line.

Table 4-1 Capacity Specifications

Capacity	Total bytes	Cylinders	Heads	Sectors	Total LBA
30 GB	30,016,659,456	16,383	16	63	58,626,288
60 GB	60,022,480,896	16,383	16	63	117,231,408
120 GB	120,034,123,776	16,383	16	63	234,441,648
240 GB	240,057,409,536	16,383	16	63	468,862,128
480 GB	480,103,981,056	16,383	16	63	937,703,088

Notes:
- Display of total bytes varies from operating systems.
- 1 GB = 1,000,000,000 bytes; 1 sector = 512 bytes.
- LBA count addressed in the table above indicates total user storage capacity and will remain the same throughout the lifespan of the device. However, the total usable capacity of the SSD is most likely to be less than the total physical capacity because a small portion of the capacity is reserved for device maintenance usages.

4.2 Performance

Performance of SV250-300 is listed below in Table 4-2.

Table 4-2 Performance Specifications

Capacity / Performance	30 GB	60 GB	120 GB	240 GB	480 GB
Sequential Read (MB/s)	220	425	555	555	555
Sequential Write (MB/s)	125	260	490	505	515
4K Random Read (IOPS)	8,000	19,000	36,000	59,000	65,000
4K Random Write (IOPS)	18,000	57,000	69,000	70,000	69,000

Notes:
- Results may differ from various flash configurations or host system setting.
- Sequential read/write is based on CrystalDiskMark 8.0.4 with file size 1,000MB.
- Random read/write is measured using IOMeter with Queue Depth 32.

© 2024 Apacer Technology Inc.

4.3 Environmental Specifications

Environmental specifications of SV250-300 product are shown in Table 4-3.

Table 4-3 Environmental Specifications

Parameter	Type	Specifications
Temperature	Operating (Tc)	0°C to 70°C (Standard); -40°C to 85°C (Wide)
	Non-operating (Ta)	-55°C to 100°C
Vibration	Operating	7.69 GRMS, 20~2000 Hz/random (compliant with MIL-STD-810G)
	Non-operating	4.02 GRMS, 15~2000 Hz/random (compliant with MIL-STD-810G)
Shock	Operating	Acceleration, 50(G)/11(ms)/half sine (compliant with MIL-STD-202G)
	Non-operating	Acceleration, 1500(G)/0.5(ms)/half sine (compliant with MIL-STD-883K)

Notes:

- This Environmental Specification table indicates the conditions for testing the device. Real world usages may affect the results.
- Tc: case temperature; Ta: ambient temperature. The operating temperature is determined by the case temperature. Adequate airflow is advisable as it enables the device to maintain optimal temperatures, especially in environments with heavy workloads.

4.4 Mean Time Between Failures (MTBF)

Mean Time Between Failures (MTBF) is predicted based on reliability data for the individual components in SV250-300. The prediction result for SV250-300 is more than 3,000,000 hours.

Note: The MTBF is predicated and calculated based on “Telcordia Technologies Special Report, SR-332, Issue 3” method.

4.5 Certification and Compliance

SV250-300 complies with the following standards:

- CE
- UKCA
- FCC
- RoHS Recast
- MIL-STD-810G

© 2024 Apacer Technology Inc.

4.6 Endurance

The endurance of a storage device is predicted by Drive Writes Per Day based on several factors related to usage, such as the amount of data written into the drive, block management conditions, and daily workload for the drive. Thus, key factors, such as Write Amplifications and the number of P/E cycles, can influence the lifespan of the drive.

Table 4-4 Endurance Specifications

Capacity	Drive Writes Per Day
30 GB	2.18
60 GB	2.28
120 GB	2.21
240 GB	2.27
480 GB	2.28

Notes:

- This estimation complies with JEDEC JESD-219, Enterprise endurance workload of random data with payload size distribution.
- Flash vendor guaranteed 3D NAND TLC P/E cycles: 3K
- WAF may vary from capacity, flash configurations and writing behavior on each platform.
- 1 Terabyte = 1,024 GB
- DWPD (Drive Write Per Day) is calculated based on the number of times that user overwrites the entire capacity of an SSD per day of its lifetime during the warranty period. (3D NAND TLC warranty: 3 years)

4.7 LED Indicator Behavior

The behavior of the SV250-300 LED indicator is described in Table 4-5.

Table 4-5 LED Behavior

Location	LED	Description
LED A	HDDA1	LED blinks when the drive is being accessed

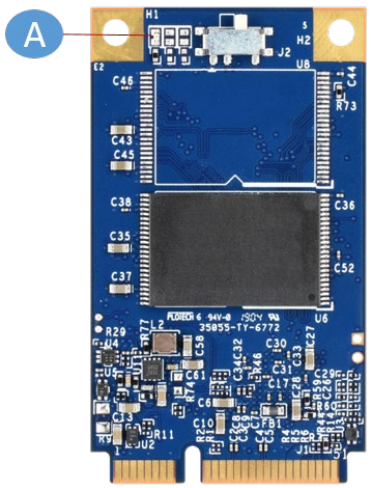

© 2024 Apacer Technology Inc.

5. Flash Management

5.1 Error Correction/Detection

SV250-300 implements a hardware ECC scheme, based on the Low Density Parity Check (LDPC). LDPC is a class of linear block error correcting code which has apparent coding gain over BCH code because LDPC code includes both hard decoding and soft decoding algorithms. With the error rate decreasing, LDPC can extend SSD endurance and increase data reliability while reading raw data inside a flash chip.

5.2 Bad Block Management

Current production technology is unable to guarantee total reliability of NAND flash memory array. When a flash memory device leaves factory, it comes with a minimal number of initial bad blocks during production or out-of-factory as there is no currently known technology that produce flash chips free of bad blocks. In addition, bad blocks may develop during program/erase cycles. Since bad blocks are inevitable, the solution is to keep them in control. Apacer flash devices are programmed with ECC, page mapping technique and S.M.A.R.T to reduce invalidity or error. Once bad blocks are detected, data in those blocks will be transferred to free blocks and error will be corrected by designated algorithms.

5.3 Global Wear Leveling

Flash memory devices differ from Hard Disk Drives (HDDs) in terms of how blocks are utilized. For HDDs, when a change is made to stored data, like erase or update, the controller mechanism on HDDs will perform overwrites on blocks. Unlike HDDs, flash blocks cannot be overwritten and each P/E cycle wears down the lifespan of blocks gradually. Repeatedly program/erase cycles performed on the same memory cells will eventually cause some blocks to age faster than others. This would bring flash storages to their end of service term sooner. Global wear leveling is an important mechanism that levels out the wearing of all blocks so that the wearing-down of all blocks can be almost evenly distributed. This will increase the lifespan of SSDs.

5.4 DataDefender™

Apacer's DataDefender is an advanced technology of power failure management which combines both firmware and hardware mechanisms to ensure data integrity. When power disruption occurs, the low voltage detector will be triggered. When this happens, the SSD's protection mechanism is activated and cuts off data transmission from the host. Once the power supply is resumed, the firmware protection mechanism will ensure the integrity of the firmware as well as the data already written into the NAND flash media.

5.5 ATA Secure Erase

ATA Secure Erase is an ATA disk purging command currently embedded in most of the storage drives. Defined in ATA specifications, (ATA) Secure Erase is part of Security Feature Set that allows storage drives to erase all user data areas. The erase process usually runs on the firmware level as most of the ATA-based storage media currently in the market are built-in with this command. ATA Secure Erase can securely wipe out the user data in the drive and protects it from malicious attack.

© 2024 Apacer Technology Inc.

5.6 TRIM

TRIM is a SATA command that helps improve the read/write performance and efficiency of solid-state drives (SSD). The command enables the host operating system to inform SSD controller which blocks contain invalid data, mostly because of the erase commands from host. The invalid will be discarded permanently and the SSD will retain more space for itself.

5.7 Flash Translation Layer – Page Mapping

Page mapping is an advanced flash management technology whose essence lies in the ability to gather data, distribute the data into flash pages automatically, and then schedule the data to be evenly written. Page-level mapping uses one page as the unit of mapping. The most important characteristic is that each logical page can be mapped to any physical page on the flash memory device. This mapping algorithm allows different sizes of data to be written to a block as if the data is written to a data pool and it does not need to take extra operations to process a write command. Thus, page mapping is adopted to increase random access speed and improve SSD lifespan, reduce block erase frequency, and achieve optimized performance and lifespan.

5.8 Device Sleep (DevSleep or DEVSLP) Mode

Device Sleep is a feature that allows SATA devices to enter a low power mode by designating a particular pin as DEVSLP signal with an aim to reducing power consumption.

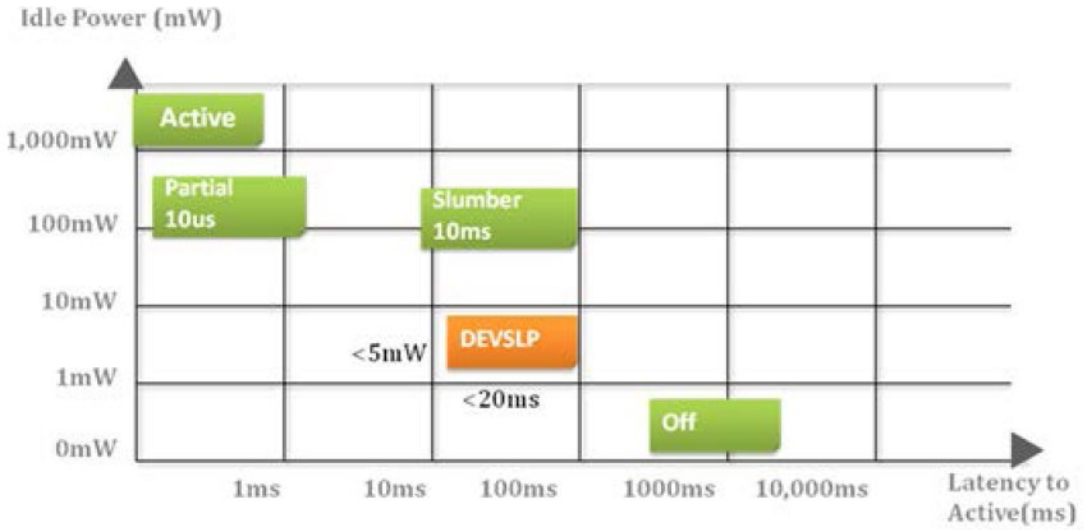

Figure 5-1 Device Sleep

5.9 Hyper Cache Technology

Apacer proprietary Hyper Cache technology uses a portion of the available capacity as SLC (1bit-per-cell) NAND flash memory, called Hyper cache mode. When data is written to SSD, the firmware will direct the data to Hyper Cache mode, providing excellent performance to handle various scenarios in industrial use.

© 2024 Apacer Technology Inc.

5.10 Over-provisioning

Over-provisioning (OP) is a certain portion of the SSD capacity exclusively for increasing Garbage Collection (GC) efficiency, especially when the SSD is filled to full capacity or performs a heavy mixed-random workload. OP has the advantages of providing extended life expectancy, reliable data integrity, and high sustained write performance.

5.11 SATA Power Management

By complying with SATA 6 Gb/s specifications, the SSD supports the following SATA power saving modes:

- ACTIVE: PHY ready, full power, TX & RX operational
- PARTIAL: Reduces power, resumes in under 10 µs (microseconds)
- SLUMBER: Reduces power, resumes in under 10 ms (milliseconds)
- HIPM: Host-Initiated Power Management
- DIPM: Device-Initiated Power Management
- AUTO-SLUMBER: Automatic transition from partial to slumber.
- Device Sleep (DevSleep or DEVSLP): PHY powered down; power consumption ≦ 5 mW; host assertion time ≦ 10 ms; exit timeout from this state ≦ 20 ms (unless specified otherwise in SATA Identify Device Log).

Note: The behaviors of power management features would depend on host/device settings.

5.12 DataRAID™

Apacer's DataRAID algorithm applies an additional level of protection and error-checking. Using this algorithm, a certain amount of space is given over to aggregating and resaving the existing parity data used for error checking. So, in the event that data becomes corrupted, the parity data can be compared to the existing uncorrupted data and the content of the corrupted data can be rebuilt.

5.13 SMART Read Refresh™

Apacer's SMART Read Refresh plays a proactive role in avoiding read disturb errors from occurring to ensure health status of all blocks of NAND flash. Developed for read-intensive applications in particular, SMART Read Refresh is employed to make sure that during read operations, when the read operation threshold is reached, the data is refreshed by re-writing it to a different block for subsequent use.

© 2024 Apacer Technology Inc.

6. Security and Reliability Features

6.1 Advanced Encryption Standard

Advanced Encryption Standard (AES) is a specification for the encryption of electronic data. AES has been adopted by the U.S. government since 2001 to protect classified information and is now widely implemented in embedded computing applications. The AES algorithm used in software and hardware is symmetric so that encrypting/decrypting requires the same encryption key. Without the key, the encrypted data is inaccessible to ensure information security.

Notably in flash memory applications, AES 256-bit hardware encryption is the mainstream to protect sensitive or confidential data. The hardware encryption provides better performance, reliability, and security than software encryption. It uses a dedicated processor, which is built inside the controller, to process the encryption and decryption. This enormously shortens the processing time and makes it efficient.

6.2 TCG Opal (optional)

Developed by the Trusted Computing Group (TCG), an organization whose members work together to formulate industry standards, Opal is a set of security specifications used for applying hardware-based encryption to storage devices.

Hardware encryption has many advantages. First of all, it transfers the computational load of the encryption process to dedicated processors, reducing the stress on the host system's CPU. In addition, storage devices complying with Opal specifications are self-encryption devices. Opal specifications also feature boot authentication. When the drive is being accessed, the shadow MBR will request the drive password at boot. The drive will only unlock and decrypt if the correct password is supplied. The other feature is LBA-specific permissions. Users are assigned different permissions for LBA ranges created by the device administrator. Each LBA range is password-protected and can only be accessed by users with the correct key to perform permitted actions (read/write/erase).

6.3 Write Protect (optional)

Apacer implements the Virtual Write scheme that allows write commands to go through the flash controller and data temporarily stored, but no data has been actually written into the flash. Once the system is reset and rebooted, the temporarily stored data will be lost and nowhere to be found in the system. Since the Virtual Write scheme runs at device level, it requires no software or driver installation and is independent from the host OS.

6.4 End-to-End Data Protection

End-to-End Data Protection is a feature implemented in Apacer SSD products that extends error control to cover the entire path from the host computer to the drive and back, and ensure data integrity at multiple points in the path to enable reliable delivery of data transfers. Unlike ECC which does not exhibit the ability to determine the occurrence of errors throughout the process of data transmission, End-to-End Data Protection allows SSD controller to identify an error created anywhere in the path and report the error to the host computer before it is written to the drive. This error-checking and error-reporting mechanism therefore guarantees the trustworthiness and reliability of the SSD.

© 2024 Apacer Technology Inc.

6.5 Thermal Sensor

Apacer Thermal Sensor is a digital temperature sensor with serial interface. By using a designated pin for transmission, storage device owners are able to read temperature data.

© 2024 Apacer Technology Inc.

7. Software Interface

7.1 Command Set

This section defines the software requirements and the format of the commands the host sends to SV250-300. Commands are issued to SV250-300 by loading the required registers in the command block with the supplied parameters, and then writing the command code to the Command register.

Table 7-1 Command Set

Code	Command	Code	Command
E5h	CHECK POWER MODE	F4h	SECURITY ERASE UNIT
06h	DATA SET MANAGEMENT	F5h	SECURITY FREEZE LOCK
92h	DOWNLOAD MICROCODE	F1h	SECURITY SET PASSWORD
90h	EXECUTE DEVICE DIAGNOSTIC	F2h	SECURITY UNLOCK
E7h	FLUSH CACHE	70h	SEEK
EAh	FLUSH CACHE EXT	EFh	SET FEATURES
ECh	IDENTIFY DEVICE	C6h	SET MULTIPLE MODE
E3h	IDLE	E6h	SLEEP
E1h	IDLE IMMEDIATE	B0h	SMART
91h	INITIALIZE DEVICE PARAMETERS	E2h	STANDBY
E4h	READ BUFFER	E0h	STANDBY IMMEDIATE
C8h	READ DMA	E8h	WRITE BUFFER
25h	READ DMA EXT	CAh	WRITE DMA
60h	READ FPDMA QUEUED	35h	WRITE DMA EXT
C4h	READ MULTIPLE	3Dh	WRITE DMA FUA EXT
29h	READ MULTIPLE EXT	61h	WRITE FPDMA QUEUED
2Fh	READ LOG EXT	3Fh	WRITE LOG EXT
47h	READ LOG DMA EXT	57h	WRITE LOG DMA EXT
20h	READ SECTOR	C5h	WRITE MULTIPLE
24h	READ SECTOR EXT	39h	WRITE MULTIPLE EXT
40h	READ VERIFY SECTORS	CEh	WRITE MULTIPLE FUA EXT
42h	READ VERIFY SECTORS EXT	30h	WRITE SECTOR
10h	RECALIBRATE	34h	WRITE SECTOR EXT
F6h	SECURITY DISABLE PASSWORD	45h	WRITE UNCORRECTABLE EXT
F3h	SECURITY ERASE PREPARE		

Table 7-2 Trusted Computing Feature Set

Code	Command	Code	Command
5Ch	TRUSTED RECEIVE	5Eh	TRUSTED SEND
5Dh	TRUSTED RECEIVE DMA	5Fh	TRUSTED SEND DMA

Note: This feature set is only applicable to products implemented with AES and Opal functions.

© 2024 Apacer Technology Inc.

7.2 S.M.A.R.T.

SMART, an acronym for Self-Monitoring, Analysis and Reporting Technology, is an open standard that allows a hard disk drive to automatically detect its health and report potential failures. When a failure is recorded by SMART, users can choose to replace the drive to prevent unexpected outage or data loss. Moreover, SMART can inform users of impending failures while there is still time to perform proactive actions, such as copy data to another device.

Table 7-3 SMART Subcommand Set

Code	SMART Subcommand
D0h	READ DATA
D1h	READ ATTRIBUTE THRESHOLDS
D2h	ENABLE/DISABLE ATTRIBUTE AUTOSAVE
D4h	EXECUTE OFF-LINE IMMEDIATE
D5h	SMART READ LOG
D6h	SMART WRITE LOG
D8h	ENABLE OPERATIONS
D9h	DISABLE OPERATIONS
DAh	RETURN STATUS

Table 7-4 General SMART Attribute Structure

Byte	Description
0	ID (Hex)
1 – 2	Status Flag
3	Value
4	Worst
5*-11	Raw Data

*Byte 5: LSB

Table 7-5 SMART Attribute ID List

ID (Hex)	Attribute Name
9 (0x09)	Power-on Hours
12 (0x0C)	Power Cycle Count
163 (0xA3)	Maximum Erase Count
164 (0xA4)	Average Erase Count
166 (0xA6)	Total Later Bad Block Count
167 (0xA7)	SSD Protect Mode (Vendor Specific)
168 (0xA8)	SATA PHY Error Count
171 (0xAB)	Program Fail Count
172 (0xAC)	Erase Fail Count
175 (0xAF)	Bad Cluster Table Count
192 (0xC0)	Unexpected Power Loss Count
194 (0xC2)	Temperature
231 (0xE7)	Lifetime Left
241 (0xF1)	Total Sectors of Write

© 2024 Apacer Technology Inc.

8. Electrical Specifications

8.1 Operating Voltage

Table 8-1 lists the supply voltage for SV250-300.

Table 8-1 Operating Range

Item	Range
Supply Voltage	3.3V ± 5% (3.135-3.465V)

8.2 Power Consumption

Table 8-2 lists the power consumption for SV250-300.

Table 8-2 Power Consumption

Capacity / Mode	Unit	30 GB	60 GB	120 GB	240 GB	480 GB
Active (Max.)	mA	240	325	320	345	380
Idle		65	75	50	50	50

Notes:
- All values are typical and may vary depending on flash configurations or host system settings.
- Power consumption is measured using CrystalDiskMark 8.0.4 with file size 1,000MB.

© 2024 Apacer Technology Inc.

9. Mechanical Specifications

9.1 Physical Information

Table 9-1 Physical Information

Parameter	Unit	30 GB	60 GB	120 GB	240 GB	480 GB
Length	mm	50.80 ± 0.15				
Width		29.85 ± 0.15				
Height (Max.)		4.85				
Weight	g ± 5%	5.44	6.06	7.08	6.88	7.17

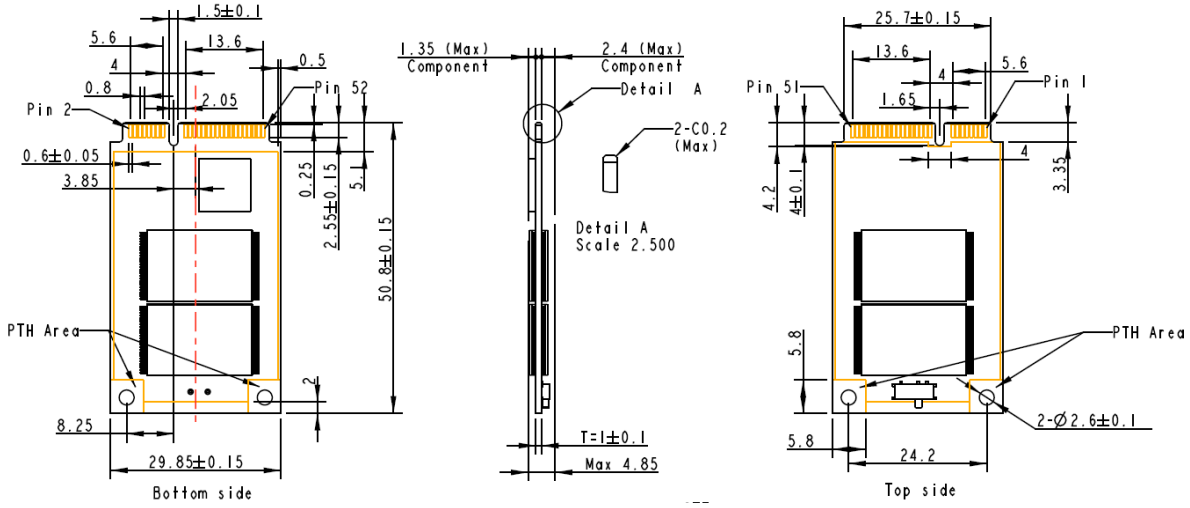

Figure 9-1 Physical Dimensions

9.2 Write Protect Switch (optional)

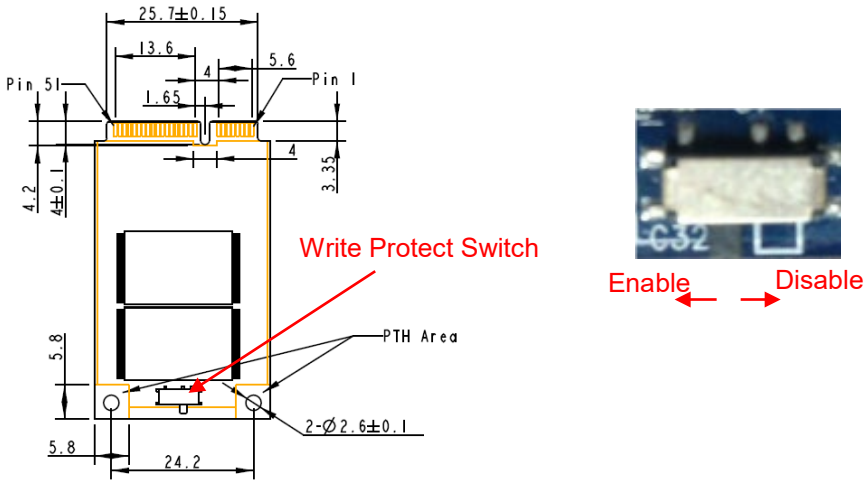

Figure 9-2 Write Protect Switch

© 2024 Apacer Technology Inc.

10. Product Ordering Information

10.1 Product Code Designations

Apacer's SV250-300 SSD is available in different configurations and densities. See the chart below for a comprehensive list of options for the SV250-300 series devices.

Code	1	2	3	4	5	6	7	8	9	10	11	12	13	14	15	16
	A	7	2	.	X	X	5	X	X	X	.	X	X	X	H	X

Code 1-3 (Product Line & Form Factor)	SATA + mSATA/MO300
Code 5-6 (Model/Solution)	25: SV250 A1: SV250 with TCG Opal
Code 7-8 (Product Capacity)	5F: 30GB 5G: 60GB 5H: 120GB 5J: 240GB 5K: 480GB
Code 9 (Flash Type & Product Temp)	G: 3D TLC Standard Temperature H: 3D TLC Wide Temperature
Code 10 (Product Spec)	A: MO300 B: MO300 with Write Protect switch
Code 12-14 (Version Number)	Random numbers generated by system
Code 15-16 (Firmware Version)	HA: Thermal Sensor with DEVSLP OP H6: Thermal Sensor with DEVSLP + TCG Opal OP

© 2024 Apacer Technology Inc.

10.2 Valid Combinations

The following tables list the available models of the SV250-300 series which are in mass production or will be in mass production. Consult your Apacer sales representative to confirm availability of valid combinations and to determine availability of new combinations.

10.2.1 Without TCG Opal/Without Write Protect Switch

Capacity	Standard Temperature	Wide Temperature
30GB	A72.255FGA.001HA	A72.255FHA.001HA
60GB	A72.255GGA.001HA	A72.255GHA.001HA
120GB	A72.255HGA.001HA	A72.255HHA.001HA
240GB	A72.255JGA.001HA	A72.255JHA.001HA
480GB	A72.255KGA.001HA	A72.255KHA.001HA

10.2.2 Without TCG Opal/With Write Protect Switch

Capacity	Standard Temperature	Wide Temperature
30GB	A72.255FGB.001HA	A72.255FHB.001HA
60GB	A72.255GGB.001HA	A72.255GHB.001HA
120GB	A72.255HGB.001HA	A72.255HHB.001HA
240GB	A72.255JGB.001HA	A72.255JHB.001HA
480GB	A72.255KGB.001HA	A72.255KHB.001HA

10.2.3 With TCG Opal

Capacity	Standard Temperature	Wide Temperature
30GB	A72.A15FGA.001H6	A72.A15FHA.001H6
60GB	A72.A15GGA.001H6	A72.A15GHA.001H6
120GB	A72.A15HGA.001H6	A72.A15HHA.001H6
240GB	A72.A15JGA.001H6	A72.A15JHA.001H6
480GB	A72.A15KGA.001H6	A72.A15KHA.001H6

© 2024 Apacer Technology Inc.

Revision History

Revision	Description	Date
1.0	Official release	4/29/2019
1.1	Changed Advanced Encryption Standard from optional to standard feature	5/2/2019
1.2	- Updated product photo on the cover page - Changed Write Protect from standard feature to optional feature - Updated 10. Product Ordering Information by adding “A” to code 10th	5/6/2019
1.3	Updated 3. Pin Assignments	5/20/2019
1.4	Updated 7.1 Command Set	10/24/2019
1.5	- Updated the note for DataRAID on Specifications Overview page - Modified mechanical dimensions of SV250-300 at 1. General Description - Updated 10. Product Ordering Information	12/16/2019
1.6	Modified total bytes at Table 4-1 Capacity Specifications	2/10/2020
1.7	Modified the model name appearing at 3. Pin Assignments	3/9/2020
1.8	- Changed SATA 6.0 Gbps to SATA 6 Gb/s in accordance with SATA naming guidelines - Capitalized every letter for commands at 7.1 Command Set and SMART subcommand at 7.2 S.M.A.R.T.	3/17/2020
1.9	- Updated compliance version with SATA Interface from 3.1 to 3.2 on Specifications Overview page - Updated the note regarding support model for DataRAID on Specifications Overview page - Updated Performance, MTBF, Endurance and Power Consumption on Specifications Overview page - Updated Table 4-1 by changing max LBA to total LBA - Updated 4.2 Performance and 8.2 Power Consumption - Updated 4.4 Mean Time Between Failures (MTBF) by changing from >1,000,000 hours to >3,000,000 hours and issue version from 2 to 3 - Updated 4.6 Endurance by changing endurance rating - Updated 4.7 LED Indicator Behavior by changing LED description - Updated the description of 5.2 Bad Block Management - Updated 10. Product Ordering Information by changing firmware code	6/30/2020

© 2024 Apacer Technology Inc.

Revision	Description	Date
2.0	- Updated storage temperature from -40°C -100°C to -55°C -100°C - Updated 3.1 Pin Assignments - Updated 10.1 Product Code Designations - Updated 10.2.3 Firmware version code	11/8/2021
2.1	- Updated endurance rating and warranty period at Endurance on Specifications Overview page and 4.6 Endurance - Updated pin description for Table 3-1 Pin Assignments	7/25/2022
2.2	- Updated Performance, Endurance, and Power Consumption on Specifications Overview page, Table 4-2, 4-4, and 8-2 - Added Tc and Ta to operating and storage temperature respectively on Specifications Overview page and Table 4-3 - Added UKCA to 4.5 Certification and Compliance - Updated the technology description of 7.2 S.M.A.R.T. - Updated 10. Product Ordering Information due to firmware change	7/4/2024

© 2024 Apacer Technology Inc.

Global Presence

Taiwan (Headquarters)
Apacer Technology Inc.
1F., No.32, Zhongcheng Rd., Tucheng Dist.,
New Taipei City 236, Taiwan R.O.C.
Tel: 886-2-2267-8000
Fax: 886-2-2267-2261
amtsales@apacer.com

U.S.A.
Apacer Memory America, Inc.
46732 Lakeview Blvd., Fremont, CA 94538
Tel: 1-408-518-8699
Fax: 1-510-249-9551
sa@apacerus.com

Japan
Apacer Technology Corp.
6F, Daiyontamachi Bldg., 2-17-12, Shibaura, Minato-Ku,
Tokyo, 108-0023, Japan
Tel: 81-3-5419-2668
Fax: 81-3-5419-0018
jpservices@apacer.com

Europe
Apacer Technology B.V.
Science Park Eindhoven 5051 5692 EB Son,
The Netherlands
Tel: 31-40-267-0000
Fax: 31-40-290-0686
sales@apacer.nl

China
Apacer Electronic (Shanghai) Co., Ltd
Room D, 22/FL, No.2, Lane 600, JieyunPlaza,
Tianshan RD, Shanghai, 200051, China
Tel: 86-21-6228-9939
Fax: 86-21-6228-9936
sales@apacer.com.cn

India
Apacer Technologies Pvt Ltd,
1874, South End C Cross, 9th Block Jayanagar,
Bangalore-560069, India
Tel: 91-80-4152-9061/62
Fax: 91-80-4170-0215
sales_india@apacer.com

© 2024 Apacer Technology Inc.