Apacer

RoHS Recast Compliant

SATA-Disk Module

SV250-7LP2 Product Specifications



April 25, 2019

Version 1.0

Apacer Technology Inc.
1F, No.32, Zhongcheng Rd., Tucheng Dist., New Taipei City, Taiwan, R.O.C
Tel: +886-2-2267-8000 Fax: +886-2-2267-2261
www.apacer.com

Apacer

Specifications Overview:

- **Compliance with SATA Interface**
  - Serial ATA Revision 3.1
  - SATA 6.0 Gbps
  - ATA-8 command set
  - Backward compatible with SATA 1.5/3.0 Gbps
- **Capacity**
  - 60, 120, 240 GB
- **Performance***
  - Burst read/write: 600 MB/sec
  - Sequential read: Up to 560 MB/sec
  - Sequential write: Up to 510 MB/sec
  - Random read (4K): Up to 54,000 IOPS
  - Random write (4K): Up to 75,000 IOPS
- **Flash Management**
  - Low-Density Parity-Check (LDPC) Code
  - Global Wear Leveling
  - Flash bad-block management
  - Flash Translation Layer: Page Mapping
  - S.M.A.R.T.
  - Power Failure Management
  - ATA Secure Erase
  - TRIM
  - Hyper Cache Technology
  - Over-Provisioning
  - DataRAID™
  - SMART Read Refresh™
- **Reliability**
  - Thermal Sensor
  - Thermal Management Technique (optional)
- **MTBF:** >1,000,000 hours
- **NAND Flash Type:** 3D TLC (BiCS3)
- **Endurance (in drive writes per day: DWPD)**
  - 60 GB: 3.21 DWPD
  - 120 GB: 3.4 DWPD
  - 240 GB: 3.54 DWPD
- **Temperature Range**
  - Operating:
    Standard: 0°C to 70°C
    Wide: -40°C to 85°C
  - Storage: -40°C to 100°C
- **Supply Voltage**
  - 5.0 V ± 5%
- **Power Consumption***
  - Active mode: 300 mA
  - Idle mode: 60 mA
- **Connector Type**
  - 7-pin SATA signal connector
  - Power segment options: 2 metal pins on each side of SATA connector or power cable connector
- **Form Factor**
  - SATA Disk Module: 7-pin/180 degree
  - Dimensions: 33.00 x 29.30 x 8.85, unit: mm
- **Power Supply Option: Multi-PowerPath Technology**
  - Cable type: +5V VCC from power cable
  - Cable-less type:
    - Pin 7: +5V VCC from the 7th pin
    - 7+2 Pin: +5V VCC from the 2 metal pins on both sides of the SATA connector
- **Security**
  - Trusted Computing Group (TCG) Opal 2.0 (optional)
  - AES 256-bit hardware encryption
  - End-to-End Data Protection
- **Shock & Vibration****
  - Shock: 1,500 G
  - Vibration: 15 G
- **LED Indicators for Drive Behavior**
- **Write Protect Switch (optional)**
- **RoHS Recast Compliant (Complies with 2011/65/EU Standard)**

*Varies from capacities. The values for performances and power consumptions presented are typical and may vary depending on flash configurations or platform settings. The term idle refers to the standby state of the device.
**Non-operating

© 2019 Apacer Technology Inc.

Table of Contents

1. General Descriptions 4

2. Functional Block 4

3. Pin Assignments 5

3.1 Multi-PowerPath Technology 5
3.2 Cable Type 5
3.3 Cable-Less Type 6

4. Product Specifications 7

4.1 Capacity 7
4.2 Performance 7
4.3 Environmental Specifications 7
4.4 Mean Time Between Failures (MTBF) 8
4.5 Certification and Compliance 8
4.6 Endurance 8
4.7 LED Indicator Behavior 9

5. Flash Management 10

5.1 Error Correction/Detection 10
5.2 Bad Block Management 10
5.3 Global Wear Leveling 10
5.4 Power Failure Management 10
5.5 Flash Translation Layer – 4K Mapping 10
5.6 ATA Secure Erase 11
5.7 TRIM 11
5.8 SATA Power Management 11
5.9 Hyper Cache Technology 11
5.10 Over-Provisioning 11
5.11 DataRAID™ 11
5.12 SMART Read Refresh™ 12

6. Security & Reliability Features 13

6.1 TCG Opal (optional) 13
6.2 Advanced Encryption Standard 13
6.3 End-to-End Data Protection 13
6.4 Thermal Sensor 13

© 2019 Apacer Technology Inc.

6.5 Thermal Management Technique (optional) 14

7. Software Interface 15

7.1 Command Set 15

7.2 S.M.A.R.T. 15

8. Electrical Specifications 17

8.1 Operating Voltage 17

8.2 Power Consumption 17

9. Physical Characteristics 18

9.1 Dimensions 18

9.2 Write Protect Switch (optional) 19

10. Product Ordering Information 20

10.1 Product Code Designations 20

10.2 Valid Combinations 21

© 2019 Apacer Technology Inc.

1. General Descriptions

Apacer SV250-7LP2 (SATA Disk Module 7Pin/180 Degree Low Profile 2) is a super-mini industrial SSD module, utilizing 3D NAND for higher capacity up to 240 GB and provides more power efficiency than 2D NAND. Designed in SATA 6.0 Gb/s interface, SV250-7LP2 can deliver outstanding performance up to 560 MB/s in reading and 510 MB/s in writing, highly suitable to serve as operating system boot drive or storage media of important data.

For data efficiency, the internal controlling unit of the product is engineered with a DRAM as a write cache for enhanced random performance and endurance. Besides, SV250-7LP2 features Apacer Multi-PowerPath technology that provides three methods to supply power to the host either via a conventional cable or cable-less design via pin7 or state-of-art 7+2 pin connector, which in turn offers developers maximum flexibility when it comes to board design.

Moreover, the device adopts the latest page mapping file translation layer and thermal throttling function, making it a powerful yet compact solution for space-limited design. Regarding reliability, SV250-7LP2 is implemented with LDPC (Low Density Parity Check) ECC engine to extend SSD endurance and increase data reliability while reading raw data inside a flash chip.

2. Functional Block

Apacer SV250-7LP2 includes a single-chip SATA 6.0 Gbps and the flash media. The controller integrates the flash management unit to support multi-channel, multi-bank flash arrays. Figure 2-1 shows the functional block diagram.

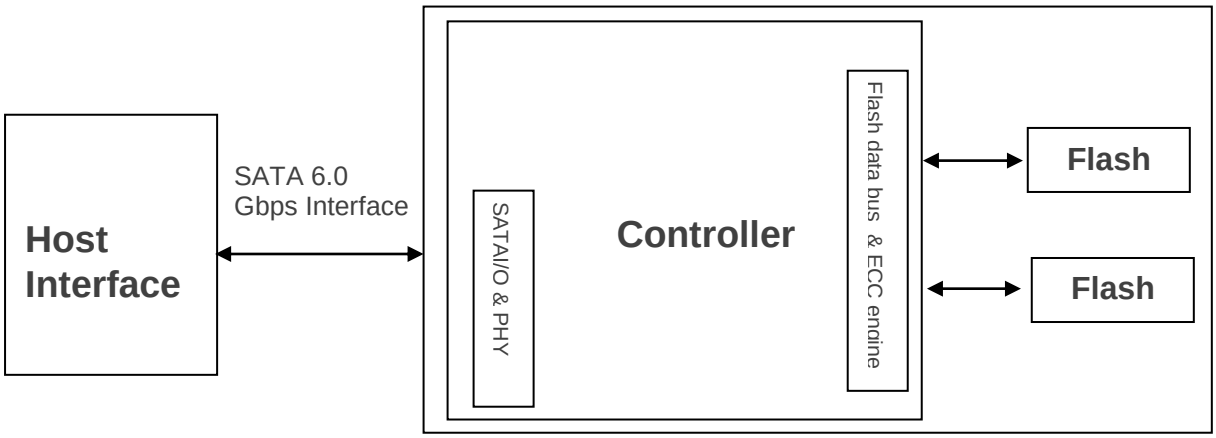

Figure 2-1 Block Diagram

© 2019 Apacer Technology Inc.

3. Pin Assignments

3.1 Multi-PowerPath Technology

Apacer's patented Multi-PowerPath technology provides a three-option plug-and-play solution for power supply. In addition to using a conventional power cable, power can also be supplied through state-of-art 7+2 pin connector on the side with cable-less design, allowing an SSD to operate without external power supply, giving it the dual advantages of signal integrity and flexible configuration on the motherboard. With the exclusive, innovative power circuit mechanism, Multi-PowerPath protects miniature SSD from being damaged by overheating even when power is concurrently supplied via the three methods.

3.2 Cable Type

+5V VCC from Power Cable

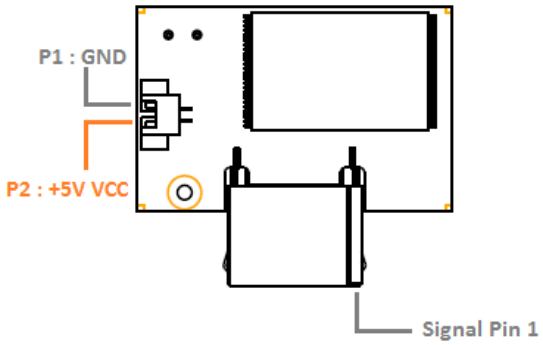

Table 3-1 Signal Segment

Pin	Type	Description
1	GND	Ground
2	A+	Differential Signal Pair A
3	A-	
4	GND	Ground
5	B-	Differential Signal Pair B
6	B+	
7	GND	Ground

Table 3-2 Power Segment

Pin	Type	Description
P1	GND	Ground
P2	**VCC**	**+5V VCC**

© 2019 Apacer Technology Inc.

3.3 Cable-Less Type

Pin 7: +5V VCC from the 7th pin

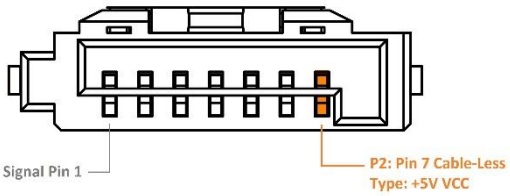

Table 3-3 Signal/Power Segment (Pin 7 Cable-less)

Pin	Type	Description
1	GND	Ground
2	A+	Differential Signal Pair A
3	A-	
4	GND	Ground
S5	B-	Differential Signal Pair B
S6	B+	
P2	VCC	+5V VCC

7+2 Pin: +5V VCC from the 2 metal pins on both sides of the SATA connector

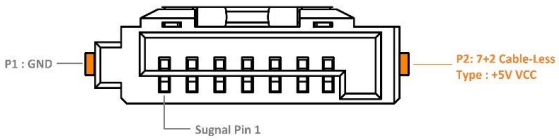

Table 3-4 Signal Segment

Pin	Type	Description
1	GND	Ground
2	A+	Differential Signal Pair A
3	A-	
4	GND	Ground
5	B-	Differential Signal Pair B
6	B+	
7	GND	Ground

Table 3-5 Power Segment (7+2 Cable-less)

Pin	Type	Description
P1	GND	Ground
P2	VCC	+5V VCC

© 2019 Apacer Technology Inc.

4. Product Specifications

4.1 Capacity

Capacity specifications of SV250-7LP2 are available as shown in Table 4-1. It lists the specific capacity and the default numbers of heads, sectors and cylinders for each product line.

Table 4-1 Capacity Specifications

Capacity	Total bytes*	Cylinders	Heads	Sectors	Max LBA
60 GB	60,021,538,816	16,383	16	63	117,231,408
120 GB	120,033,640,448	16,383	16	63	234,441,648
240 GB	240,057,409,536	16,383	16	63	468,862,128

*Display of total bytes varies from file systems, which means not all of the bytes can be used for storage.
**Notes: 1 GB = 1,000,000,000 bytes; 1 sector = 512 bytes.
LBA count addressed in the table above indicates total user storage capacity and will remain the same throughout the lifespan of the device. However, the total usable capacity of the SSD is most likely to be less than the total physical capacity because a small portion of the capacity is reserved for device maintenance usages.

4.2 Performance

Performance of SV250-7LP2 is listed below in Table 4-2.

Table 4-2 Performance Specifications

Capacity / Performance	60 GB	120 GB	240 GB
Sequential Read* (MB/s)	445	560	560
Sequential Write* (MB/s)	270	490	510
Random Read IOPS (4K)**	19,000	32,000	54,000
Random Write IOPS (4K)**	60,000	73,000	75,000

Note:
Results may differ from various flash configurations or host system setting.
*Sequential performance is based on CrystalDiskMark 5.2.1 with file size 1,000MB.
**Random performance measured using IOMeter with Queue Depth 32.

4.3 Environmental Specifications

Environmental specifications of SV250-7LP2 product are shown in Table 4-3.

Table 4-3 Environmental Specifications

Item	Specifications
Operating temp.	0°C to 70°C (Standard); -40°C to 85°C (Wide)
Non-operating temp.	-40°C to 100°C
Operating vibration	7.69 GRMS, 20~2000 Hz/random (compliant with MIL-STD-810G)
Non-operating vibration	4.02 GRMS, 15~2000 Hz/random (compliant with MIL-STD-810G)
Operating shock	50G, 11ms
Non-operating shock	1500G, 0.5ms (compliant with MIL-STD-883K)

Note: This Environmental Specification table indicates the conditions for testing the device. Real world usages may affect the results.

© 2019 Apacer Technology Inc.

4.4 Mean Time Between Failures (MTBF)

Mean Time Between Failures (MTBF) is predicted based on reliability data for the individual components in SV250-7LP2. The prediction result for SV250-7LP2 is more than 1,000,000 hours. Note: The MTBF is predicated and calculated based on “Telcordia Technologies Special Report, SR-332, Issue 2” method.

4.5 Certification and Compliance

SV250-7LP2 complies with the following standards:

- CE
- FCC
- RoHS Recast
- MIL-STD-810

4.6 Endurance

The endurance of a storage device is predicted by Drive Writes Per Day based on several factors related to usage, such as the amount of data written into the drive, block management conditions, and daily workload for the drive. Thus, key factors, such as Write Amplifications and the number of P/E cycles, can influence the lifespan of the drive.

Table 4-4 Drive Writes Per Day

Capacity	Drive Writes Per Day
60 GB	3.21
120 GB	3.4
240 GB	3.54

Note:

- This estimation complies with JESD-219A random enterprise workload.
- Flash vendor guaranteed 3D NAND TLC P/E cycle: 3K
- WAF may vary from capacity, flash configurations and writing behavior on each platform.
- 1 Terabyte = 1,024GB
- DWPD (Drive Writes Per Day) is calculated the number of times that user can overwrite the entire capacity of an SSD per day of its lifetime during the warranty period. (3D NAND TLC warranty: 2 years)

© 2019 Apacer Technology Inc.

4.7 LED Indicator Behavior

The behavior of the SV250-7LP2 LED indicators is described in Table 4-5.

Table 4-5 LED Behavior

Location	LED	Description
LED A	DAS	LED blinks when the drive is being accessed
LED B	Power	LED glows solidly when power is on

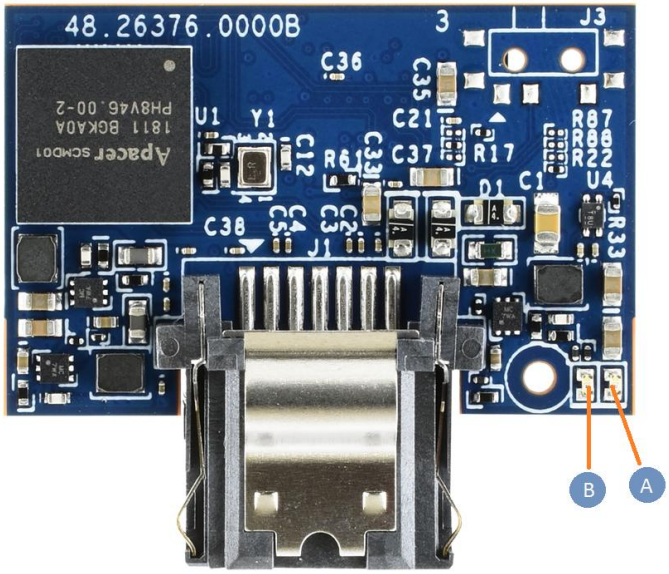

© 2019 Apacer Technology Inc.

5. Flash Management

5.1 Error Correction/Detection

SV250-7LP2 implements a hardware ECC scheme, based on the Low Density Parity Check (LDPC). LDPC is a class of linear block error correcting code which has apparent coding gain over BCH code because LDPC code includes both hard decoding and soft decoding algorithms. With the error rate decreasing, LDPC can extend SSD endurance and increase data reliability while reading raw data inside a flash chip.

5.2 Bad Block Management

Current production technology is unable to guarantee total reliability of NAND flash memory array. When a flash memory device leaves factory, it comes with a minimal number of initial bad blocks during production or out-of-factory as there is no currently known technology that produce flash chips free of bad blocks. In addition, bad blocks may develop during program/erase cycles. When host performs program/erase command on a block, bad block may appear in Status Register. Since bad blocks are inevitable, the solution is to keep them in control. Apacer flash devices are programmed with ECC, page mapping technique and S.M.A.R.T to reduce invalidity or error. Once bad blocks are detected, data in those blocks will be transferred to free blocks and error will be corrected by designated algorithms.

5.3 Global Wear Leveling

Flash memory devices differ from Hard Disk Drives (HDDs) in terms of how blocks are utilized. For HDDs, when a change is made to stored data, like erase or update, the controller mechanism on HDDs will perform overwrites on blocks. Unlike HDDs, flash blocks cannot be overwritten and each P/E cycle wears down the lifespan of blocks gradually. Repeatedly program/erase cycles performed on the same memory cells will eventually cause some blocks to age faster than others. This would bring flash storages to their end of service term sooner. Global wear leveling is an important mechanism that levels out the wearing of all blocks so that the wearing-down of all blocks can be almost evenly distributed. This will increase the lifespan of SSDs.

5.4 Power Failure Management

Power Failure Management plays a crucial role when experiencing unstable power supply. Power disruption may occur when users are storing data into the SSD. In this urgent situation, the controller would run multiple write-to-flash cycles to store the metadata for later block rebuilding. This urgent operation requires about several milliseconds to get it done. At the next power up, the firmware will perform a status tracking to retrieve the mapping table and resume previously programmed NAND blocks to check if there is any incompleteness of transmission.

5.5 Flash Translation Layer – 4K Mapping

4K mapping is a 4K-based firmware technology whose essence lies in the ability to gather data, distribute the data into 4KB blocks automatically, and then schedule the data to be evenly written. This implementation is also evidenced by JEDEC that 4KB is the most frequently used block size for data read/write access, constituting 67% of server workload. Thus, 4K mapping is adopted to increase random access speed and improve SSD lifespan, reduce block erase frequency, and achieve optimized performance and lifespan.

© 2019 Apacer Technology Inc.

5.6 ATA Secure Erase

ATA Secure Erase is an ATA disk purging command currently embedded in most of the storage drives. Defined in ATA specifications, (ATA) Secure Erase is part of Security Feature Set that allows storage drives to erase all user data areas. The erase process usually runs on the firmware level as most of the ATA-based storage media currently in the market are built-in with this command. ATA Secure Erase can securely wipe out the user data in the drive and protects it from malicious attack.

5.7 TRIM

TRIM is a SATA command that helps improve the read/write performance and efficiency of solid-state drives (SSD). The command enables the host operating system to inform SSD controller which blocks contain invalid data, mostly because of the erase commands from host. The invalid will be discarded permanently and the SSD will retain more space for itself.

5.8 SATA Power Management

By complying with SATA 6.0 Gb/s specifications, the SSD supports the following SATA power saving modes:

- ACTIVE: PHY ready, full power, Tx & Rx operational
- PARTIAL: Reduces power, resumes in under 10 µs (microseconds)
- SLUMBER: Reduces power, resumes in under 10 ms (milliseconds)
- HIPM: Host-Initiated Power Management
- DIPM: Device-Initiated Power Management
- AUTO-SLUMBER: Automatic transition from partial to slumber.

Note: The behaviors of power management features would depend on host/device settings.

5.9 Hyper Cache Technology

Apacer proprietary Hyper Cache technology uses a portion of the available capacity as SLC (1bit-per-cell) NAND flash memory, called Hyper cache mode. When data is written to SSD, the firmware will direct the data to Hyper Cache mode, providing excellent performance to handle various scenarios in industrial use.

5.10 Over-Provisioning

Over-Provisioning (OP) is a certain portion of the SSD capacity exclusively for increasing Garbage Collection (GC) efficiency, especially when the SSD is filled to full capacity or performs a heavy mixed-random workload. OP has the advantages of providing extended life expectancy, reliable data integrity, and high sustained write performance.

5.11 DataRAID™

Apacer's DataRAID algorithm applies an additional level of protection and error-checking. Using this algorithm, a certain amount of space is given over to aggregating and resaving the existing parity data used for error checking. So, in the event that data becomes corrupted, the parity data can be compared to the existing uncorrupted data and the content of the corrupted data can be rebuilt.

© 2019 Apacer Technology Inc.

5.12 SMART Read Refresh™

Apacer's SMART Read Refresh plays a proactive role in avoiding read disturb errors from occurring to ensure health status of all blocks of NAND flash. Developed for read-intensive applications in particular, SMART Read Refresh is employed to make sure that during read operations, when the read operation threshold is reached, the data is refreshed by re-writing it to a different block for subsequent use.

© 2019 Apacer Technology Inc.

6. Security & Reliability Features

6.1 TCG Opal (optional)

Developed by the Trusted Computing Group (TCG), an organization whose members work together to formulate industry standards, Opal is a set of security specifications used for applying hardware-based encryption to storage devices.

Hardware encryption has many advantages. First of all, it transfers the computational load of the encryption process to dedicated processors, reducing the stress on the host system's CPU. In addition, storage devices complying with Opal specifications are self-encryption devices. Opal specifications also feature boot authentication. When the drive is being accessed, the shadow MBR will request the drive password at boot. The drive will only unlock and decrypt if the correct password is supplied. The other feature is LBA-specific permissions. Users are assigned different permissions for LBA ranges created by the device administrator. Each LBA range is password-protected and can only be accessed by users with the correct key to perform permitted actions (read/write/erase).

6.2 Advanced Encryption Standard

Advanced Encryption Standard (AES) is a specification for the encryption of electronic data. AES has been adopted by the U.S. government since 2001 to protect classified information and is now widely implemented in embedded computing applications. The AES algorithm used in software and hardware is symmetric so that encrypting/decrypting requires the same encryption key. Without the key, the encrypted data is inaccessible to ensure information security.

Notably in flash memory applications, AES 256-bit hardware encryption is the mainstream to protect sensitive or confidential data. The hardware encryption provides better performance, reliability, and security than software encryption. It uses a dedicated processor, which is built inside the controller, to process the encryption and decryption. This enormously shortens the processing time and makes it efficient.

6.3 End-to-End Data Protection

End-to-End Data Protection is a feature implemented in Apacer SSD products that extends error control to cover the entire path from the host computer to the drive and back, and ensure data integrity at multiple points in the path to enable reliable delivery of data transfers. Unlike ECC which does not exhibit the ability to determine the occurrence of errors throughout the process of data transmission, End-to-End Data Protection allows SSD controller to identify an error created anywhere in the path and report the error to the host computer before it is written to the drive. This error-checking and error-reporting mechanism therefore guarantees the trustworthiness and reliability of the SSD.

6.4 Thermal Sensor

Apacer Thermal Sensor is a digital temperature sensor with serial interface. By using designated pins for transmission, storage device owners are able to read temperature data.

© 2019 Apacer Technology Inc.

6.5 Thermal Management Technique (optional)

Thermal management technique can monitor the temperature of the SSD equipped with a built-in thermal sensor via S.M.A.R.T. commands. This method can ensure the temperature of the device stays within temperature limits by drive throttling, i.e. reducing the speed of the drive when the device temperature reaches the threshold level, so as to prevent overheating, guarantee data reliability, and prolong product lifespan. When the temperature exceeds the maximum threshold level, thermal throttling will be triggered to reduce performance step by step to prevent hardware components from being damaged. Performance is only permitted to drop to the extent necessary for recovering a stable temperature to cool down the device's temperature. Once the temperature decreases to the minimum threshold value, transfer speeds will rise back to its optimum performance level.

© 2019 Apacer Technology Inc.

7. Software Interface

7.1 Command Set

Table 7-1 summarizes the ATA commands supported by SV250-7LP2.

Table 7-1 Command Set

Code	Command	Code	Command
E5h	Check Power Mode	F6h	Security Disable Password
90h	Execute Diagnostics	F3h	Security Erase Prepare
E7h	Flush Cache	F4h	Security Erase Unit
ECh	Identify Device	F5h	Security Freeze Lock
E3h	Idle	F1h	Security Set Password
E1h	Idle Immediate	F2h	Security Unlock
91h	Initialize Device Parameters	7Xh	Seek
C8h	Read DMA	EFh	Set Features
25h	Read DMA EXT	C6h	Set Multiple Mode
60h	Read FPDMA Queued	E6h	Sleep
47h	Read Log DMA EXT	B0h	S.M.A.R.T.
2Fh	Read Log EXT	E2h	Standby
C4h	Read Multiple	E0h	Standby Immediate
20 or 21h	Read Sector(s)	CAh	Write DMA
40 or 41h	Read Verify Sector(s)	35h	Write DMA EXT
10h	Recalibrate	61h	Write FPDMA Queued
57h	Write Log DMA EXT	3Fh	Write Log EXT
C5h	Write Multiple	30h or 31h	Write Sector(s)

7.2 S.M.A.R.T.

S.M.A.R.T. is an abbreviation for Self-Monitoring, Analysis and Reporting Technology, a self-monitoring system that provides indicators of drive health as well as potential disk problems. It serves as a warning for users from unscheduled downtime by monitoring and displaying critical drive information. Ideally, this should allow taking proactive actions to prevent drive failure and make use of S.M.A.R.T. information for future product development reference.

Apacer devices use the standard SMART command B0h to read data out from the drive to activate our S.M.A.R.T. feature that complies with the ATA/ATAPI specifications. S.M.A.R.T. Attribute IDs shall include initial bad block count, total later bad block count, maximum erase count, average erase count, power on hours and power cycle. When the S.M.A.R.T. Utility running on the host, it analyzes and reports the disk status to the host before the device reaches in critical condition.

Note: Attribute IDs may vary from product models due to various solution design and supporting capabilities.

© 2019 Apacer Technology Inc.

Apacer memory products come with S.M.A.R.T. commands and subcommands for users to obtain information of drive status and to predict potential drive failures. Users can take advantage of the following commands/subcommands to monitor the health of the drive.

Code	SMART Subcommand
D0h	READ DATA
D1h	READ ATTRIBUTE THRESHOLDS
D2h	Enable/Disable Attribute Autosave
D4h	Execute Off-line Immediate
D5h	Read Log (optional)
D6h	Write Log (optional)
D8h	Enable Operations
D9h	Disable operations
DAh	Return Status

General SMART attribute structure

Byte	Description
0	ID (Hex)
1 – 2	Status flag
3	Value
4	Worst
5*-11	Raw Data

*Byte 5: LSB

SMART attribute ID list

ID (Hex)	Attribute Name
9 (0x09)	Power-on hours
12 (0x0C)	Power cycle count
163 (0xA3)	Max. erase count
164 (0xA4)	Avg. erase count
166 (0xA6)	Total later bad block count
167 (0xA7)	SSD Protect Mode (vendor specific)
168 (0xA8)	SATA PHY Error Count
171 (0xAB)	Program fail count
172 (0xAC)	Erase fail count
175 (0xAF)	Bad Cluster Table Count
192 (0xC0)	Unexpected Power Loss Count
194 (0xC2)	Temperature
231 (0xE7)	Lifetime left
241 (0xF1)	Total sectors of write

© 2019 Apacer Technology Inc.

8. Electrical Specifications

8.1 Operating Voltage

Table 8-1 lists the supply voltage for SV250-7LP2.

Caution: **Absolute Maximum Stress Ratings –** Applied conditions greater than those listed under "Absolute Maximum Stress Ratings" may cause permanent damage to the device. This is a stress rating only and functional operation of the device at these conditions or conditions greater than those defined in the operational sections of this data sheet is not implied. Exposure to absolute maximum stress rating conditions may affect device reliability.

Table 8-1 Operating Range

Item	Range
Supply Voltage	5V ± 5% (4.75-5.25V)

8.2 Power Consumption

Table 8-2 lists the power consumption for SV250-7LP2.

Table 8-2 Power Consumption

Capacity / Mode	60 GB	120 GB	240 GB
Active (mA)	255	295	300
Idle (mA)	60	60	55

Note:
*All values are typical and may vary depending on flash configurations or host system settings.
**Active power is an average power measurement performed using CrystalDiskMark with 128KB sequential read/write transfers.

© 2019 Apacer Technology Inc.

9. Physical Characteristics

9.1 Dimensions

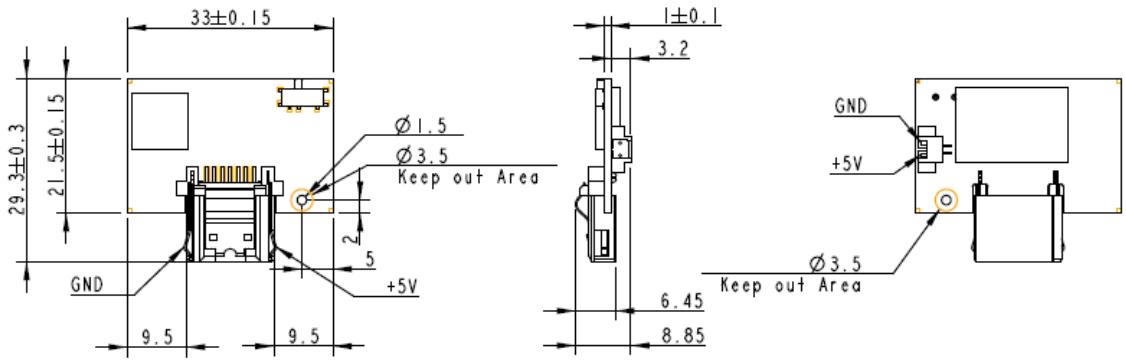

© 2019 Apacer Technology Inc.

9.2 Write Protect Switch (optional)

Apacer implements the Virtual Write scheme that allows write commands to go through the flash controller and data temporarily stored, but no data has been actually written into the flash. Once the system is reset and rebooted, the temporarily stored data will be lost and nowhere to be found in the system. Since the Virtual Write scheme runs at device level, it requires no software or driver installation and is independent from the host OS.

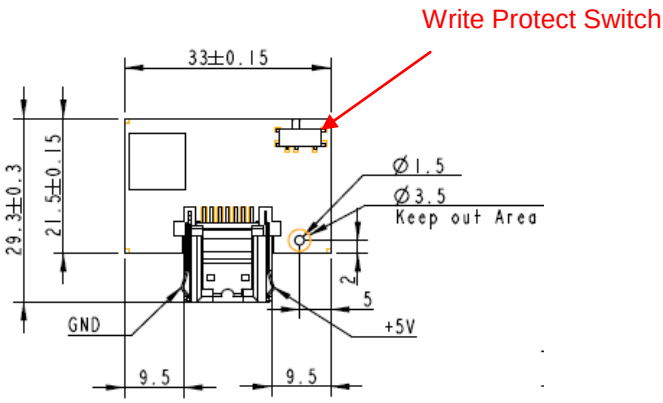

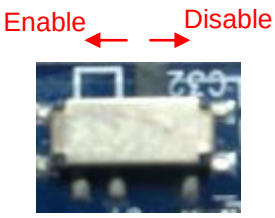

© 2019 Apacer Technology Inc.

10. Product Ordering Information

10.1 Product Code Designations

Code	1	2	3	4	5	6	7	8	9	10	11	12	13	14	15	16
	A	C	2	.	2	5	X	X	X	F	.	X	X	X	X	X

Code 1st ~ 3rd (Product Line & form factor)	SATA SDM7
Code 5th ~ 6th (Model/Solution)	SV250
Code 7th ~ 8th (Product Capacity)	5G: 60GB 5H: 120GB 5J: 240GB
Code 9th (Flash Type & Product Temp)	G: 3D TLC Standard temperature H: 3D TLC Wide temperature
Code 10th (Product Spec)	180D LP2 series without housing
Code 12th ~ 14th (Version Number)	Random numbers generated by system
Code 15th ~ 16th (Firmware Version)	03: Standard without DEVSLP 07: Thermal Throttling without DEVSLP

© 2019 Apacer Technology Inc.

10.2 Valid Combinations

10.2.1 Standard

Capacity	Standard Temperature	Wide Temperature
60GB	AC2.255GGF.00103	AC2.255GHF.00103
120GB	AC2.255HGF.00103	AC2.255HHF.00103
240GB	AC2.255JGF.00103	AC2.255JHF.00103

10.2.2 Thermal Throttling (optional)

Capacity	Standard Temperature	Wide Temperature
60GB	AC2.255GGF.00107	AC2.255GHF.00107
120GB	AC2.255HGF.00107	AC2.255HHF.00107
240GB	AC2.255JGF.00107	AC2.255JHF.00107

Note: Valid combinations are those products in mass production or will be in mass production. Consult your Apacer sales representative to confirm availability of valid combinations and to determine availability of new combinations.

© 2019 Apacer Technology Inc.

Revision History

Revision	Date	Description	Remark
0.1	3/26/2019	Preliminary release	
1.0	3/28/2019	- Removed DataDefender support - Changed power consumption value to TBD at Power Consumption on Specifications Overview page and 8.2 Power Consumption	
0.1	3/29/2019	- Updated the first note at 4.6 Endurance - Completed Power Consumption on Specifications Overview page and 8.2 Power Consumption - Updated 10. Product Ordering Information - Added Power Failure Management to Flash Management and Write Protect Switch on Specifications Overview page - Added 5.4 Power Failure Management - Added 9.2 Write Protect Switch	
0.2	4/3/2019	Updated 7.1 Command Set	
1.0	4/25/2019	- Completed endurance rating at Endurance on Specifications Overview page and 4.6 Endurance - Updated the first note for 4.6 Endurance to compliance with JESD-219A random enterprise workload	

© 2019 Apacer Technology Inc.

Global Presence

Taiwan (Headquarters)
Apacer Technology Inc.
1F., No.32, Zhongcheng Rd., Tucheng Dist.,
New Taipei City 236, Taiwan R.O.C.
Tel: 886-2-2267-8000
Fax: 886-2-2267-2261
amtsales@apacer.com

U.S.A.
Apacer Memory America, Inc.
46732 Lakeview Blvd., Fremont, CA 94538
Tel: 1-408-518-8699
Fax: 1-510-249-9551
sa@apacerus.com

Japan
Apacer Technology Corp.
6F, Daiyontamachi Bldg., 2-17-12, Shibaura, Minato-Ku,
Tokyo, 108-0023, Japan
Tel: 81-3-5419-2668
Fax: 81-3-5419-0018
jpservices@apacer.com

Europe
Apacer Technology B.V.
Science Park Eindhoven 5051 5692 EB Son,
The Netherlands
Tel: 31-40-267-0000
Fax: 31-40-290-0686
sales@apacer.nl

China
Apacer Electronic (Shanghai) Co., Ltd
Room D, 22/FL, No.2, Lane 600, JieyunPlaza,
Tianshan RD, Shanghai, 200051, China
Tel: 86-21-6228-9939
Fax: 86-21-6228-9936
sales@apacer.com.cn

India
Apacer Technologies Pvt Ltd,
1874, South End C Cross, 9th Block Jayanagar,
Bangalore-560069, India
Tel: 91-80-4152-9061/62
Fax: 91-80-4170-0215
sales_india@apacer.com

© 2019 Apacer Technology Inc.