RoHS Compliant

Serial ATA Flash Drive

***SM210-300 Product Specifications** (Toshiba 15nm)*

March 30, 2017

Version 1.4

Apacer
Access the best

Apacer Technology Inc.
1F, No.32, Zhongcheng Rd., Tucheng Dist., New Taipei City, Taiwan, R.O.C
Tel: +886-2-2267-8000 Fax: +886-2-2267-2261
www.apacer.com

Features:

- **Compliance with SATA Revision 3.1**
  - SATA 6.0 Gbps interface
  - Backward compatible with SATA 1.5 and 3.0 Gbps interfaces
  - ATA-8 command set
- **Capacity**
  - 8, 16, 32, 64, 128, 256, 512 GB
- **Performance***
  - Burst read/write: 600 MB/sec
  - Sustained read: up to 505 MB/sec
  - Sustained write: up to 360 MB/sec
  - Random read 4K: up to 83,000 IOPS
  - Random write 4K: up to 79,000 IOPS
- **Flash Management**
  - Built-in hardware ECC
  - Global Wear Leveling
  - Flash bad-block management
  - Flash Translation Layer: Page Mapping
  - S.M.A.R.T.
  - Power Failure Management
  - ATA Secure Erase
  - TRIM
- **NAND Flash Type:** MLC
- **MTBF:** >1,000,000 hours
- **Endurance (in Terabytes Written: TBW)**
  - 8 GB: 14 TBW
  - 16 GB: 27 TBW
  - 32 GB: 61 TBW
  - 64 GB: 129 TBW
  - 128 GB: 277 TBW
  - 256 GB: 587 TBW
  - 512 GB: 1,035 TBW
- **Temperature Range**
  - Operating:
    Standard: 0°C to 70°C
    Extended: -40°C to 85°C
  - Storage: -40°C to 100°C
- **Supply Voltage**
  - 3.3 V ± 5%
- **Power Consumption***
  - Active mode: 825 mA
  - Idle mode: 95 mA
- **Form Factor**
  - JEDEC MO-300
- **Shock & Vibration****
  - Shock: 1,500 G
  - Vibration: 15 G
- **DRAM Cache for Enhanced Random Performance**
- **SATA Power Management Modes**
- **Device Sleep Mode**
- **Write Protect Switch (optional)**
- **Thermal Sensor**
  - Standard temperature: Optional
  - Extended temperature: Default
- **LED Indicators for Drive Behavior**
- **RoHS Compliant**

*Varies from capacities. The values addressed here are typical and may vary depending on settings and platforms.
**Non-operating

©2017 Apacer Technology Inc.

Table of Contents

1. Product Description 3
1.1 Introduction 3
1.2 Capacity Specifications 3
1.3 Performance 3
1.4 Pin Assignments 4
1.5 LED Indicator Behavior 6
2. Software Interface 7
2.1 Command Set 7
2.2 S.M.A.R.T. 7
3. Flash Management 9
3.1 Error Correction/Detection 9
3.2 Bad Block Management 9
3.3 Global Wear Leveling 9
3.4 Power Failure Management 9
3.5 ATA Secure Erase 9
3.6 TRIM 10
3.7 Flash Translation Layer – Page Mapping 10
3.8 DEVSLP (DevSleep or DEVSLP) Mode 10
3.9 Thermal Sensor 10
3.10 SATA Power Management 11
4. Reliability Specifications 12
4.1 Environmental 12
4.2 Mean Time Between Failures (MTBF) 12
4.3 Certification and Compliance 12
4.4 Endurance 12
5. Electrical Characteristics 13
5.1 Operating Voltage 13
5.2 Power Consumption 13
6. Mechanical Specifications 14
6.1 Dimensions 14
6.2 Write Protect Switch (optional) 15
7. Product Ordering Information 16
7.1 Product Code Designations 16
7.2 Valid Combinations 17

©2017 Apacer Technology Inc.

1. Product Description

1.1 Introduction

Apacer SM210-300 is a well-balanced solid-state disk (SSD) drive with compact form factor (JEDEC MO-300) and great performance. Designed in SATA 6.0 Gbps interface, the mSATA SSD is able to deliver exceptional read/write speed, making it the ideal companion for heavy-loading embedded or server operations with space constraints for host computing systems. For data efficiency, the internal controlling unit of the mSATA SSD is engineered with DRAM for enhanced random performance. In regard of reliability, the drive comes with various implementations including powerful hardware ECC engine, power saving modes, wear leveling, flash block management, S.M.A.R.T., TRIM, and power failure management.

1.2 Capacity Specifications

Table 1-1 Capacity Specifications

Capacity	Total Bytes	Cylinders	Heads	Sectors	Max LBA
8 GB	8,012,390,400	15525	16	63	15,649,200
16 GB	16,013,942,784	16,383	16	63	31,277,232
32 GB	32,017,047,552	16,383	16	63	62,533,296
64 GB	64,023,257,088	16,383	16	63	125,045,424
128 GB	128,035,676,160	16,383	16	63	250,069,680
256 GB	256,060,514,304	16,383	16	63	500,118,192
512 GB	512,110,190,592	16,383	16	63	1,000,215,216

1. Display of total bytes varies from file systems.
2. Cylinders, heads or sectors are not applicable for these capacities. Only LBA addressing applies.
3. LBA count addressed in the table above indicates total user storage capacity and will remain the same throughout the lifespan of the device. However, the total usable capacity of the SSD is most likely to be less than the total physical capacity because a small portion of the capacity is reserved for device maintenance usages.

1.3 Performance

Table 1-2 Performance

Capacity / Performance	8 GB	16 GB	32 GB	64 GB	128 GB	256 GB	512 GB
Sustained Read (MB/s)	120	215	375	390	505	505	495
Sustained Write (MB/s)	25	50	100	90	175	345	360
Random Read IOPS (4K)	15,000	26,000	46,000	45,000	77,000	83,000	80,000
Random Write IOPS (4K)	4,000	10,000	24,000	22,000	43,000	79,000	69,000

Note: Performance varies from flash configurations or host system settings.
IOPS: measured on 8GB span (16777216 sectors Disk Size), 32 Outstanding I/Os (QD=32), Full Random Data pattern, 4KB Align I/Os and test durations 15minutes.

©2017 Apacer Technology Inc.

1.4 Pin Assignments

Pin assignment of the SM210-300 is shown in Figure 1-1 and described in Table 1-3.

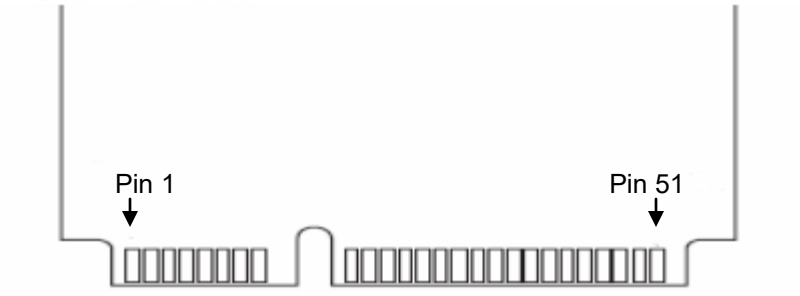

Figure 1-1 Pin Assignment

Table 1-3 Pin Assignment Description

Pin	Type	Description	Pin	Type	Description
1	Reserved	No Connect	27	GND	Ground
2	+3.3V	3.3V source	28	Reserved	No Connect
3	Reserved	No Connect	29	GND	Ground
4	GND	Ground	30	Reserved	No Connect
5	Reserved	No Connect	31	-A	Host Transmitter Differential Signal Pair
6	Reserved	No Connect	32	Reserved	No Connect
7	Reserved	No Connect	33	+A	Host Transmitter Differential Signal Pair
8	Reserved	No Connect	34	GND	Ground
9	GND	Ground	35	GND	Ground
10	Reserved	No Connect	36	Reserved	No Connect
11	Reserved	No Connect	37	GND	Ground
12	Reserved	No Connect	38	Reserved	No Connect
13	Reserved	No Connect	39	+3.3V	3.3V source
14	Reserved	No Connect	40	GND	Ground
15	GND	Ground	41	+3.3V	3.3V source
16	Reserved	No Connect	42	Reserved	No Connect
17	Reserved	No Connect	43	Device Type	No Connect
18	GND	Ground	44	DEVSLP	Device Sleep
19	Reserved	No Connect	45	Reserved	No Connect
20	Reserved	No Connect	46	Reserved	No Connect
21	GND	Ground	47	Reserved	No Connect
22	Reserved	No Connect	48	Reserved	No Connect
23	+B	Host Receiver Differential Signal Pair	49	DAS/DSS	Device Activity Signal/Disable Staggered Spin-up
24	+3.3V	3.3V Source	50	GND	Ground
25	-B	Host Receiver Differential Signal Pair	51*	Detect	0 ohm
26	GND	Ground	52	+3.3V	3.3V source

*Notes about Pin51: It is a presence detection pin that shall be connected to GND by a 0 ohm to 220 ohm Resistor on device. Please see the diagram below.

©2017 Apacer Technology Inc.

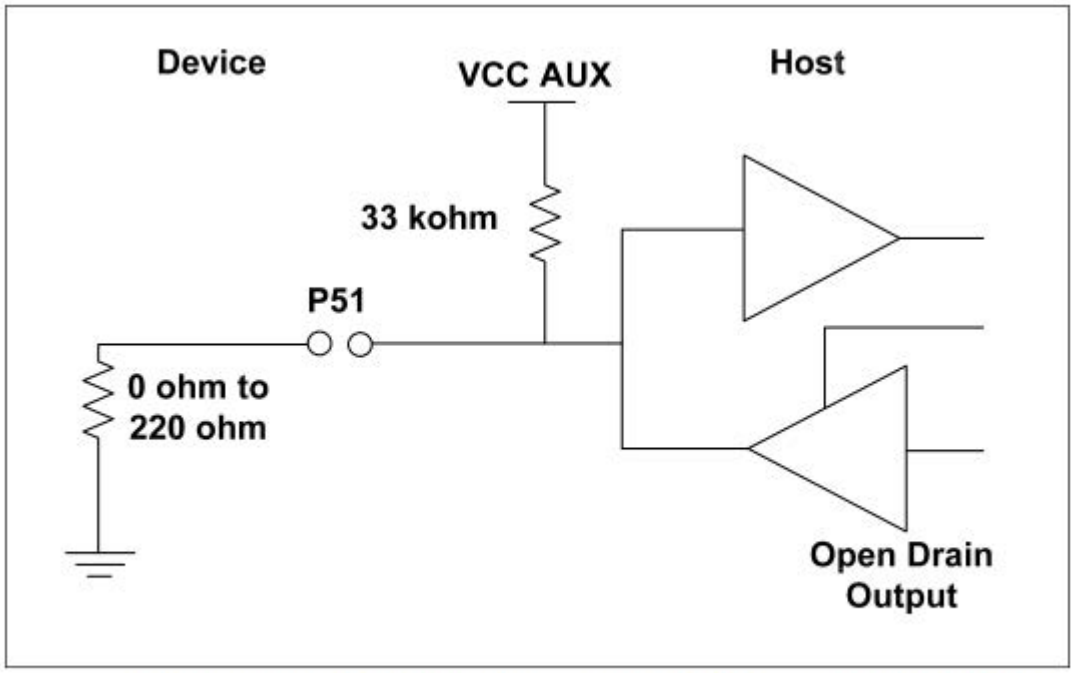

Bi-directional host-side implementation of P51 for compatibility with non-mSATA devices (informative)

©2017 Apacer Technology Inc.

1.5 LED Indicator Behavior

The behavior of the SS210-300 LED indicators is described in Table 1-4.

Table 1-4 LED Behavior

Location	Status	Description
LED A	Blinking	Accessing drive
	Static	Write Protect is enabled (only available for models supporting write protection)
LED B	Static	PHY is connected

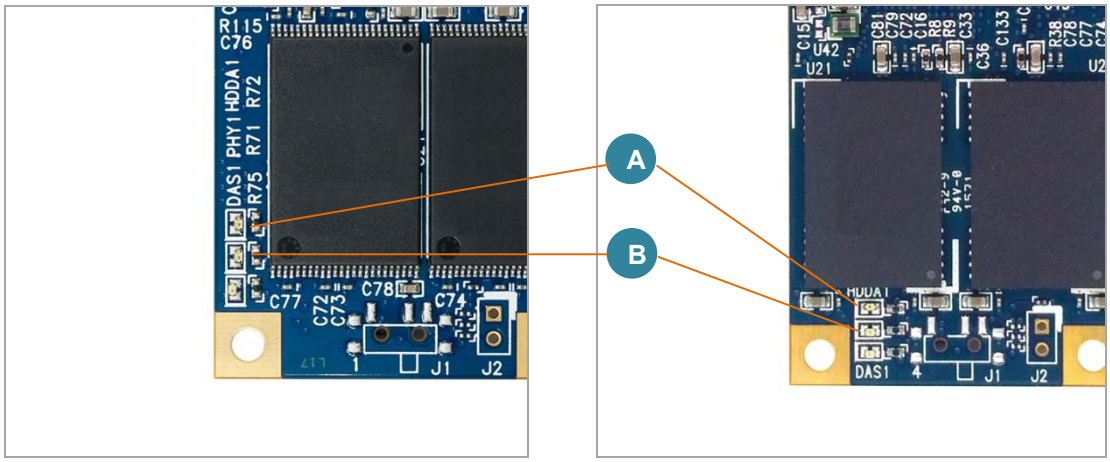

8-256GB **512GB**

©2017 Apacer Technology Inc.

2. Software Interface

2.1 Command Set

Table 2-1 summarizes the ATA commands supported by SM210-300.

Table 2-1 Command Set

Code	Command	Code	Command
E5h	Check Power Mode	F6h	Security Disable Password
90h	Execute Diagnostics	F3h	Security Erase Prepare
E7h	Flush Cache	F4h	Security Erase Unit
ECh	Identify Device	F5h	Security Freeze Lock
E3h	Idle	F1h	Security Set Password
E1h	Idle Immediate	F2h	Security Unlock
91h	Initialize Device Parameters	7Xh	Seek
C8h	Read DMA	EFh	Set Features
25h	Read DMA EXT	C6h	Set Multiple Mode
60h	Read FPDMA Queued	E6h	Sleep
47h	Read Log DMA EXT	B0h	S.M.A.R.T.
2Fh	Read Log EXT	E2h	Standby
C4h	Read Multiple	E0h	Standby Immediate
20 or 21h	Read Sector(s)	CAh	Write DMA
40 or 41h	Read Verify Sector(s)	35h	Write DMA EXT
10h	Recalibrate	61h	Write FPDMA Queued
57h	Write Log DMA EXT	3Fh	Write Log EXT
C5h	Write Multiple	30h or 31h	Write Sector(s)

2.2 S.M.A.R.T.

S.M.A.R.T. is an abbreviation for Self-Monitoring, Analysis and Reporting Technology, a self-monitoring system that provides indicators of drive health as well as potential disk problems. It serves as a warning for users from unscheduled downtime by monitoring and displaying critical drive information. Ideally, this should allow taking proactive actions to prevent drive failure and make use of S.M.A.R.T. information for future product development reference.

Apacer devices use the standard SMART command B0h to read data out from the drive to activate our S.M.A.R.T. feature that complies with the ATA/ATAPI specifications. S.M.A.R.T. Attribute IDs shall include initial bad block count, total later bad block count, maximum erase count, average erase count, power on hours and power cycle. When the S.M.A.R.T. Utility running on the host, it analyzes and reports the disk status to the host before the device reaches in critical condition.

Note: Attribute IDs may vary from product models due to various solution design and supporting capabilities.

©2017 Apacer Technology Inc.

Apacer memory products come with S.M.A.R.T. commands and subcommands for users to obtain information of drive status and to predict potential drive failures. Users can take advantage of the following commands/subcommands to monitor the health of the drive.

Code	SMART Subcommand
D0h	READ DATA
D1h	READ ATTRIBUTE THRESHOLDS
D2h	Enable/Disable Attribute Autosave
D4h	Execute Off-line Immediate
D5h	Read Log (optional)
D6h	Write Log (optional)
D8h	Enable Operations
D9h	Disable operations
DAh	Return Status

General SMART attribute structure

Byte	Description
0	ID (Hex)
1 – 2	Status flag
3	Value
4	Worst
5*-11	Raw Data

*Byte 5: LSB

SMART attribute ID list

ID (Hex)	Attribute Name
9 (0x09)	Power-on hours
12 (0x0C)	Power cycle count
163 (0xA3)	Max. erase count
164 (0xA4)	Avg. erase count
166 (0xA6)	Total later bad block count
167 (0xA7)	SSD Protect Mode (vendor specific)
168 (0xA8)	SATA PHY Error Count
175 (0xAF)	Bad Cluster Table Count
192 (0xC0)	Unexpected Power Loss Count
194 (0xC2)	Temperature
241 (0xF1)	Total sectors of write

©2017 Apacer Technology Inc.

3. Flash Management

3.1 Error Correction/Detection

SM210-300 implements a hardware ECC scheme, based on the BCH algorithm. It can detect and correct up to 40 bits error in 1K bytes.

3.2 Bad Block Management

Current production technology is unable to guarantee total reliability of NAND flash memory array. When a flash memory device leaves factory, it comes with a minimal number of initial bad blocks during production or out-of-factory as there is no currently known technology that produce flash chips free of bad blocks. In addition, bad blocks may develop during program/erase cycles. When host performs program/erase command on a block, bad block may appear in Status Register. Since bad blocks are inevitable, the solution is to keep them in control. Apacer flash devices are programmed with ECC, block mapping technique and S.M.A.R.T to reduce invalidity or error. Once bad blocks are detected, data in those blocks will be transferred to free blocks and error will be corrected by designated algorithms.

3.3 Global Wear Leveling

Flash memory devices differ from Hard Disk Drives (HDDs) in terms of how blocks are utilized. For HDDs, when a change is made to stored data, like erase or update, the controller mechanism on HDDs will perform overwrites on blocks. Unlike HDDs, flash blocks cannot be overwritten and each P/E cycle wears down the lifespan of blocks gradually. Repeatedly program/erase cycles performed on the same memory cells will eventually cause some blocks to age faster than others. This would bring flash storages to their end of service term sooner. Global wear leveling is an important mechanism that levels out the wearing of all blocks so that the wearing-down of all blocks can be almost evenly distributed. This will increase the lifespan of SSDs.

3.4 Power Failure Management

Power Failure Management plays a crucial role when experiencing unstable power supply. Power disruption may occur when users are storing data into the SSD. In this urgent situation, the controller would run multiple write-to-flash cycles to store the metadata for later block rebuilding. This urgent operation requires about several milliseconds to get it done. At the next power up, the firmware will perform a status tracking to retrieve the mapping table and resume previously programmed NAND blocks to check if there is any incompleteness of transmission.

Note: The controller unit of this product model is designed with a DRAM as a write cache for improved performance and data efficiency. Though unlikely to happen in most cases, the data cached in the volatile DRAM might be potentially affected if a sudden power loss takes place before the cached data is flushed into non-volatile NAND flash memory.

3.5 ATA Secure Erase

ATA Secure Erase is an ATA disk purging command currently embedded in most of the storage drives. Defined in ATA specifications, (ATA) Secure Erase is part of Security Feature Set that allows storage drives to erase all user data areas. The erase process usually runs on the firmware level as most of the ATA-based storage media currently in the market are built-in with this command. ATA Secure Erase can securely wipe out the user data in the drive and protects it from malicious attack.

©2017 Apacer Technology Inc.

3.6 TRIM

TRIM is a SATA command that helps improve the read/write performance and efficiency of solid-state drives (SSD). The command enables the host operating system to inform SSD controller which blocks contain invalid data, mostly because of the erase commands from host. The invalid will be discarded permanently and the SSD will retain more space for itself.

3.7 Flash Translation Layer – Page Mapping

Page mapping is an advanced flash management technology whose essence lies in the ability to gather data, distribute the data into flash pages automatically, and then schedule the data to be evenly written. Page-level mapping uses one page as the unit of mapping. The most important characteristic is that each logical page can be mapped to any physical page on the flash memory device. This mapping algorithm allows different sizes of data to be written to a block as if the data is written to a data pool and it does not need to take extra operations to process a write command. Thus, page mapping is adopted to increase random access speed and improve SSD lifespan, reduce block erase frequency, and achieve optimized performance and lifespan.

3.8 DEVSLP (DevSleep or DEVSLP) Mode

Device Sleep is a feature that allows SATA devices to enter a low power mode by designating pin 44 as DEVSLP signal with an aim to reducing power consumption.

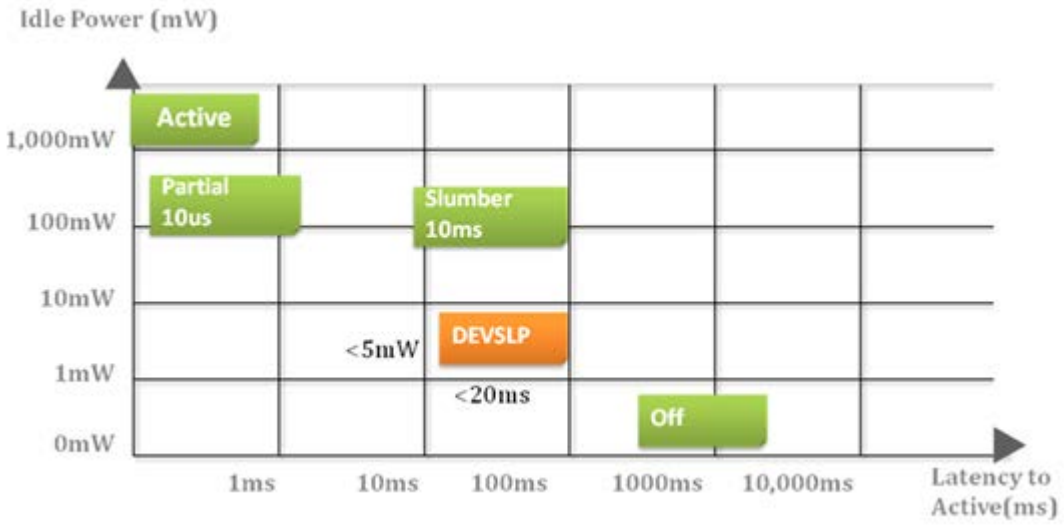

3.9 Thermal Sensor

Apacer Thermal Sensor is a digital temperature sensor with serial interface. By using designated pins for transmission, storage device owners are able to read temperature data.

©2017 Apacer Technology Inc.

3.10 SATA Power Management

By complying with SATA 6.0 Gb/s specifications, the SSD supports the following SATA power saving modes:

- ACTIVE: PHY ready, full power, Tx & Rx operational
- PARTIAL: Reduces power, resumes in under 10 µs (microseconds)
- SLUMBER: Reduces power, resumes in under 10 ms (milliseconds)
- HIPM: Host-Initiated Power Management
- DIPM: Device-Initiated Power Management
- AUTO-SLUMBER: Automatic transition from partial to slumber.
- Device Sleep (DevSleep or DEVSLP): PHY powered down; power consumption ≦ 5 mW; host assertion time ≦ 10 ms; exit timeout from this state ≦ 20 ms (unless specified otherwise in SATA Identify Device Log).

Note: The behaviors of power management features would depend on host/device settings.

©2017 Apacer Technology Inc.

4. Reliability Specifications

4.1 Environmental

SM210-300 environmental specifications follow MIL-STD-810F, as indicated in the following table.

Table 4-1 Environmental Specifications

Environment	Specifications
Temperature	0℃ to 70℃ (Standard); -40°C to 85°C (Extended)
	-40°C to 100°C (Non-operating)
Vibration	Non-operating: Sine wave, 15(G), 10~2000(Hz), Operating: Random, 7.69(Grms), 20~2000(Hz)
Shock	Non-operating: Acceleration, 1,500 G, 0.5 ms Operating: Peak acceleration, 50 G, 11 ms

4.2 Mean Time Between Failures (MTBF)

Mean Time Between Failures (MTBF) is predicted based on reliability data for the individual components in SATA drive. The prediction result for the SM210-300 is more than 1,000,000 hours.

Note: the MTBF is predicated and calculated based on “Telcordia Technologies Special Report, SR-332, Issue 2” method.

4.3 Certification and Compliance

SM210-300 complies with the following standards:

- CE
- FCC
- RoHS
- MIL-STD-810F

4.4 Endurance

The endurance of a storage device is predicted by TeraBytes Written based on several factors related to usage, such as the amount of data written into the drive, block management conditions, and daily workload for the drive. Thus, key factors, such as Write Amplifications and the number of P/E cycles, can influence the lifespan of the drive.

Capacity	TeraBytes Written
8 GB	14
16 GB	27
32 GB	61
64 GB	129
128 GB	277
256 GB	587
512 GB	1,035

Note:

- The measurement assumes the data written to the SSD for test is under a typical and constant rate.
- The measurement follows the standard metric: 1 TB (Terabyte) = 1,000 GB.
- The estimated values are based on JEDEC Enterprise endurance workload comprised of random data with the payload size distribution with sequential write behavior.

©2017 Apacer Technology Inc.

5. Electrical Characteristics

5.1 Operating Voltage

Table 5-1 lists the supply voltage for SM210-300.

Table 5-1 Operating Voltage

Parameter	Conditions
Supply Voltage	3.3V ± 5%

5.2 Power Consumption

Table 5-2 lists the power consumption for SM210-300.

Table 5-2 Typical Power Consumption

Capacity / Modes	8 GB	16 GB	32 GB	64 GB	128 GB	256 GB	512 GB
Active (mA)	235	270	320	335	460	710	825
Idle (mA)	90	90	90	95	95	95	80

Note: Results may differ from various flash configurations or host system setting.

©2017 Apacer Technology Inc.

6. Mechanical Specifications

6.1 Dimensions

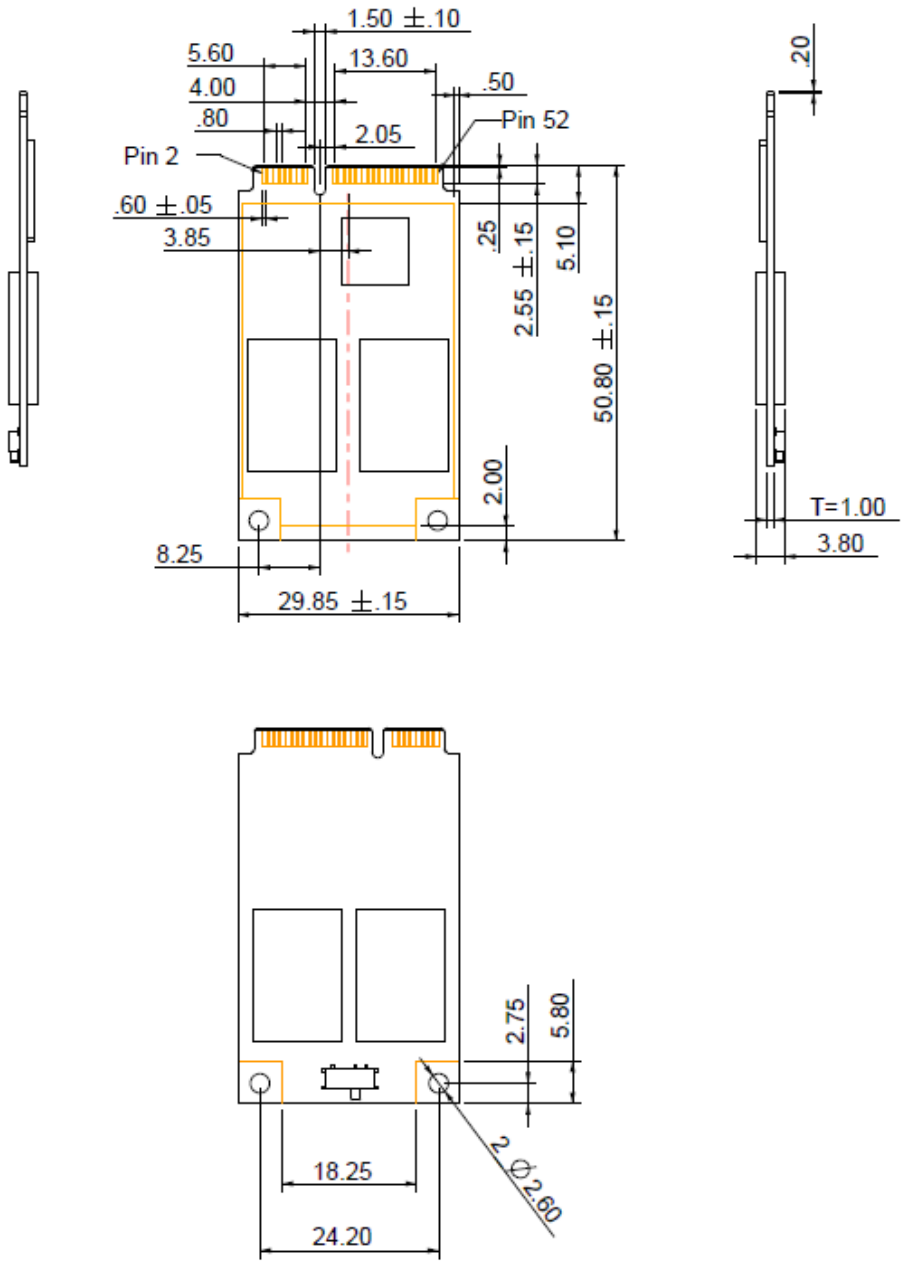

Unit: mm
Tolerance: ± 0.2

©2017 Apacer Technology Inc.

6.2 Write Protect Switch (optional)

Apacer implements the Virtual Write scheme that allows write commands to go through the flash controller and data temporarily stored, but no data has been actually written into the flash. Once the system is reset and rebooted, the temporarily stored data will be lost and nowhere to be found in the system. Since the Virtual Write scheme runs at device level, it requires no software or driver installation and is independent from the host OS.

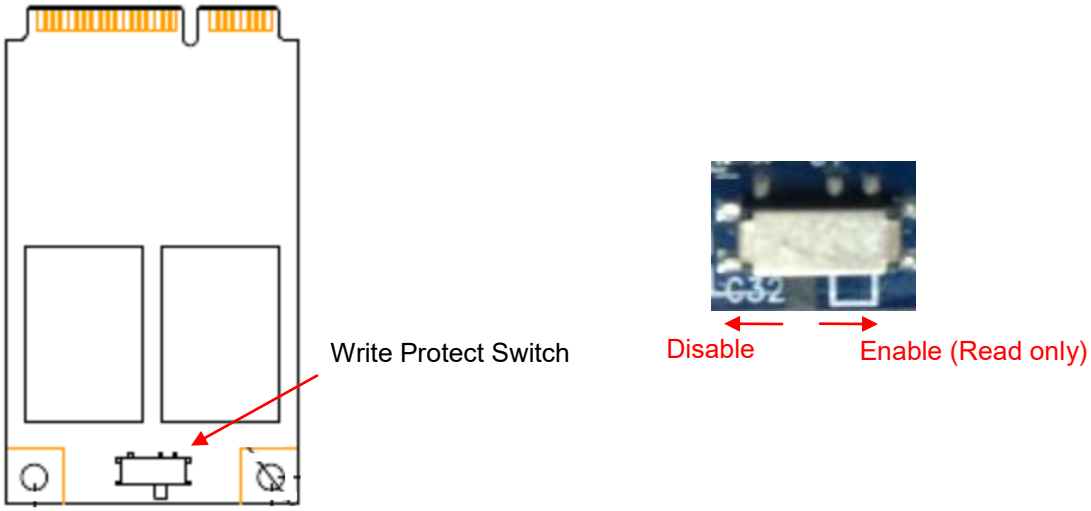

Note: Write Protect is optional and the image is for reference only.

©2017 Apacer Technology Inc.

7. Product Ordering Information

7.1 Product Code Designations

A P M xxxG M F XX – XX TM1X X

Operating Temp. Range
Blank: 0℃ to 70℃
W: -40℃ to 85℃

Flash Type

Version Control

Add-On Value
AN = Default
FN = Thermal Sensor
CN = Write Protect
QN = Write Protect + Thermal Sensor

Solution Version

Form Factor
M = JEDEC MO-300

Capacity
008G = 08GB
016G = 16GB
032G = 32GB
064G = 64GB
128G = 128GB
256G = 256GB
512G = 512GB

SATA Disk Module

Apacer Product Code

©2017 Apacer Technology Inc.

7.2 Valid Combinations*

7.2.1 Default

Capacity	Standard Temperature	Extended Temperature**
8GB	APM008GMFAN-4BTM1	APM008GMFFN-4BTM1W
16GB	APM016GMFAN-4BTM1	APM016GMFFN-4BTM1W
32GB	APM032GMFAN-4BTM1	APM032GMFFN-4BTM1W
64GB	APM064GMFAN-4BTM1	APM064GMFFN-4BTM1W
128GB	APM128GMFAN-4BTM1G	APM128GMFFN-4BTM1GW
256GB	APM256GMFAN-4BTM1G	APM256GMFFN-4BTM1GW
512GB	APM512GMFAN-4BTM1G	APM512GMFFN-4BTM1GW

7.2.2 With Write Protect (optional)

Capacity	Standard Temperature	Extended Temperature**
8GB	APM008GMFCN-4BTM1	APM008GMFQN-4BTM1W
16GB	APM016GMFCN-4BTM1	APM016GMFQN-4BTM1W
32GB	APM032GMFCN-4BTM1	APM032GMFQN-4BTM1W
64GB	APM064GMFCN-4BTM1	APM064GMFQN-4BTM1W
128GB	APM128GMFCN-4BTM1G	APM128GMFQN-4BTM1GW
256GB	APM256GMFCN-4BTM1G	APM256GMFQN-4BTM1GW
512GB	APM512GMFCN-4BTM1G	APM512GMFQN-4BTM1GW

7.2.3 With Thermal Sensor (optional)

Capacity	Standard Temperature
8GB	APM008GMFFN-4BTM1
16GB	APM016GMFFN-4BTM1
32GB	APM032GMFFN-4BTM1
64GB	APM064GMFFN-4BTM1
128GB	APM128GMFFN-4BTM1G
256GB	APM256GMFFN-4BTM1G
512GB	APM512GMFFN-4BTM1G

Note:
***Valid combinations are those products in mass production or will be in mass production. Consult your Apacer sales representative to confirm availability of valid combinations and to determine availability of new combinations.
**With built-in thermal sensor.

©2017 Apacer Technology Inc.

Revision History

Revision	Description	Date
0.1	Preliminary release	4/26/2016
0.2	- Updated performance, endurance, and power consumption values for 512GB - Revised product ordering information	5/17/2016
0.3	Revised product ordering information for the standard models with extended temperature support	5/19/2016
0.4	Revised product ordering information	6/22/2016
0.5	Revised product ordering information	6/23/2016
0.6	- Revised endurance rating for 512GB - Added flash management descriptions for page mapping and DEVSLP	7/26/2016
1.0	Updated endurance ratings	8/31/2016
1.1	Added 1.5 LED Indicator Behavior	11/30/2016
1.2	Updated product ordering information	2/20/2017
1.3	Changed 7.2.1 title from Standard to Default	2/23/2017
1.4	Updated product ordering information	3/30/2017

©2017 Apacer Technology Inc.

Global Presence

Taiwan (Headquarters)

Apacer Technology Inc.
1F., No.32, Zhongcheng Rd., Tucheng Dist.,
New Taipei City 236, Taiwan R.O.C.
Tel: 886-2-2267-8000
Fax: 886-2-2267-2261
amtsales@apacer.com

U.S.A.

Apacer Memory America, Inc.
46732 Lakeview Blvd., Fremont, CA 94538
Tel: 1-408-518-8699
Fax: 1-510-249-9551
sa@apacerus.com

Japan

Apacer Technology Corp.
5F, Matsura Bldg., Shiba, Minato-Ku
Tokyo, 105-0014, Japan
Tel: 81-3-5419-2668
Fax: 81-3-5419-0018
jpservices@apacer.com

Europe

Apacer Technology B.V.
Science Park Eindhoven 5051 5692 EB Son,
The Netherlands
Tel: 31-40-267-0000
Fax: 31-40-290-0686
sales@apacer.nl

China

Apacer Electronic (Shanghai) Co., Ltd
Room D, 22/FL, No.2, Lane 600, JieyunPlaza,
Tianshan RD, Shanghai, 200051, China
Tel: 86-21-6228-9939
Fax: 86-21-6228-9936
sales@apacer.com.cn

India

Apacer Technologies Pvt Ltd,
Unit No.201, “Brigade Corner”, 7th Block Jayanagar,
Yediyur Circle, Bangalore – 560082, India
Tel: 91-80-4152-9061
Fax: 91-80-4170-0215
sales_india@apacer.com

©2017 Apacer Technology Inc.