Apacer

RoHS Recast Compliant

# M.2 2242 Flash Drive

## SS220-M242 Product Specifications



**October 19, 2017**

**Version 1.4**

**Apacer Technology Inc.**
1F, No.32, Zhongcheng Rd., Tucheng Dist., New Taipei City, Taiwan, R.O.C
Tel: +886-2-2267-8000 Fax: +886-2-2267-2261
www.apacer.com

Apacer

# Features:

- **Compliance with SATA Interface**
  - Serial ATA Revision 3.1
  - SATA 6.0 Gbps
  - ATA-8 command set
  - Backward compatible with SATA 1.5/3.0 Gbps
- **Capacity**
  - 1, 2, 4, 8, 16, 32, 64 GB
- **Performance***
  - Interface burst read/write: 600 MB/sec
  - Sequential read: up to 520 MB/sec
  - Sequential write: up to 455 MB/sec
  - Seq. read QD32: Up to 530 MB/sec
  - Seq. write QD32: Up to 445 MB/sec
  - Random read 4K: up to 79,000 IOPS
  - Random write 4K: up to 80,000 IOPS
- **Flash Management**
  - Built-in hardware ECC
  - Global Wear Leveling
  - Flash bad-block management
  - Flash Translation Layer: Page Mapping
  - S.M.A.R.T.
  - Power Failure Management
  - ATA Secure Erase
  - TRIM
- **SATA Power Management**
- **NAND Flash Type:** SLC
- **MTBF:** >2,000,000 hours
- **Temperature Range**
  - Operating:
    Standard: 0°C to 70°C
    Extended: -40°C to 85°C
  - Storage: -40°C to 100°C
- **Supply Voltage**
  - 3.3 V ± 5%
- **Power Consumption***
  - Active mode: 570 mA
  - Idle mode: 85 mA
- **Connector Type**
  - 75-pin SATA-based M.2 module pinout
- **Form Factor**
  - M.2 2242-D2-B-M
  - Dimensions: 42.00 x 22.00 x 3.60, unit: ㎜
- **Shock & Vibration****
  - Shock:1,500 G
  - Vibration: 15 G
- **Thermal Sensor**
- **Thermal Management Technique (optional)**
- **Device Sleep (optional)**
- **LED Indicators for Drive Behavior**
- **RoHS Recast Compliant (Complies with 2011/65/EU Standard)**

*Varies from capacities. The values for performances and power consumptions presented are typical and may vary depending on flash configurations or platform settings. The term idle refers to the standby state of the device.
**Non-operating


© 2017 Apacer Technology Inc.

# Table of Contents

**1. General Descriptions ..... 3**

**2. Functional Block ..... 3**

**3. Pin Assignments ..... 4**

**4. Product Specifications ..... 7**

4.1 Capacity ..... 7
4.2 Performance ..... 7
4.3 Environmental Specifications ..... 8
4.4 Mean Time Between Failures (MTBF) ..... 8
4.5 Certification and Compliance ..... 8
4.6 LED Indicator Behavior ..... 9

**5. Flash Management ..... 10**

5.1 Error Correction/Detection ..... 10
5.2 Bad Block Management ..... 10
5.3 Global Wear Leveling ..... 10
5.4 Flash Translation Layer – Page Mapping ..... 10
5.5 ATA Secure Erase ..... 10
5.6 Power Failure Management ..... 11
5.7 TRIM ..... 11
5.8 Thermal Sensor ..... 11
5.9 Thermal Management Technique (optional) ..... 11
5.10 SATA Power Management ..... 12
5.11 DEVSLP (DevSleep or DEVSLP) Mode (optional) ..... 12

**6. Software Interface ..... 13**

6.1 Command Set ..... 13
6.2 S.M.A.R.T. ..... 13

**7. Electrical Specifications ..... 15**

7.1 Operating Voltage ..... 15
7.2 Power Consumption ..... 15

**8. Physical Characteristics ..... 16**

8.1 Dimensions ..... 16

**9. Product Ordering Information ..... 17**

9.1 Product Code Designations ..... 17
9.2 Valid Combinations ..... 18



© 2017 Apacer Technology Inc.

# 1. General Descriptions

Apacer's SS220-M242 (M.2 2242) is the next generation modularized Solid State Drive (SSD) with the shape of all new M.2 form factor, with the aim to be the more suitable for mobile and compact computers with standard width at only 22.00 mm. SS220-M242 appears in M.2 2242 mechanical dimensions and is believed to be the leading add-in storage solution for future host computing systems.

The M.2 SSD is designed with SATA-based connector pinouts, providing full compliance with the latest SATA Revision 3.1 interface specifications. Aside from SATA compliance, SS220-M242 delivers exceptional performance and power efficiency. On the other hand, the extreme thin and light form factor makes SS220-M242 the ideal choice for mobile computing systems, which appears to be the trend in near future.

Regarding reliability, SS220-M242 is built with a powerful SATA controller that supports on-the-module ECC as well as efficient wear leveling scheme. Since it is operating under SATA 6.0 Gbps interface, SS220-M242 is provided with Apacer latest S.M.A.R.T. that are primarily oriented for the latest SATA interface SSD, for drive lifetime monitoring and analyzing.

# 2. Functional Block

Apacer SS220-M242 includes a single-chip SATA 6.0 Gbps and the flash media. The controller integrates the flash management unit to support multi-channel, multi-bank flash arrays. Figure 2-1 shows the functional block diagram.

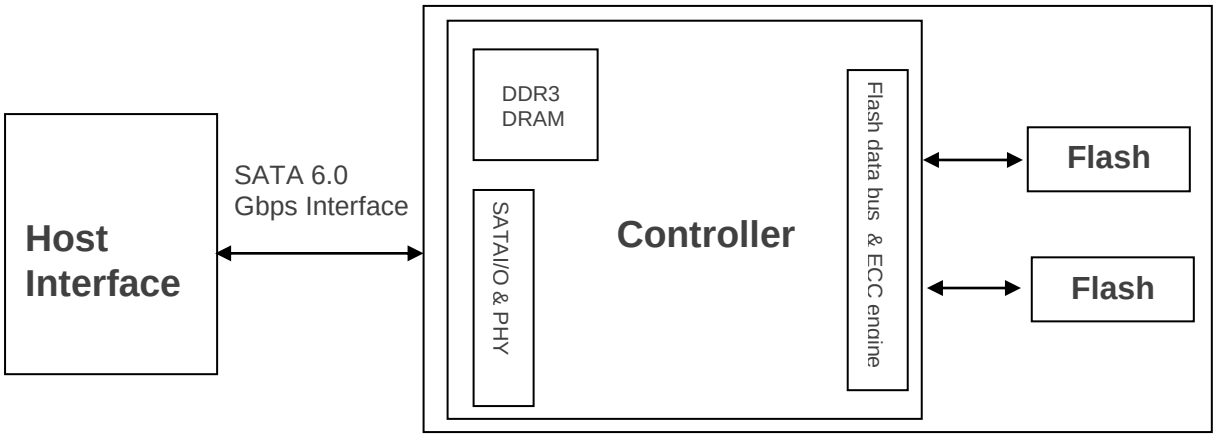


**Figure 2-1** Block Diagram


© 2017 Apacer Technology Inc.

# 3. Pin Assignments

This connector does not support hot plug capability. There are a total of 75 pins. 12 pin locations are used for mechanical key locations; this allows such a module to plug into both Key B and Key M connectors.

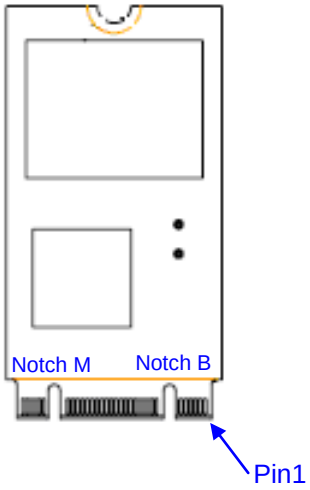


**Table 3-1** Pin Assignments

| Pin | Type | Description |
|---|---|---|
| 1 | CONFIG_3 | Ground (according to M.2 configurations for SSD-SATA definition) |
| 2 | 3.3V | Supply Pin, 3.3V |
| 3 | GND | Ground |
| 4 | 3.3V | Supply pin, 3.3V |
| 5 | No connect | No connect |
| 6 | Not available | No connect (used for other purposes) |
| 7 | Not available | No connect (used for other purposes) |
| 8 | Not available | No connect (used for other purposes) |
| 9 | No connect | No connect |
| 10 | DAS/DSS | Device Activity Signal/Disable Staggered Spin-up |
| 11 | No connect | No connect (used for other purposes) |
| 12 | (removed for key) | Mechanical notch B |
| 13 | (removed for key) | Mechanical notch B |
| 14 | (removed for key) | Mechanical notch B |
| 15 | (removed for key) | Mechanical notch B |
| 16 | (removed for key) | Mechanical notch B |
| 17 | (removed for key) | Mechanical notch B |
| 18 | (removed for key) | Mechanical notch B |
| 19 | (removed for key) | Mechanical notch B |


© 2017 Apacer Technology Inc.

| Pin | Type | Description |
|---|---|---|
| 20 | Not available | No connect (used for other purposes) |
| 21 | CONFIG_0 | Ground (according to M.2 configurations for SSD-SATA definition) |
| 22 | Not available | No connect (used for other purposes) |
| 23 | Not available | No connect (used for other purposes) |
| 24 | Not available | No connect (used for other purposes) |
| 25 | Not available | No connect (used for other purposes) |
| 26 | Not available | No connect (used for other purposes) |
| 27 | GND | Ground |
| 28 | Not available | No connect (used for other purposes) |
| 29 | PERn1 | Not used |
| 30 | Not available | No connect (used for other purposes) |
| 31 | PERp1 | Not used |
| 32 | Not available | No connect (used for other purposes) |
| 33 | GND | Ground |
| 34 | Not available | No connect (used for other purposes) |
| 35 | PETn1 | Not used |
| 36 | Not available | No connect (used for other purposes) |
| 37 | PETp1 | Not used |
| 38 | DEVSLP | Device Sleep, input. If driven high the host is informing the SSD to enter a low power state |
| 39 | GND | Ground |
| 40 | Not available | No connect (used for other purposes) |
| 41 | SATA-Rx+ | Host receiver differential signal pair |
| 42 | Not available | No connect (used for other purposes) |
| 43 | SATA-Rx- | Host receiver differential signal pair |
| 44 | Not available | No connect (used for other purposes) |
| 45 | GND | Ground |
| 46 | Not available | No connect (used for other purposes) |
| 47 | SATA-Tx- | Host transmitter differential pair |
| 48 | Not available | No connect (used for other purposes) |
| 49 | SATA-Tx+ | Host transmitter differential pair |
| 50 | PERST# | Not used |
| 51 | GND | Ground |
| 52 | CLKREQ# | Not used |
| 53 | REFCLKN | Not used |
| 54 | PEWAKE# | Not used |
| 55 | REFCLKP | Not used |


© 2017 Apacer Technology Inc.

| Pin | Type | Description |
|---|---|---|
| 56 | MFG1 | Manufacturing pin. Use determined by vendor (no connect on a host) |
| 57 | GND | Ground |
| 58 | MFG2 | Manufacturing pin. Use determined by vendor (no connect on a host) |
| 59 | (removed for key) | Mechanical notch B |
| 60 | (removed for key) | Mechanical notch B |
| 61 | (removed for key) | Mechanical notch B |
| 62 | (removed for key) | Mechanical notch B |
| 63 | (removed for key) | Mechanical notch B |
| 64 | (removed for key) | Mechanical notch B |
| 65 | (removed for key) | Mechanical notch B |
| 66 | (removed for key) | Mechanical notch B |
| 67 | Not available | No connect (used for other purposes) |
| 68 | SUSCLK | Not used |
| 69 | CONFIG_1 | Ground |
| 70 | 3.3V | Supply pin, 3.3V |
| 71 | GND | Ground |
| 72 | 3.3V | Supply pin, 3.3V |
| 73 | GND | Ground |
| 74 | 3.3V | Supply pin, 3.3V |
| 75 | CONFIG_2 | Ground |

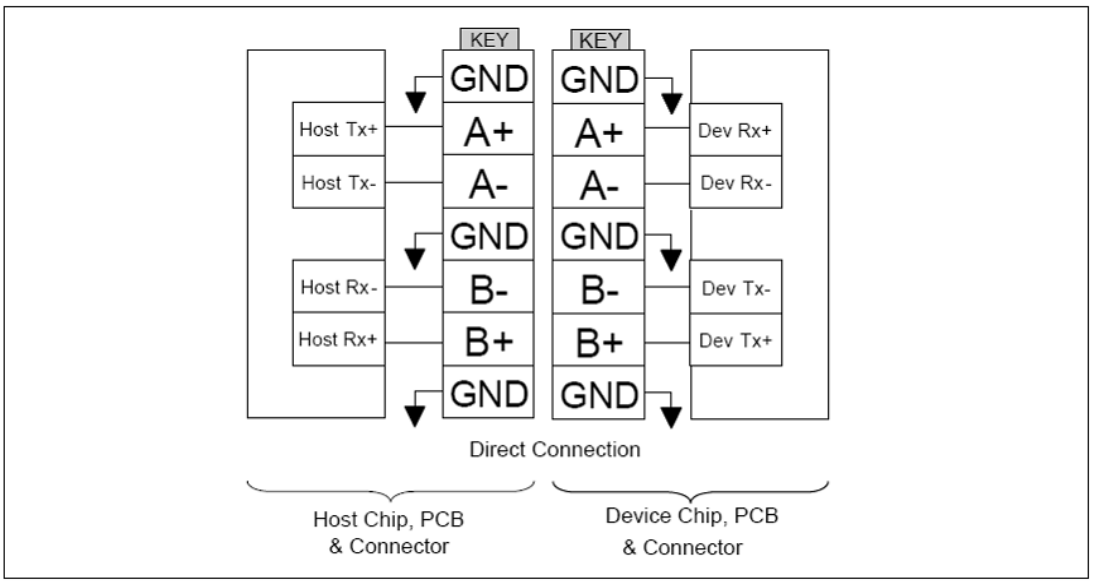


**Figure 3-1** Direct Connection between the Host and Device



© 2017 Apacer Technology Inc.

# 4. Product Specifications

## 4.1 Capacity

Capacity specifications of SS220-M242 are available as shown in Table 4-1. It lists the specific capacity and the default numbers of heads, sectors and cylinders for each product line.

**Table 4-1** Capacity Specifications

| Capacity | Total bytes* | Cylinders | Heads | Sectors | Max LBA |
|---|---|---|---|---|---|
| 1 GB | 1,011,032,064 | 1,959 | 16 | 63 | 1,974,672 |
| 2 GB | 2,011,226,112 | 3,897 | 16 | 63 | 3,928,176 |
| 4 GB | 4,011,614,208 | 7,773 | 16 | 63 | 7,835,184 |
| 8 GB | 8,012,390,400 | 15,525 | 16 | 63 | 15,649,200 |
| 16 GB | 16,013,942,784 | 16,383 | 16 | 63 | 31,277,232 |
| 32 GB | 32,017,047,552 | 16,383 | 16 | 63 | 62,533,296 |
| 64 GB | 64,023,257,088 | 16,383 | 16 | 63 | 125,045,424 |

*Display of total bytes varies from file systems, which means not all of the bytes can be used for storage.
**Notes: 1 GB = 1,000,000,000 bytes; 1 sector = 512 bytes.
LBA count addressed in the table above indicates total user storage capacity and will remain the same throughout the lifespan of the device. However, the total usable capacity of the SSD is most likely to be less than the total physical capacity because a small portion of the capacity is reserved for device maintenance usages.

## 4.2 Performance

Performance of SS220-M242 is listed below in Table 4-2.

**Table 4-2** Performance Specifications

| Capacity / Performance | 1 GB | 2 GB | 4 GB | 8 GB | 16 GB | 32 GB | 64 GB |
|---|---|---|---|---|---|---|---|
| **Sequential Read* (MB/s)** | 32 | 60 | 65 | 55 | 65 | 60 | 520 |
| **Sequential Write* (MB/s)** | 14 | 27 | 55 | 37 | 60 | 60 | 455 |
| **Seq. Read QD32* (MB/s)** | 32 | 60 | 65 | 60 | 65 | 65 | 530 |
| **Seq. Write QD32* (MB/s)** | 14 | 28 | 55 | 37 | 60 | 60 | 445 |
| **Random Read IOPS** (4K)** | 7,000 | 11,000 | 15,000 | 11,000 | 14,000 | 15,000 | 79,000 |
| **Random Write IOPS** (4K)** | 815 | 1,000 | 3,000 | 4,000 | 11,000 | 15,000 | 80,000 |

Note:
Results may differ from various flash configurations or host system setting.
*Sequential performance is based on CrystalDiskMark 5.2.1 with file size 1,000MB.
**Random performance measured using IOMeter with Queue Depth 32.


© 2017 Apacer Technology Inc.

## 4.3 Environmental Specifications

Environmental specifications of SS220-M242 product follow MIL-STD-810 standards as shown in Table 4-3.

**Table 4-3** Environmental Specifications

| Item | Specifications |
|---|---|
| Operating temp. | 0°C to 70°C (Standard); -40°C to 85°C (Extended) |
| Non-operating temp. | -40°C to 100°C |
| Operating vibration | 7.69 Grms, 20~2000 Hz/random (compliant with MIL-STD-810G) |
| Non-operating vibration | 4.02 Grms, 15 ~ 2000 Hz/sine (compliant with MIL-STD-810G) |
| Operating shock | 50(G), 11(ms), half-sine wave |
| Non-operating shock | 1,500(G), 0.5(ms), half-sine wave |

## 4.4 Mean Time Between Failures (MTBF)

Mean Time Between Failures (MTBF) is predicted based on reliability data for the individual components in SS220-M242. The prediction result for SS220-M242 is more than 2,000,000 hours.

Note: The MTBF is predicated and calculated based on “Telcordia Technologies Special Report, SR-332, Issue 2” method.

## 4.5 Certification and Compliance

SS220-M242 complies with the following standards:

- CE
- FCC
- RoHS Recast
- MIL-STD-810


© 2017 Apacer Technology Inc.

## 4.6 LED Indicator Behavior

The behavior of the SS220-M242 LED indicators is described in Table 4-4.

**Table 4-4** LED Behavior

| Location | LED | Description |
|---|---|---|
| LED A | DAS | LED blinks when the drive is being accessed |
| LED B | PHY | LED blinks when PHY is connected |





© 2017 Apacer Technology Inc.

# 5. Flash Management

## 5.1 Error Correction/Detection

SS220-M242 implements a hardware ECC scheme, based on the BCH algorithm. It can detect and correct up to 40 bit error in 1K bytes.

## 5.2 Bad Block Management

Current production technology is unable to guarantee total reliability of NAND flash memory array. When a flash memory device leaves factory, it comes with a minimal number of initial bad blocks during production or out-of-factory as there is no currently known technology that produce flash chips free of bad blocks. In addition, bad blocks may develop during program/erase cycles. When host performs program/erase command on a block, bad block may appear in Status Register. Since bad blocks are inevitable, the solution is to keep them in control. Apacer flash devices are programmed with ECC, page mapping technique and S.M.A.R.T to reduce invalidity or error. Once bad blocks are detected, data in those blocks will be transferred to free blocks and error will be corrected by designated algorithms.

## 5.3 Global Wear Leveling

Flash memory devices differ from Hard Disk Drives (HDDs) in terms of how blocks are utilized. For HDDs, when a change is made to stored data, like erase or update, the controller mechanism on HDDs will perform overwrites on blocks. Unlike HDDs, flash blocks cannot be overwritten and each P/E cycle wears down the lifespan of blocks gradually. Repeatedly program/erase cycles performed on the same memory cells will eventually cause some blocks to age faster than others. This would bring flash storages to their end of service term sooner. Global wear leveling is an important mechanism that levels out the wearing of all blocks so that the wearing-down of all blocks can be almost evenly distributed. This will increase the lifespan of SSDs.

## 5.4 Flash Translation Layer – Page Mapping

Page mapping is an advanced flash management technology whose essence lies in the ability to gather data, distribute the data into flash pages automatically, and then schedule the data to be evenly written. Page-level mapping uses one page as the unit of mapping. The most important characteristic is that each logical page can be mapped to any physical page on the flash memory device. This mapping algorithm allows different sizes of data to be written to a block as if the data is written to a data pool and it does not need to take extra operations to process a write command. Thus, page mapping is adopted to increase random access speed and improve SSD lifespan, reduce block erase frequency, and achieve optimized performance and lifespan.

## 5.5 ATA Secure Erase

ATA Secure Erase is an ATA disk purging command currently embedded in most of the storage drives. Defined in ATA specifications, (ATA) Secure Erase is part of Security Feature Set that allows storage drives to erase all user data areas. The erase process usually runs on the firmware level as most of the ATA-based storage media currently in the market are built-in with this command. ATA Secure Erase can securely wipe out the user data in the drive and protects it from malicious attack.


© 2017 Apacer Technology Inc.

## 5.6 Power Failure Management

Power Failure Management plays a crucial role when experiencing unstable power supply. Power disruption may occur when users are storing data into the SSD. In this urgent situation, the controller would run multiple write-to-flash cycles to store the metadata for later block rebuilding. This urgent operation requires about several milliseconds to get it done. At the next power up, the firmware will perform a status tracking to retrieve the mapping table and resume previously programmed NAND blocks to check if there is any incompleteness of transmission.

## 5.7 TRIM

TRIM is a SATA command that helps improve the read/write performance and efficiency of solid-state drives (SSD). The command enables the host operating system to inform SSD controller which blocks contain invalid data, mostly because of the erase commands from host. The invalid will be discarded permanently and the SSD will retain more space for itself.

## 5.8 Thermal Sensor

Apacer Thermal Sensor is a digital temperature sensor with serial interface. By using designated pins for transmission, storage device owners are able to read temperature data.

## 5.9 Thermal Management Technique (optional)

Thermal management technique can monitor the temperature of the SSD equipped with a built-in thermal sensor via S.M.A.R.T. commands. This method can ensure the temperature of the device stays within temperature limits by drive throttling, i.e. reducing the speed of the drive when the device temperature reaches the threshold level, so as to prevent overheating, guarantee data reliability, and prolong product lifespan. When the temperature exceeds the maximum threshold level, thermal throttling will be triggered to reduce performance step by step to prevent hardware components from being damaged. Performance is only permitted to drop to the extent necessary for recovering a stable temperature to cool down the device's temperature. Once the temperature decreases to the minimum threshold value, transfer speeds will rise back to its optimum performance level.


© 2017 Apacer Technology Inc.

## 5.10 SATA Power Management

By complying with SATA 6.0 Gb/s specifications, the SSD supports the following SATA power saving modes:

- ACTIVE: PHY ready, full power, Tx & Rx operational
- PARTIAL: Reduces power, resumes in under 10 µs (microseconds)
- SLUMBER: Reduces power, resumes in under 10 ms (milliseconds)
- HIPM: Host-Initiated Power Management
- DIPM: Device-Initiated Power Management
- AUTO-SLUMBER: Automatic transition from partial to slumber.

Note: The behaviors of power management features would depend on host/device settings.

## 5.11 DEVSLP (DevSleep or DEVSLP) Mode (optional)

Device Sleep is a feature that allows SATA devices to enter a low power mode by designating pin 38 as DEVSLP signal with an aim to reducing power consumption.

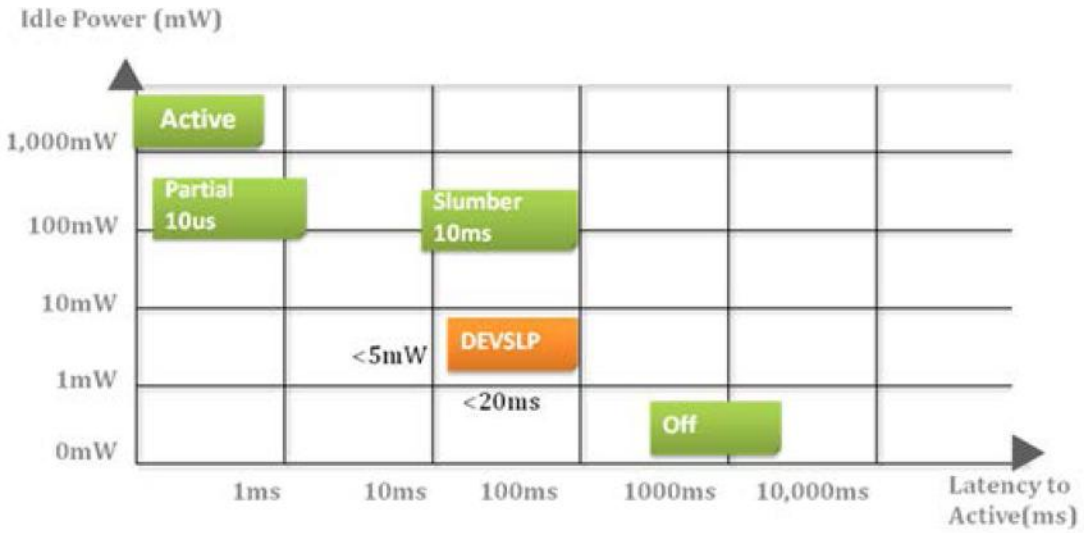



© 2017 Apacer Technology Inc.

# 6. Software Interface

## 6.1 Command Set

This section defines the software requirements and the format of the commands the host sends to SS220-M242. Commands are issued to SS220-M242 by loading the required registers in the command block with the supplied parameters, and then writing the command code to the Command register.

**Table 6-1** Command Set

| Code | Command | Code | Command |
|---|---|---|---|
| E5h | Check Power Mode | F3h | Security Erase Prepare |
| 06h | Data Set Management | F4h | Security Erase Unit |
| 90h | Execute Device Diagnostic | F5h | Security Freeze Lock |
| E7h | Flush Cache | F1h | Security Set Password |
| EAh | Flush Cache EXT | F2h | Security Unlock |
| ECh | Identify Device | 70h | Seek |
| E3h | Idle | EFh | Set Features |
| E1h | Idle Immediate | C6h | Set Multiple Mode |
| 91h | Initialize Device Parameters | E6h | Sleep |
| C8h | Read DMA | B0h | SMART |
| 25h | Read DMA EXT | E2h | Standby |
| C4h | Read Multiple | E0h | Standby Immediate |
| 29h | Read Multiple EXT | CAh | Write DMA |
| 20h | Read Sector | 35h | Write DMA EXT |
| 24h | Read Sector EXT | C5h | Write Multiple |
| 40h | Read Verify Sectors | 39h | Write Multiple EXT |
| 42h | Read Verify Sectors EXT | 30h | Write Sector |
| 10h | Recalibrate | 34h | Write Sector EXT |
| F6h | Security Disable Password | | |

## 6.2 S.M.A.R.T.

S.M.A.R.T. is an abbreviation for Self-Monitoring, Analysis and Reporting Technology, a self-monitoring system that provides indicators of drive health as well as potential disk problems. It serves as a warning for users from unscheduled downtime by monitoring and displaying critical drive information. Ideally, this should allow taking proactive actions to prevent drive failure and make use of S.M.A.R.T. information for future product development reference.

Apacer devices use the standard SMART command B0h to read data out from the drive to activate our S.M.A.R.T. feature that complies with the ATA/ATAPI specifications. S.M.A.R.T. Attribute IDs shall include initial bad block count, total later bad block count, maximum erase count, average erase count, power on hours and power cycle. When the S.M.A.R.T. Utility running on the host, it analyzes and reports the disk status to the host before the device reaches in critical condition.


© 2017 Apacer Technology Inc.

Note: Attribute IDs may vary from product models due to various solution design and supporting capabilities.

Apacer memory products come with S.M.A.R.T. commands and subcommands for users to obtain information of drive status and to predict potential drive failures. Users can take advantage of the following commands/subcommands to monitor the health of the drive.

| Code | SMART Subcommand |
|---|---|
| D0h | READ DATA |
| D1h | READ ATTRIBUTE THRESHOLDS |
| D2h | Enable/Disable Attribute Autosave |
| D4h | Execute Off-line Immediate |
| D5h | Read Log (optional) |
| D6h | Write Log (optional) |
| D8h | Enable Operations |
| D9h | Disable operations |
| DAh | Return Status |

**General SMART attribute structure**

| Byte | Description |
|---|---|
| 0 | ID (Hex) |
| 1 – 2 | Status flag |
| 3 | Value |
| 4 | Worst |
| 5*-11 | Raw Data |

*Byte 5: LSB

**SMART attribute ID list**

| ID (Hex) | Attribute Name |
|---|---|
| 9 (0x09) | Power-on hours |
| 12 (0x0C) | Power cycle count |
| 163 (0xA3) | Max. erase count |
| 164 (0xA4) | Avg. erase count |
| 166 (0xA6) | Total later bad block count |
| 167 (0xA7) | SSD Protect Mode (vendor specific) |
| 168 (0xA8) | SATA PHY Error Count |
| 175 (0xAF) | Bad Cluster Table Count |
| 192 (0xC0) | Unexpected Power Loss Count |
| 194 (0xC2) | Temperature |
| 241 (0xF1) | Total sectors of write |


© 2017 Apacer Technology Inc.

# 7. Electrical Specifications

## 7.1 Operating Voltage

Table 7-1 lists the supply voltage for SS220-M242.

***Caution:*** **Absolute Maximum Stress Ratings –** Applied conditions greater than those listed under "Absolute Maximum Stress Ratings" may cause permanent damage to the device. This is a stress rating only and functional operation of the device at these conditions or conditions greater than those defined in the operational sections of this data sheet is not implied. Exposure to absolute maximum stress rating conditions may affect device reliability.

**Table 7-1** Operating Range

| Item | Range |
|---|---|
| Supply Voltage | 3.3V ± 5% (3.135-3.465V) |

## 7.2 Power Consumption

Table 7-2 lists the power consumption for SS220-M242.

**Table 7-2** Power Consumption

| Capacity / Mode | 1 GB | 2 GB | 4 GB | 8 GB | 16 GB | 32 GB | 64 GB |
|---|---|---|---|---|---|---|---|
| **Active (mA)** | 210 | 235 | 270 | 230 | 265 | 280 | 570 |
| **Idle (mA)** | 80 | 80 | 75 | 85 | 85 | 80 | 75 |

Note:
*All values are typical and may vary depending on flash configurations or host system settings.
**Active power is an average power measurement performed using CrystalDiskMark with 128KB sequential read/write transfers.


© 2017 Apacer Technology Inc.

# 8. Physical Characteristics

## 8.1 Dimensions

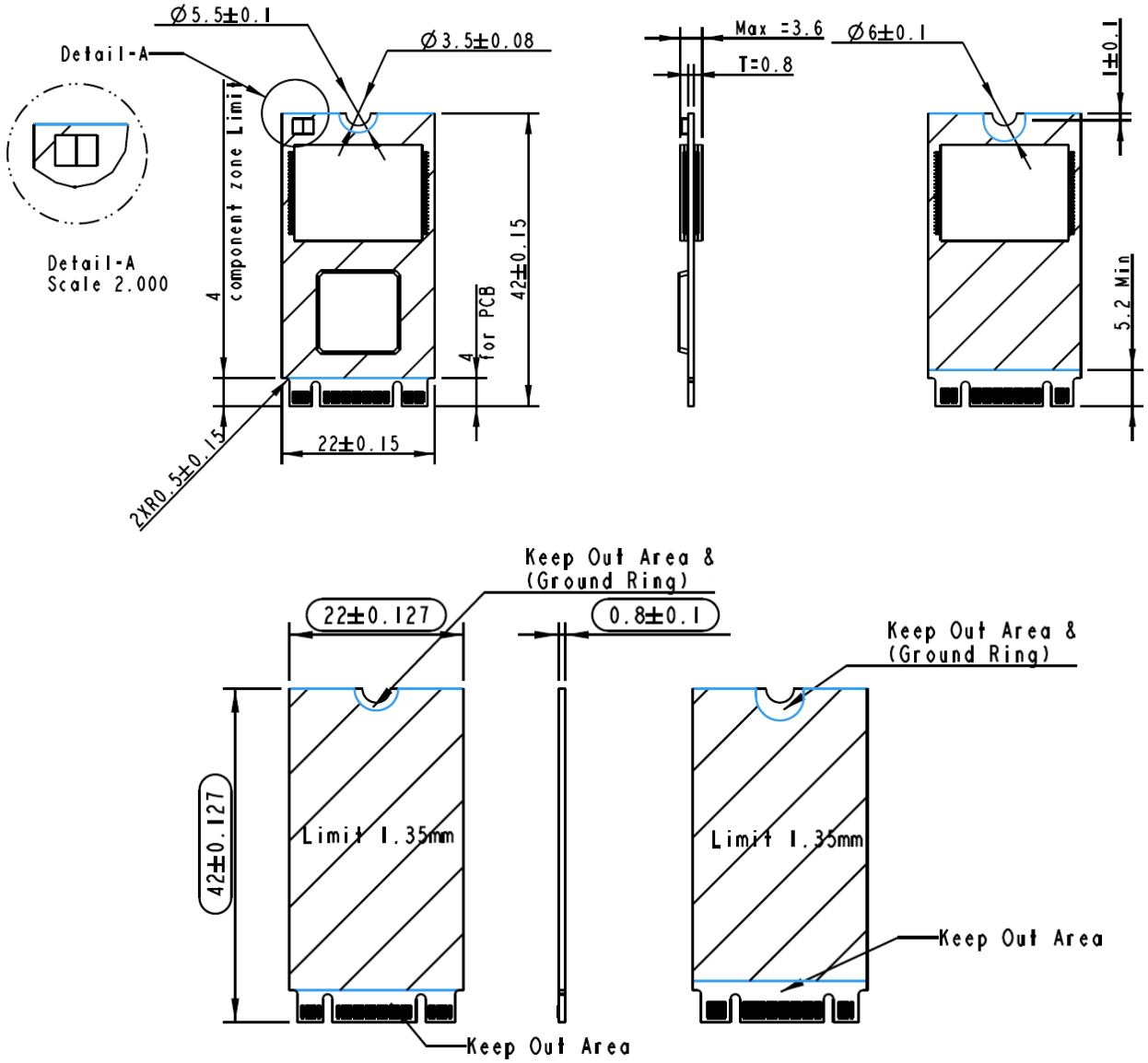




© 2017 Apacer Technology Inc.

# 9. Product Ordering Information

## 9.1 Product Code Designations

AP M2 T42 SM22 xxxG XN – 4X TX X

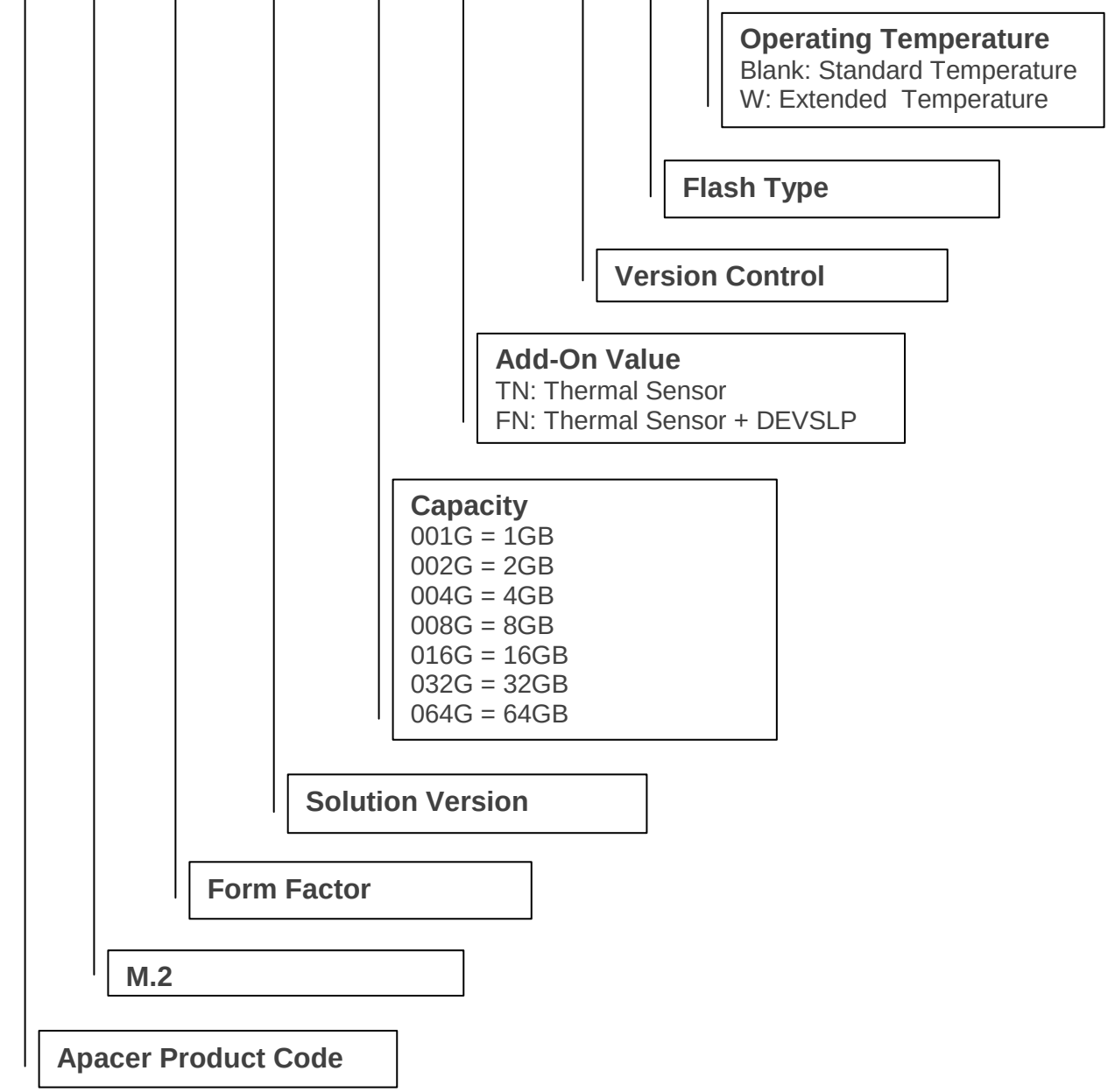




© 2017 Apacer Technology Inc.

## 9.2 Valid Combinations

### 9.2.1 Without DEVSLP

| Capacity | Standard Temperature | Extended Temperature |
|---|---|---|
| 1GB | APM2T42SM22001GTN-4ET | APM2T42SM22001GTN-4ETW |
| 2GB | APM2T42SM22002GTN-4ET | APM2T42SM22002GTN-4ETW |
| 4GB | APM2T42SM22004GTN-4ET | APM2T42SM22004GTN-4ETW |
| 8GB | APM2T42SM22008GTN-4ET | APM2T42SM22008GTN-4ETW |
| 16GB | APM2T42SM22016GTN-4ET | APM2T42SM22016GTN-4ETW |
| 32GB | APM2T42SM22032GTN-4ET | APM2T42SM22032GTN-4ETW |
| 64GB | APM2T42SM22064GTN-4ETG | APM2T42SM22064GTN-4ETGW |

### 9.2.2 With DEVSLP (optional)

| Capacity | Standard Temperature | Extended Temperature |
|---|---|---|
| 1GB | APM2T42SM22001GTN-4FT | APM2T42SM22001GTN-4FTW |
| 2GB | APM2T42SM22002GTN-4FT | APM2T42SM22002GTN-4FTW |
| 4GB | APM2T42SM22004GTN-4FT | APM2T42SM22004GTN-4FTW |
| 8GB | APM2T42SM22008GTN-4FT | APM2T42SM22008GTN-4FTW |
| 16GB | APM2T42SM22016GTN-4FT | APM2T42SM22016GTN-4FTW |
| 32GB | APM2T42SM22032GTN-4FT | APM2T42SM22032GTN-4FTW |
| 64GB | APM2T42SM22064GTN-4FTG | APM2T42SM22064GTN-4FTGW |

**Note:** Valid combinations are those products in mass production or will be in mass production. Consult your Apacer sales representative to confirm availability of valid combinations and to determine availability of new combinations.


© 2017 Apacer Technology Inc.

# Revision History

| Revision | Description | Date |
|---|---|---|
| 0.1 | Preliminary release | 3/22/2017 |
| 1.0 | Official release | 5/11/2017 |
| 1.1 | Added 64GB support | 6/14/2017 |
| 1.2 | Added a figure to 3. Pin Assignments | 7/13/2017 |
| 1.3 | Updated product ordering information for 64GB | 7/31/2017 |
| 1.4 | Updated seq. read/write QD32 performance for 64GB | 10/19/2017 |


© 2017 Apacer Technology Inc.

# Global Presence


## Taiwan (Headquarters)
**Apacer Technology Inc.**
1F., No.32, Zhongcheng Rd., Tucheng Dist.,
New Taipei City 236, Taiwan R.O.C.
Tel: 886-2-2267-8000
Fax: 886-2-2267-2261
amtsales@apacer.com

## U.S.A.
**Apacer Memory America, Inc.**
46732 Lakeview Blvd., Fremont, CA 94538
Tel: 1-408-518-8699
Fax: 1-510-249-9551
sa@apacerus.com

## Japan
**Apacer Technology Corp.**
5F, Matsura Bldg., Shiba, Minato-Ku
Tokyo, 105-0014, Japan
Tel: 81-3-5419-2668
Fax: 81-3-5419-0018
jpservices@apacer.com

## Europe
**Apacer Technology B.V.**
Science Park Eindhoven 5051 5692 EB Son,
The Netherlands
Tel: 31-40-267-0000
Fax: 31-40-290-0686
sales@apacer.nl

## China
**Apacer Electronic (Shanghai) Co., Ltd**
Room D, 22/FL, No.2, Lane 600, JieyunPlaza,
Tianshan RD, Shanghai, 200051, China
Tel: 86-21-6228-9939
Fax: 86-21-6228-9936
sales@apacer.com.cn

## India
**Apacer Technologies Pvt Ltd,**
Unit No.201, “Brigade Corner”, 7th Block
Jayanagar,
Yediyur Circle, Bangalore – 560082, India
Tel: 91-80-4152-9061
Fax: 91-80-4170-0215
sales_india@apacer.com



© 2017 Apacer Technology Inc.