Apacer

RoHS Recast Compliant

M.2 2242 Flash Drive

Industrial SS220-M242 Product Specifications



March 4, 2024

Version 1.3

Apacer Technology Inc.
1F, No.32, Zhongcheng Rd., Tucheng Dist., New Taipei City, Taiwan, R.O.C
Tel: +886-2-2267-8000 Fax: +886-2-2267-2261
www.apacer.com

Apacer

Specifications Overview:

- **Compliance with SATA Revision 3.1**
  - SATA 6 Gb/s
  - ATA-8 command set
  - Backward compatible with SATA 1.5/3 Gb/s
- **Capacity**
  - 1, 2, 4, 8, 16, 32, 64 GB
- **Performance**[1]
  - Interface burst read/write: 600 MB/sec
  - Sequential read: up to 555 MB/sec
  - Sequential write: up to 450 MB/sec
  - Random read 4K: up to 85,000 IOPS
  - Random write 4K: up to 77,000 IOPS
- **DRAM Cache for Enhanced Random Performance**
- **Flash Management**
  - Built-in hardware ECC
  - Global Wear Leveling
  - Flash bad-block management
  - Flash Translation Layer: Page Mapping
  - S.M.A.R.T.
  - Power Failure Management
  - Device Sleep (optional)
  - ATA Secure Erase
  - TRIM
  - SMART Read Refresh™
- **Endurance (in Terabytes Written: TBW)**
  - 1 GB: 2 TBW
  - 2 GB: 6 TBW
  - 4 GB: 82 TBW
  - 8 GB: 270 TBW
  - 16 GB: 616 TBW
  - 32 GB: 1,358 TBW
  - 64 GB: 2,245 TBW
- **Temperature Range**
  - Operating:
    - Standard: 0°C to 70°C
    - Wide: -40°C to 85°C
  - Storage: -55°C to 100°C
- **Supply Voltage**
  - 3.3V ± 5%
- **Power Consumption**[1]
  - Active mode (Max.): 520 mA
  - Idle mode: 85 mA
- **SATA Power Management**
- **Connector Type**
  - M.2 B & M key
- **NAND Flash Type:** SLC
- **MTBF:** >3,000,000 hours
- **Reliability**
  - Thermal Sensor
  - Thermal Throttling (optional)
- **Physical Characteristics**
  - Form factor: Double-sided M.2 2242-D5-B-M
  - Dimensions: 42.00 x 22.00 x 3.88(max.), unit: mm
- **LED Indicators for Drive Behavior**
- **RoHS Recast Compliant (Complies with 2011/65/EU Standard)**

Note:
1. Varies from capacities. The values for performances and power consumptions presented are typical and may vary depending on flash configurations or platform settings. The term idle refers to the standby state of the device.

© 2024 Apacer Technology Inc.

Table of Contents

1. General Descriptions 4

2. Functional Block 4

3. Pin Assignments 5

4. Product Specifications 8

4.1 Capacity 8
4.2 Performance 8
4.3 Environmental Specifications 9
4.4 Mean Time Between Failures (MTBF) 9
4.5 Certification and Compliance 9
4.6 Endurance 10
4.7 LED Indicator Behavior 10

5. Flash Management 11

5.1 Error Correction/Detection 11
5.2 Bad Block Management 11
5.3 Global Wear Leveling 11
5.4 Flash Translation Layer – Page Mapping 11
5.5 ATA Secure Erase 11
5.6 Power Failure Management 12
5.7 TRIM 12
5.8 Device Sleep (DevSleep or DEVSLP) Mode (optional) 12
5.9 SMART Read Refresh™ 12
5.10 SATA Power Management 13

6. Reliability Features 14

6.1 Thermal Sensor 14
6.2 Thermal Throttling (optional) 14

7. Software Interface 15

7.1 Command Set 15
7.2 S.M.A.R.T. 16

8. Electrical Specifications 17

8.1 Operating Voltage 17

© 2024 Apacer Technology Inc.

8.2 Power Consumption 17

9. Mechanical Specifications 18

10. Product Ordering Information 19

10.1 Product Code Designations 19

10.2 Valid Combinations 20

© 2024 Apacer Technology Inc.

1. General Descriptions

Apacer SS220-M242 is the next generation Solid State Drive (SSD) with compact size and great performance. Designed in SATA 6 Gb/s interface, SS220-M242 provides full compliance with the latest SATA Revision 3.1 interface specifications and delivers exceptional read/write speed. For data efficiency, the internal controlling unit of the SSD is engineered with DRAM for enhanced random performance, making it the leading add-in storage solution for future host computing systems.

SS220-M242 is built with a powerful SATA controller that supports on-the-module ECC as well as efficient wear leveling scheme to extend SSD endurance and increase data reliability. Since it is operating under SATA 6 Gb/s interface, SS220-M242 is provided with Apacer latest S.M.A.R.T. that are primarily oriented for the latest SATA interface SSD, for drive lifetime monitoring and analysis. Furthermore, SS220-M242 is equipped with a built-in thermal sensor to monitor the temperature of the SSD via S.M.A.R.T commands and configured with thermal throttling to dynamically adjust frequency scaling to enhance data reliability and provide sustained performance while overheating.

In terms of flash management, SS220-M242 also adopts the latest page mapping file translation layer and comes with various implementations including flash block management, ATA secure erase, power failure management, TRIM, Device Sleep, SMART Read Refresh, and power saving modes.

With exceptional performance and enhanced reliability, SS220-M242 is definitely the ideal storage or cache solution for a variety of applications ranging from industrial, imaging, computing to enterprise markets.

2. Functional Block

Apacer SS220-M242 includes a single-chip controller designed with a DRAM and flash media. The controller integrates the flash management unit to support multi-channel, multi-bank flash arrays. Figure 2-1 shows the functional block diagram.

Note: The actual number of NAND flash used on Apacer SS220-M242 varies from capacities. The illustration is for reference only.

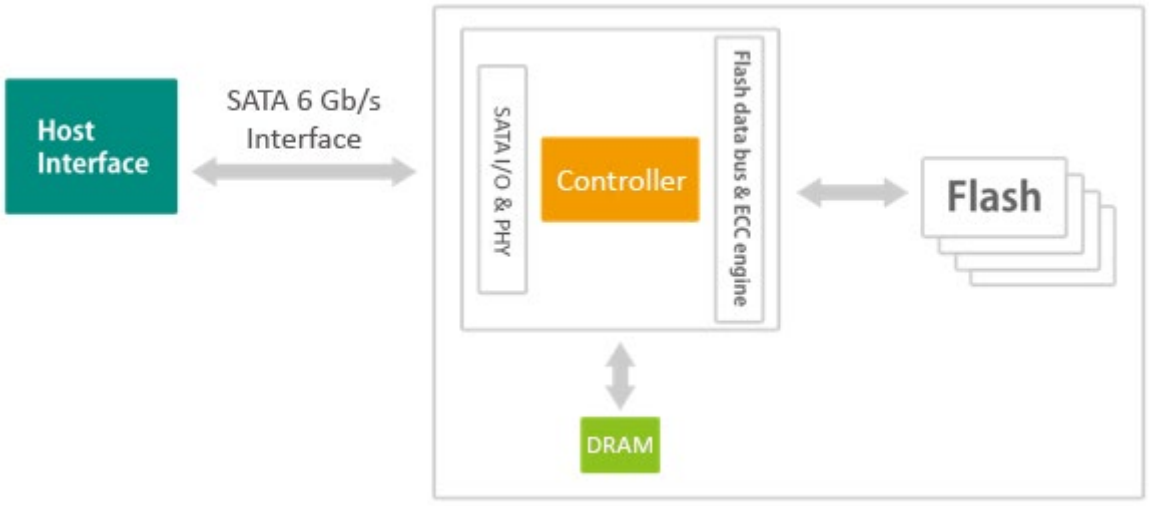

Figure 2-1 Functional Block Diagram

© 2024 Apacer Technology Inc.

3. Pin Assignments

This connector does not support hot plug capability. There are a total of 75 pins. 12 pin locations are used for mechanical key locations; this allows such a module to plug into both Key B and Key M connectors.

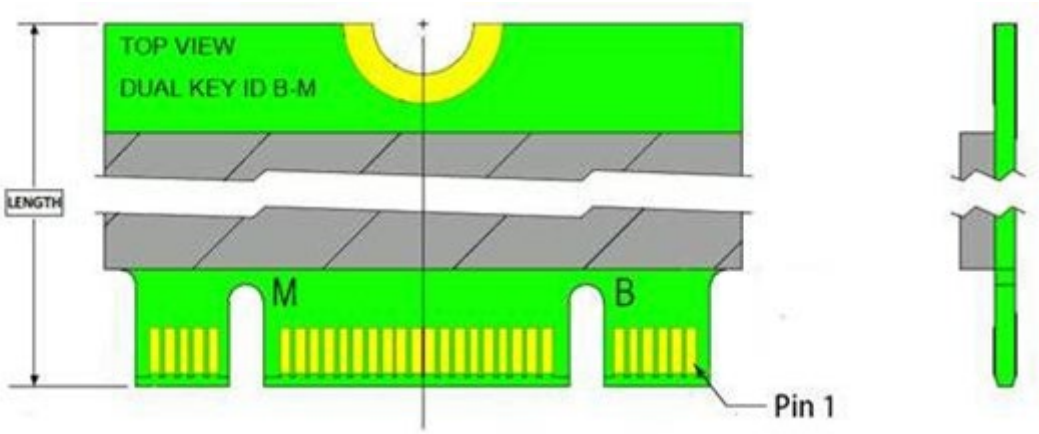

Figure 3-1 Pin Connectors

Table 3-1 Pin Assignments

Pin No.	Type	Description
1	CONFIG_3	Ground (according to M.2 configurations for SSD-SATA definition)
2	3.3V	Supply Pin, 3.3V
3	GND	Ground
4	3.3V	Supply pin, 3.3V
5	No connect	No connect
6	Not available	No connect
7	Not available	No connect
8	Not available	No connect
9	No connect	No connect
10	DAS/DSS	Device Activity Signal/Disable Staggered Spin-up
11	No connect	No connect
12	(removed for key)	Mechanical notch B
13	(removed for key)	Mechanical notch B
14	(removed for key)	Mechanical notch B
15	(removed for key)	Mechanical notch B
16	(removed for key)	Mechanical notch B
17	(removed for key)	Mechanical notch B
18	(removed for key)	Mechanical notch B
19	(removed for key)	Mechanical notch B
20	Not available	No connect
21	CONFIG_0	Ground (according to M.2 configurations for SSD-SATA definition)

© 2024 Apacer Technology Inc.

Table 3-1 Pin Assignments

Pin No.	Type	Description
22	Not available	No connect
23	Not available	No connect
24	Not available	No connect
25	Not available	No connect
26	Not available	No connect
27	GND	Ground
28	Not available	No connect
29	PERn1	No connect
30	Not available	No connect
31	PERp1	No connect
32	Not available	No connect
33	GND	Ground
34	Not available	No connect
35	PETn1	No connect
36	Not available	No connect
37	PETp1	No connect
38	DEVSLP	Device Sleep, input. If driven high the host is informing the SSD to enter a low power state
39	GND	Ground
40	Not available	No connect
41	SATA-Rx+	Host receiver differential signal pair
42	Not available	No connect
43	SATA-Rx-	Host receiver differential signal pair
44	Not available	No connect
45	GND	Ground
46	Not available	No connect
47	SATA-Tx-	Host transmitter differential pair
48	Not available	No connect
49	SATA-Tx+	Host transmitter differential pair
50	PERST#	No connect
51	GND	Ground
52	CLKREQ#	No connect
53	REFCLKN	No connect
54	PEWAKE#	No connect
55	REFCLKP	No connect
56	MFG1	Reserved for Apacer use only[1]
57	GND	Ground
58	MFG2	Reserved for Apacer use only[1]
59	(removed for key)	Mechanical notch M
60	(removed for key)	Mechanical notch M
61	(removed for key)	Mechanical notch M

© 2024 Apacer Technology Inc.

Table 3-1 Pin Assignments

Pin No.	Type	Description
62	(removed for key)	Mechanical notch M
63	(removed for key)	Mechanical notch M
64	(removed for key)	Mechanical notch M
65	(removed for key)	Mechanical notch M
66	(removed for key)	Mechanical notch M
67	Not available	No connect
68	SUSCLK	No connect
69	CONFIG_1	Ground
70	3.3V	Supply pin, 3.3V
71	GND	Ground
72	3.3V	Supply pin, 3.3V
73	GND	Ground
74	3.3V	Supply pin, 3.3V
75	CONFIG_2	Ground

Note:
1. Reserved by Apacer, please do not connect to a host.

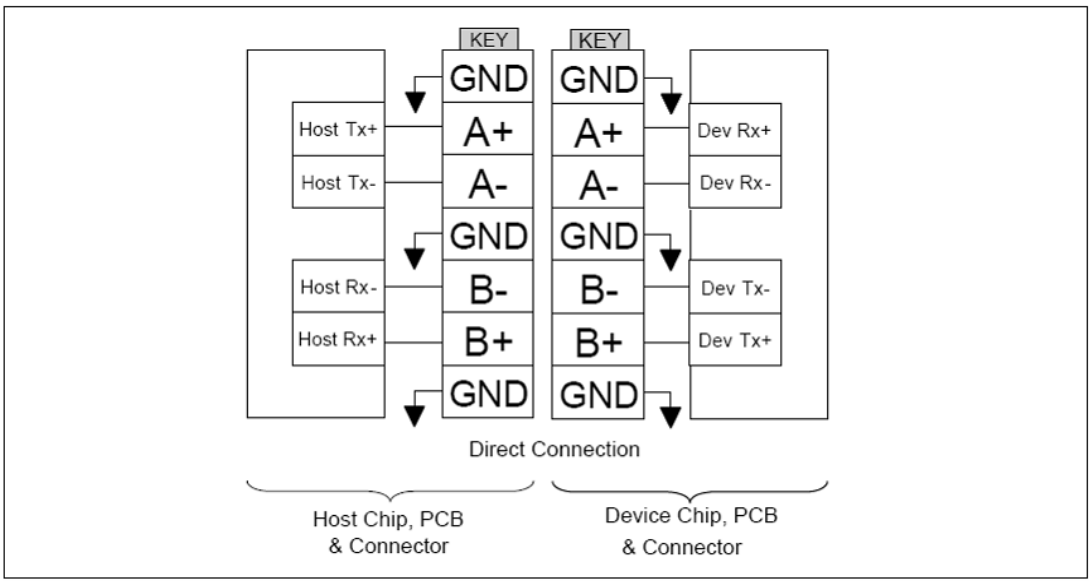

Figure 3-2 Direct Connection between the Host and Device

© 2024 Apacer Technology Inc.

4. Product Specifications

4.1 Capacity

Capacity specifications of SS220-M242 are available as shown in Table 4-1. It lists the specific capacity and the default numbers of heads, sectors and cylinders for each product line.

Table 4-1 Capacity Specifications

Capacity	Total bytes	Cylinders	Heads	Sectors	Total LBA
1 GB	1,011,032,064	1,959	16	63	1,974,672
2 GB	2,011,226,112	3,897	16	63	3,928,176
4 GB	4,011,614,208	7,773	16	63	7,835,184
8 GB	8,012,390,400	15,525	16	63	15,649,200
16 GB	16,013,942,784	16,383	16	63	31,277,232
32 GB	32,017,047,552	16,383	16	63	62,533,296
64 GB	64,023,257,088	16,383	16	63	125,045,424

Notes:
- Display of total bytes varies from operating systems.
- 1 GB = 1,000,000,000 bytes; 1 sector = 512 bytes.
- LBA count addressed in the table above indicates total user storage capacity and will remain the same throughout the lifespan of the device. However, the total usable capacity of the SSD is most likely to be less than the total physical capacity because a small portion of the capacity is reserved for device maintenance usages.

4.2 Performance

Performance of SS220-M242 is listed below in Table 4-2.

Table 4-2 Performance Specifications

Performance \ Capacity	1 GB	2 GB	4 GB	8 GB	16 GB	32 GB	64 GB
Sequential Read (MB/s)	32	60	65	60	70	65	555
Sequential Write (MB/s)	14	28	55	38	65	65	450
4K Random Read (IOPS)	7,000	10,000	15,000	12,000	15,000	16,000	85,000
4K Random Write (IOPS)	700	1,000	3,000	4,000	12,000	16,000	77,000

Notes:
- Results may differ from various flash configurations or host system setting.
- Sequential read/write is based on CrystalDiskMark 5.2.1 with file size 1,000MB.
- Random read/write is measured using IOMeter with Queue Depth 32.

© 2024 Apacer Technology Inc.

4.3 Environmental Specifications

Environmental specifications of SS220-M242 product are as shown in Table 4-3.

Table 4-3 Environmental Specifications

Parameter	Type	Specifications
Temperature	Operating	0°C to 70°C (Standard); -40°C to 85°C (Wide)
	Non-operating	-55°C to 100°C
Vibration	Operating	7.69 GRMS, 20~2000 Hz/random (compliant with MIL-STD-810G)
	Non-operating	4.02 GRMS, 15~2000 Hz/random (compliant with MIL-STD-810G)
Shock	Operating	Acceleration, 50(G)/11(ms)/half sine (compliant with MIL-STD-202G)
	Non-operating	Acceleration, 1500(G)/0.5(ms)/half sine (compliant with MIL-STD-883K)

Note: This Environmental Specification table indicates the conditions for testing the device. Real world usages may affect the results.

4.4 Mean Time Between Failures (MTBF)

Mean Time Between Failures (MTBF) is predicted based on reliability data for the individual components in SS220-M242. The prediction result for SS220-M242 is more than 3,000,000 hours.

Note: The MTBF is predicated and calculated based on “Telcordia Technologies Special Report, SR-332, Issue 3” method.

4.5 Certification and Compliance

SS220-M242 complies with the following standards:

- CE
- UKCA
- FCC
- RoHS Recast
- MIL-STD-810G

© 2024 Apacer Technology Inc.

4.6 Endurance

The endurance of a storage device is predicted by TeraBytes Written based on several factors related to usage, such as the amount of data written into the drive, block management conditions, and daily workload for the drive. Thus, key factors, such as Write Amplifications and the number of P/E cycles, can influence the lifespan of the drive.

Table 4-4 Endurance Specifications

Capacity	TeraBytes Written
1 GB	2
2 GB	6
4 GB	82
8 GB	270
16 GB	616
32 GB	1,358
64 GB	2,245

Notes:

- The measurement assumes the data written to the SSD for test is under a typical and constant rate.
- The measurement follows the standard metric: 1 TB (Terabyte) = 1,000 GB.
- This estimation complies with JEDEC JESD-219, enterprise endurance workload of random data with payload size distribution.

4.7 LED Indicator Behavior

The behavior of the SS220-M242 LED indicators is described in Table 4-5.

Table 4-5 LED Behavior

Location	LED	Description
LED A	PHY	LED blinks when PHY is connected
LED B	DAS	LED blinks when the drive is being accessed

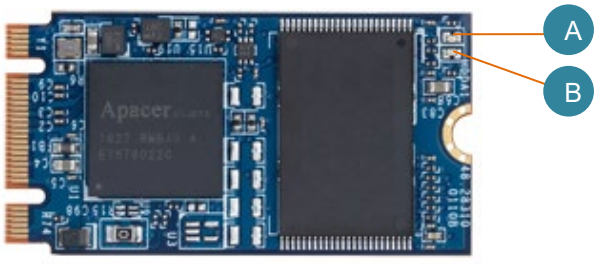

© 2024 Apacer Technology Inc.

5. Flash Management

5.1 Error Correction/Detection

SS220-M242 implements a hardware ECC scheme, based on the BCH algorithm. It can detect and correct up to 72 bit error in 1K bytes.

5.2 Bad Block Management

Current production technology is unable to guarantee total reliability of NAND flash memory array. When a flash memory device leaves factory, it comes with a minimal number of initial bad blocks during production or out-of-factory as there is no currently known technology that produce flash chips free of bad blocks. In addition, bad blocks may develop during program/erase cycles. Since bad blocks are inevitable, the solution is to keep them in control. Apacer flash devices are programmed with ECC, page mapping technique and S.M.A.R.T to reduce invalidity or error. Once bad blocks are detected, data in those blocks will be transferred to free blocks and error will be corrected by designated algorithms.

5.3 Global Wear Leveling

Flash memory devices differ from Hard Disk Drives (HDDs) in terms of how blocks are utilized. For HDDs, when a change is made to stored data, like erase or update, the controller mechanism on HDDs will perform overwrites on blocks. Unlike HDDs, flash blocks cannot be overwritten and each P/E cycle wears down the lifespan of blocks gradually. Repeatedly program/erase cycles performed on the same memory cells will eventually cause some blocks to age faster than others. This would bring flash storages to their end of service term sooner. Global wear leveling is an important mechanism that levels out the wearing of all blocks so that the wearing-down of all blocks can be almost evenly distributed. This will increase the lifespan of SSDs.

5.4 Flash Translation Layer – Page Mapping

Page mapping is an advanced flash management technology whose essence lies in the ability to gather data, distribute the data into flash pages automatically, and then schedule the data to be evenly written. Page-level mapping uses one page as the unit of mapping. The most important characteristic is that each logical page can be mapped to any physical page on the flash memory device. This mapping algorithm allows different sizes of data to be written to a block as if the data is written to a data pool and it does not need to take extra operations to process a write command. Thus, page mapping is adopted to increase random access speed and improve SSD lifespan, reduce block erase frequency, and achieve optimized performance and lifespan.

5.5 ATA Secure Erase

ATA Secure Erase is an ATA disk purging command currently embedded in most of the storage drives. Defined in ATA specifications, (ATA) Secure Erase is part of Security Feature Set that allows storage drives to erase all user data areas. The erase process usually runs on the firmware level as most of the ATA-based storage media currently in the market are built-in with this command. ATA Secure Erase can securely wipe out the user data in the drive and protects it from malicious attack.

© 2024 Apacer Technology Inc.

5.6 Power Failure Management

Power Failure Management plays a crucial role when power supply becomes unstable. Power disruption may occur when users are storing data into the SSD, leading to instability in the drive. However, with Power Failure Management, a firmware protection mechanism will be activated to scan pages and blocks once power is resumed. Valid data will be transferred to new blocks for merging and the mapping table will be rebuilt. Therefore, data reliability can be reinforced, preventing damage to data stored in the NAND Flash.

Note: The controller unit of this product model is designed with a DRAM as a write cache for improved performance and data efficiency. Though unlikely to happen in most cases, the data cached in the volatile DRAM might be potentially affected if a sudden power loss takes place before the cached data is flushed into non-volatile NAND flash memory.

5.7 TRIM

TRIM is a SATA command that helps improve the read/write performance and efficiency of solid-state drives (SSD). The command enables the host operating system to inform SSD controller which blocks contain invalid data, mostly because of the erase commands from host. The invalid will be discarded permanently and the SSD will retain more space for itself.

5.8 Device Sleep (DevSleep or DEVSLP) Mode (optional)

Device Sleep is a feature that allows SATA devices to enter a low power mode by designating a particular pin as DEVSLP signal with an aim to reducing power consumption.

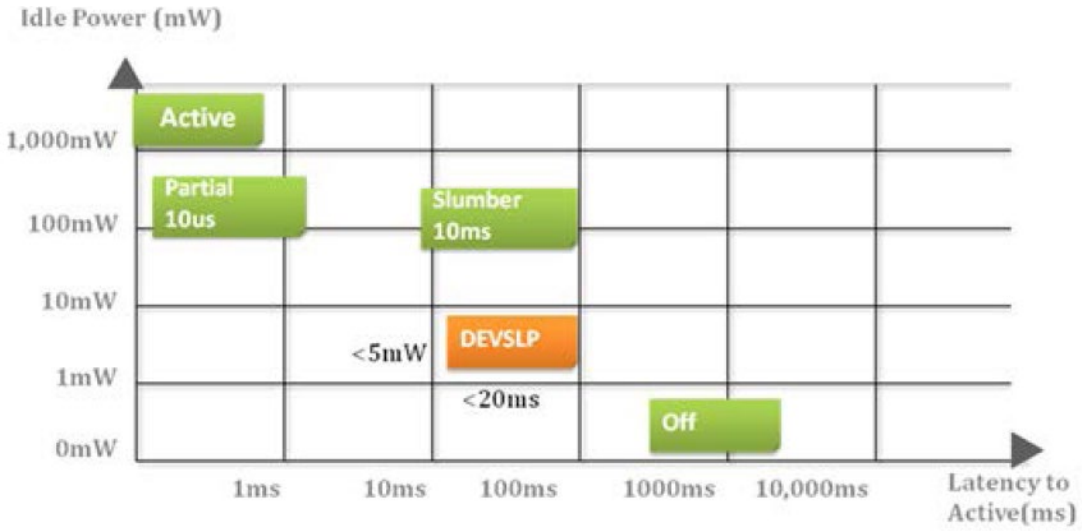

Figure 5-1 Device Sleep

5.9 SMART Read Refresh™

Apacer's SMART Read Refresh plays a proactive role in avoiding read disturb errors from occurring to ensure health status of all blocks of NAND flash. Developed for read-intensive applications in particular, SMART Read Refresh is employed to make sure that during read operations, when the read operation threshold is reached, the data is refreshed by re-writing it to a different block for subsequent use.

© 2024 Apacer Technology Inc.

5.10 SATA Power Management

By complying with SATA 6 Gb/s specifications, the SSD supports the following SATA power saving modes:

- ACTIVE: PHY ready, full power, TX & RX operational
- PARTIAL: Reduces power, resumes in under 10 µs (microseconds)
- SLUMBER: Reduces power, resumes in under 10 ms (milliseconds)
- HIPM: Host-Initiated Power Management
- DIPM: Device-Initiated Power Management
- AUTO-SLUMBER: Automatic transition from partial to slumber.
- Device Sleep (DevSleep or DEVSLP): PHY powered down; power consumption ≦ 5 mW; host assertion time ≦ 10 ms; exit timeout from this state ≦ 20 ms (unless specified otherwise in SATA Identify Device Log).

Notes:
1. The behaviors of power management features would depend on host/device settings.
2. Device Sleep mode is optional, depending on product ordering selections.

© 2024 Apacer Technology Inc.

6. Reliability Features

6.1 Thermal Sensor

Apacer Thermal Sensor is a digital temperature sensor with serial interface. By using designated pins for transmission, storage device owners are able to read temperature data.

6.2 Thermal Throttling (optional)

Thermal throttling can monitor the temperature of the SSD equipped with a built-in thermal sensor via S.M.A.R.T. commands. This method can ensure the temperature of the device stays within temperature limits by drive throttling, i.e. reducing the speed of the drive when the device temperature reaches the threshold level, so as to prevent overheating, guarantee data reliability, and prolong product lifespan. When the temperature exceeds the maximum threshold level, thermal throttling will be triggered to reduce performance step by step to prevent hardware components from being damaged. Performance is only permitted to drop to the extent necessary for recovering a stable temperature to cool down the device's temperature. Once the temperature decreases to the minimum threshold value, transfer speeds will rise back to its optimum performance level.

© 2024 Apacer Technology Inc.

7. Software Interface

7.1 Command Set

This section defines the software requirements and the format of the commands the host sends to SS220-M242. Commands are issued to SS220-M242 by loading the required registers in the command block with the supplied parameters, and then writing the command code to the Command register.

Table 7-1 Command Set

Code	Command	Code	Command
E5h	CHECK POWER MODE	F4h	SECURITY ERASE UNIT
06h	DATA SET MANAGEMENT	F5h	SECURITY FREEZE LOCK
92h	DOWNLOAD MICROCODE	F1h	SECURITY SET PASSWORD
90h	EXECUTE DEVICE DIAGNOSTIC	F2h	SECURITY UNLOCK
E7h	FLUSH CACHE	70h	SEEK
EAh	FLUSH CACHE EXT	EFh	SET FEATURES
ECh	IDENTIFY DEVICE	C6h	SET MULTIPLE MODE
E3h	IDLE	E6h	SLEEP
E1h	IDLE IMMEDIATE	B0h	SMART
91h	INITIALIZE DEVICE PARAMETERS	E2h	STANDBY
E4h	READ BUFFER	E0h	STANDBY IMMEDIATE
C8h	READ DMA	E8h	WRITE BUFFER
25h	READ DMA EXT	CAh	WRITE DMA
60h	READ FPDMA QUEUED	35h	WRITE DMA EXT
C4h	READ MULTIPLE	3Dh	WRITE DMA FUA EXT
29h	READ MULTIPLE EXT	61h	WRITE FPDMA QUEUED
2Fh	READ LOG EXT	3Fh	WRITE LOG EXT
47h	READ LOG DMA EXT	57h	WRITE LOG DMA EXT
20h	READ SECTOR	C5h	WRITE MULTIPLE
24h	READ SECTOR EXT	39h	WRITE MULTIPLE EXT
40h	READ VERIFY SECTORS	CEh	WRITE MULTIPLE FUA EXT
42h	READ VERIFY SECTORS EXT	30h	WRITE SECTOR
10h	RECALIBRATE	34h	WRITE SECTOR EXT
F6h	SECURITY DISABLE PASSWORD	45h	WRITE UNCORRECTABLE EXT
F3h	SECURITY ERASE PREPARE		

© 2024 Apacer Technology Inc.

7.2 S.M.A.R.T.

SMART, an acronym for Self-Monitoring, Analysis and Reporting Technology, is an open standard that allows a hard disk drive to automatically detect its health and report potential failures. When a failure is recorded by SMART, users can choose to replace the drive to prevent unexpected outage or data loss. Moreover, SMART can inform users of impending failures while there is still time to perform proactive actions, such as copy data to another device.

Table 7-2 SMART Subcommand Set

Code	SMART Subcommand
D0h	READ DATA
D1h	READ ATTRIBUTE THRESHOLDS
D2h	ENABLE/DISABLE ATTRIBUTE AUTOSAVE
D4h	EXECUTE OFF-LINE IMMEDIATE
D5h	SMART READ LOG
D6h	SMART WRITE LOG
D8h	ENABLE OPERATIONS
D9h	DISABLE OPERATIONS
DAh	RETURN STATUS

Table 7-3 General SMART Attribute Structure

Byte	Description
0	ID (Hex)
1 – 2	Status Flag
3	Value
4	Worst
5*-11	Raw Data

*Byte 5: LSB

Table 7-4 SMART Attribute ID List

ID (Hex)	Attribute Name
9 (0x09)	Power-on Hours
12 (0x0C)	Power Cycle Count
163 (0xA3)	Maximum Erase Count
164 (0xA4)	Average Erase Count
166 (0xA6)	Total Later Bad Block Count
167 (0xA7)	SSD Protect Mode (Vendor Specific)
168 (0xA8)	SATA PHY Error Count
171 (0xAB)	Program Fail Count
172 (0xAC)	Erase Fail Count
175 (0xAF)	Bad Cluster Table Count
192 (0xC0)	Unexpected Power Loss Count
194 (0xC2)	Temperature
231 (0xE7)	Lifetime Left
241 (0xF1)	Total Sectors of Write

© 2024 Apacer Technology Inc.

8. Electrical Specifications

8.1 Operating Voltage

Table 8-1 lists the supply voltage for SS220-M242.

Caution: **Absolute Maximum Stress Ratings –** Applied conditions greater than those listed under "Absolute Maximum Stress Ratings" may cause permanent damage to the device. This is a stress rating only and functional operation of the device at these conditions or conditions greater than those defined in the operational sections of this data sheet is not implied. Exposure to absolute maximum stress rating conditions may affect device reliability.

Table 8-1 Operating Range

Item	Range
Supply Voltage	3.3V ± 5% (3.135-3.465V)

8.2 Power Consumption

Table 7-2 lists the power consumption for SS220-M242.

Table 8-2 Power Consumption

Capacity / Mode	Unit	1 GB	2 GB	4 GB	8 GB	16 GB	32 GB	64 GB
Active (Max.)	mA	185	210	265	210	245	260	520
Idle		80	80	75	85	85	80	75

Notes:
- All values are typical and may vary depending on flash configurations or host system settings.
- Power consumption is measured using CrystalDiskMark 5.2.1 with file size 1,000MB.

© 2024 Apacer Technology Inc.

9. Mechanical Specifications

Table 9-1 Physical Dimensions

Parameter	Unit	1 GB	2 GB	4 GB	8 GB	16 GB	32 GB	64 GB
Length	mm	42.00 ± 0.15						
Width		22.00 ± 0.15						
Height (Max.)		3.88						

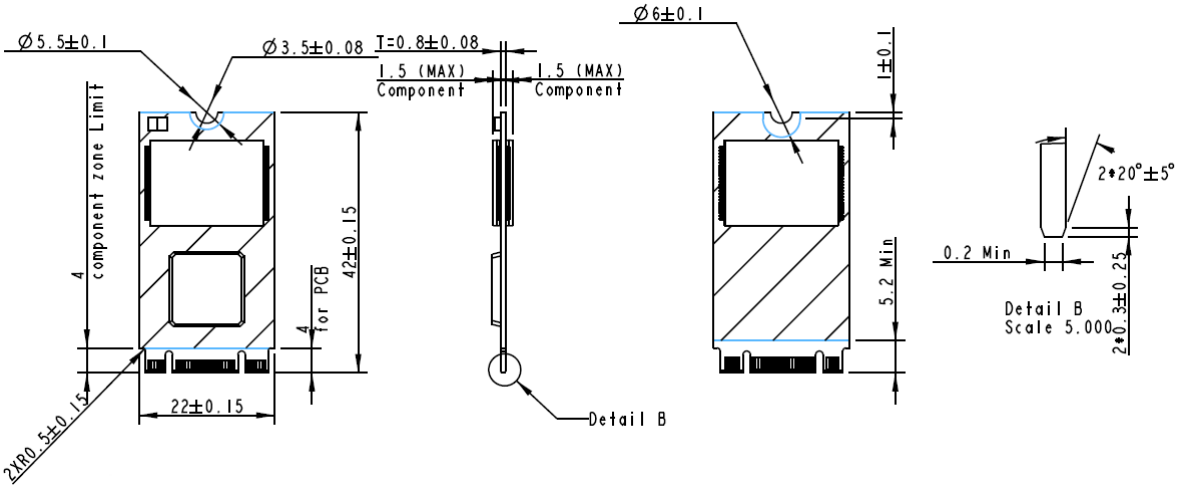

Figure 9-1 Physical Dimensions

© 2024 Apacer Technology Inc.

10. Product Ordering Information

10.1 Product Code Designations

AP M2 T42 SS22 xxxG XN – 7X TX X

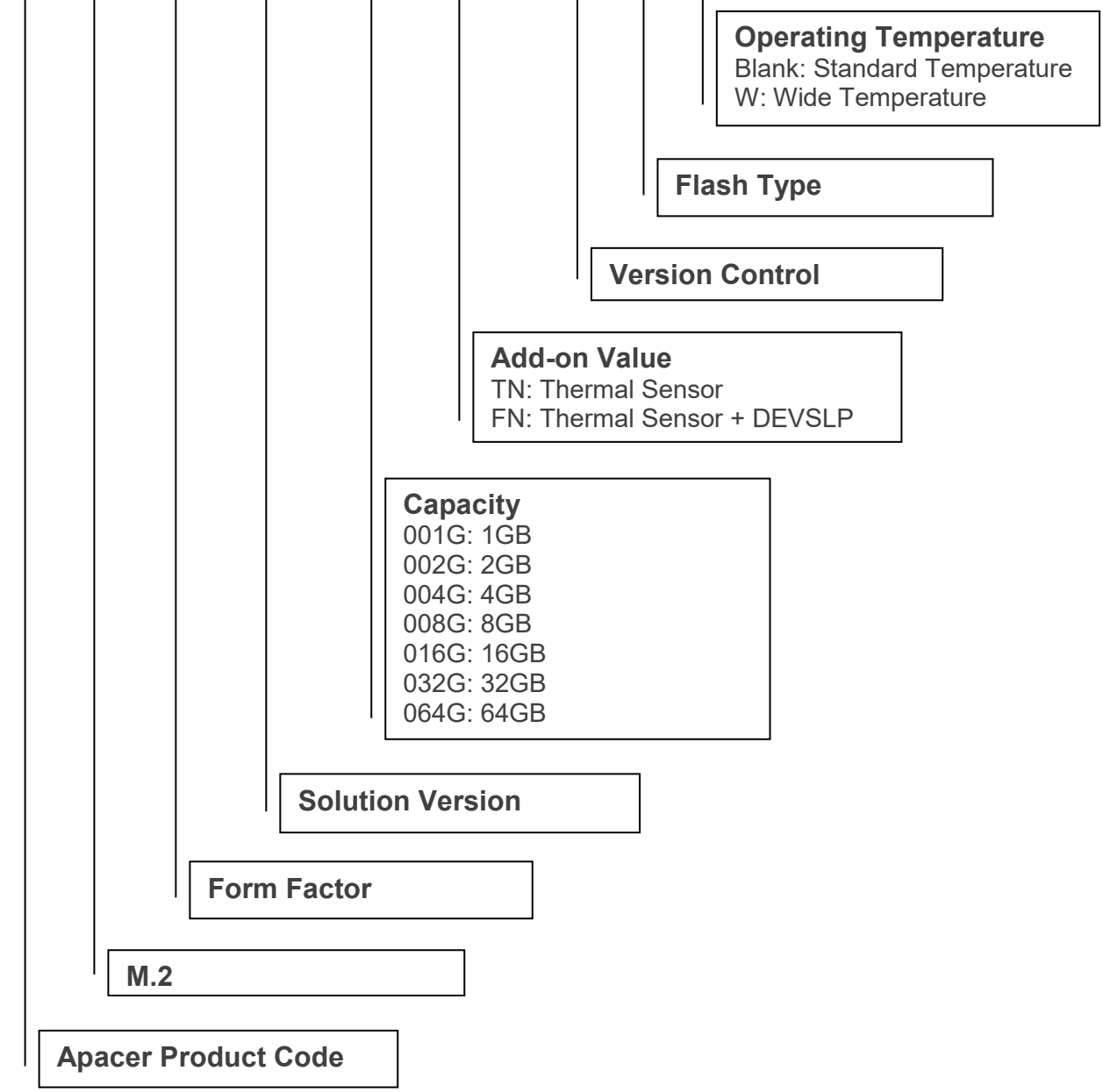

© 2024 Apacer Technology Inc.

10.2 Valid Combinations

The following tables list the available model of the SS220-M242 series which are in mass production or will be in mass production. Consult your Apacer sales representative to confirm availability of valid combinations and to determine availability of new combinations.

10.2.1 Without DEVSLP

Capacity	Standard Temperature	Wide Temperature
1GB	APM2T42SS22001GTN-7ET	APM2T42SS22001GTN-7ETW
2GB	APM2T42SS22002GTN-7ET	APM2T42SS22002GTN-7ETW
4GB	APM2T42SS22004GTN-7ET	APM2T42SS22004GTN-7ETW
8GB	APM2T42SS22008GTN-7ET	APM2T42SS22008GTN-7ETW
16GB	APM2T42SS22016GTN-7ET	APM2T42SS22016GTN-7ETW
32GB	APM2T42SS22032GTN-7ET	APM2T42SS22032GTN-7ETW
64GB	APM2T42SS22064GTN-7ETG	APM2T42SS22064GTN-7ETGW

10.2.2 With DEVSLP (optional)

Capacity	Standard Temperature	Wide Temperature
1GB	APM2T42SS22001GFN-7FT	APM2T42SS22001GFN-7FTW
2GB	APM2T42SS22002GFN-7FT	APM2T42SS22002GFN-7FTW
4GB	APM2T42SS22004GFN-7FT	APM2T42SS22004GFN-7FTW
8GB	APM2T42SS22008GFN-7FT	APM2T42SS22008GFN-7FTW
16GB	APM2T42SS22016GFN-7FT	APM2T42SS22016GFN-7FTW
32GB	APM2T42SS22032GFN-7FT	APM2T42SS22032GFN-7FTW
64GB	APM2T42SS22064GFN-7FTG	APM2T42SS22064GFN-7FTGW

© 2024 Apacer Technology Inc.

Revision History

Revision	Description	Date
1.0	Official release	12/26/2019
1.1	- Added SMART Read Refresh to Flash Management on Specifications Overview page - Changed SATA 6.0 Gbps to SATA 6 Gb/s in accordance with SATA naming guidelines - Added 5.9 SMART Read Refresh - Capitalized every letter for commands at 7.1 Command Set and SMART subcommand at 7.2 S.M.A.R.T.	5/15/2020
1.2	Modified valid combinations at 10.2.2 With DEVSLP (optional)	5/17/2021
1.3	- Updated MTBF to >3,000,000 hours on Specifications Overview and 4.4 Mean Time Between Failures (MTBF) - Updated storage temp to -55°C to 100°C on Specifications Overview and Table 4-3 Environmental Specifications - Updated form factor to D5 at Physical Characteristics on Specifications Overview - Corrected pin description of pin 8 to “No connect” - Added UKCA to 4.5 Certification and Compliance - Updated Table 7-1 Command Set - Updated 10. Product Ordering Information due to firmware change	3/4/2024

© 2024 Apacer Technology Inc.

Global Presence

Taiwan (Headquarters)
Apacer Technology Inc.
1F., No.32, Zhongcheng Rd., Tucheng Dist.,
New Taipei City 236, Taiwan R.O.C.
Tel: 886-2-2267-8000
Fax: 886-2-2267-2261
amtsales@apacer.com

U.S.A.
Apacer Memory America, Inc.
46732 Lakeview Blvd., Fremont, CA 94538
Tel: 1-408-518-8699
Fax: 1-510-249-9551
sa@apacerus.com

Japan
Apacer Technology Corp.
6F, Daiyontamachi Bldg., 2-17-12, Shibaura, Minato-Ku,
Tokyo, 108-0023, Japan
Tel: 81-3-5419-2668
Fax: 81-3-5419-0018
jpservices@apacer.com

Europe
Apacer Technology B.V.
Science Park Eindhoven 5051 5692 EB Son,
The Netherlands
Tel: 31-40-267-0000
Fax: 31-40-290-0686
sales@apacer.nl

China
Apacer Electronic (Shanghai) Co., Ltd
Room D, 22/FL, No.2, Lane 600, JieyunPlaza,
Tianshan RD, Shanghai, 200051, China
Tel: 86-21-6228-9939
Fax: 86-21-6228-9936
sales@apacer.com.cn

India
Apacer Technologies Pvt Ltd,
1874, South End C Cross, 9th Block Jayanagar,
Bangalore-560069, India
Tel: 91-80-4152-9061/62
Fax: 91-80-4170-0215
sales_india@apacer.com

© 2024 Apacer Technology Inc.