Apacer

RoHS Compliant

Serial ATA Flash Drive

SM210-18 Product Specifications (Toshiba 15nm)

January 22, 2018

Version 1.2

Apacer Technology Inc.
1F, No.32, Zhongcheng Rd., Tucheng Dist., New Taipei City, Taiwan, R.O.C
Tel: +886-2-2267-8000 Fax: +886-2-2267-2261
www.apacer.com

Apacer

Features:

- **Compliance with SATA Revision 3.1**
  - SATA 6.0 Gbps interface
  - Backward compatible with SATA 1.5 and 3.0 Gbps interfaces
  - ATA-8 command set
- **Capacity**
  - 32, 64, 128, 256, 512 GB
- **Performance***
  - Burst read/write: 600 MB/sec
  - Sequential read: Up to 505 MB/sec
  - Sequential write: Up to 355 MB/sec
  - Seq. read QD32: Up to 540 MB/sec
  - Seq. write QD32: Up to 355 MB/sec
  - Random read (4K): Up to 82,000 IOPS
  - Random write (4K): Up to 77,000 IOPS
- **Flash Management**
  - Built-in hardware ECC
  - Global Wear Leveling
  - Flash bad-block management
  - S.M.A.R.T.
  - Power Failure Management
  - ATA Secure Erase
  - TRIM
- **DRAM Cache for Enhanced Random Performance**
- **SATA Power Management Mode**
- **NAND Flash Type:** MLC
- **MTBF:** >1,000,000 hours
- **Temperature Range**
  - Operating:
    Standard: 0°C to 70°C
    Extended: -40°C to 85°C
  - Storage: -40°C to 100°C
- **Supply Voltage**
  - 3.3V & 5V
- **Power Consumption***

  @3.3V
  - Active mode: 755 mA
  - Idle mode: 135 mA

  @5V
  - Active mode: 655 mA
  - Idle mode: 75 mA
- **Form Factor**
  - 1.8 inch
  - Dimensions: 78.50 x 54.00 x 5.00, unit: mm
- **Connector Type**
  - 7-pin SATA male connector
  - 9-pin SATA power connector
- **Shock & Vibration****
  - Shock:1,500 G
  - Vibration: 15 G
- **Device Sleep Mode (optional)**
- **RoHS Compliant**

*Varies from capacities. The values for performances and power consumptions presented are typical and may vary depending on flash configurations or platform settings. The term idle refers to the standby state of the device.
**Non-operating

© 2018 Apacer Technology Inc.

Table of Contents

1. General Descriptions 3

1.1 Introduction 3
1.2 Capacity Specifications 3
1.3 Performance 3
1.4 Pin Assignments 4

2. Software Interface 6

2.1 Command Set 6
2.2 S.M.A.R.T. 6

3. Flash Management 8

3.1 Error Correction/Detection 8
3.2 Bad Block Management 8
3.3 Global Wear Leveling 8
3.4 Power Failure Management 8
3.5 ATA Secure Erase 8
3.6 TRIM 9
3.7 SATA Power Management 9

4. Reliability Specifications 10

4.1 Environmental Specifications 10
4.2 Mean Time Between Failures (MTBF) 10
4.3 Certification and Compliance 10

5. Electrical Specifications 11

5.1 Operating Voltage 11
5.2 Power Consumption 11

6. Physical Characteristics 12

7. Product Ordering Information 13

7.1 Product Code Designations 13
7.2 Valid Combinations 14

© 2018 Apacer Technology Inc.

1. General Descriptions

1.1 Introduction

Apacer's SM210-18 is a well-balanced solid-state disk (SSD) drive with standard form factor and great performance. Designed in SATA 6.0 Gbps interface, the SSD is able to deliver exceptional read/write speed, making it the ideal companion for heavy-loading industrial or server operations. In regard of reliability, the drive comes with various implementations including powerful hardware ECC engine, power saving modes, wear leveling, flash block management, S.M.A.R.T., TRIM, and power failure management.

1.2 Capacity Specifications

Capacity specifications of SM210-18 are available as shown in Table 1-1. It lists the specific capacity and the default numbers of heads, sectors and cylinders for each product line.

Table 1-1 Capacity Specifications

Capacity	Total bytes*	Cylinders	Heads	Sectors	Max LBA
32 GB	32,017,047,552	16,383	16	63	62,533,296
64 GB	64,023,257,088	16,383	16	63	125,045,424
128 GB	128,035,676,160	16,383	16	63	250,069,680
256 GB	256,060,514,304	16,383	16	63	500,118,192
512 GB	512,110,190,592	16,383	16	63	1,000,215,216

*Display of total bytes varies from file systems, which means not all of the bytes can be used for storage.
**Notes: 1 GB = 1,000,000,000 bytes; 1 sector = 512 bytes.
LBA count addressed in the table above indicates total user storage capacity and will remain the same throughout the lifespan of the device. However, the total usable capacity of the SSD is most likely to be less than the total physical capacity because a small portion of the capacity is reserved for device maintenance usages.

1.3 Performance

Performance of SM210-18 is listed below in Table 1-2.

Table 1-2 Performance Specifications

Capacity / Performance	32 GB	64 GB	128 GB	256 GB	512GB
Sequential Read* (MB/s)	340	365	480	480	505
Sequential Write* (MB/s)	100	90	180	350	355
Seq. Read QD32* (MB/s)	360	385	520	520	540
Seq. Write QD32* (MB/s)	100	90	180	350	355
Random Read IOPS (4K)**	48,000	45,000	75,000	78,000	82,000
Random Write IOPS (4K)**	22,000	22,000	44,000	77,000	72,000

Note:
Results may differ from various flash configurations or host system setting.
*Sequential performance is based on CrystalDiskMark 5.2.1 with file size 1,000MB.
**Random performance measured using IOMeter with Queue Depth 32.

© 2018 Apacer Technology Inc.

1.4 Pin Assignments

Table 1-3 describes SM210-18 signal segment, and Table1-4, its power segment.

Figure 1-1 Micro-SATA Connectors

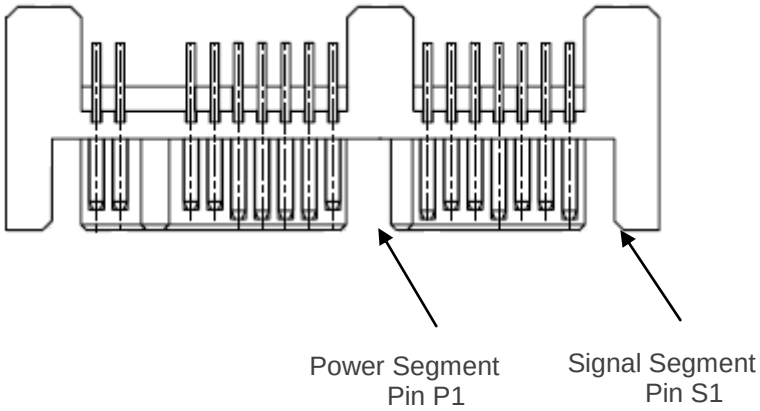

Table 1-3 Signal Segment

Name	Type	Description
S1	GND	
S2	RxP	+ Differential Receive Signal
S3	RxN	- Differential Receive Signal
S4	GND	
S5	TxN	- Differential Transmit Signal
S6	TxP	+ Differential Transmit Signal
S7	GND	

Table 1-4 Power Segment

Pin	Type	Signal/Description
P1	V33	3.3 V Power
P2	V33	3.3 V Power
P3	GND	
P4	GND	
P5	V5	5 V Power
P6	V5	5 V Power
P7	GND	Reserved
P8	Optional	NC
P9	Optional	DEVSLP

© 2018 Apacer Technology Inc.

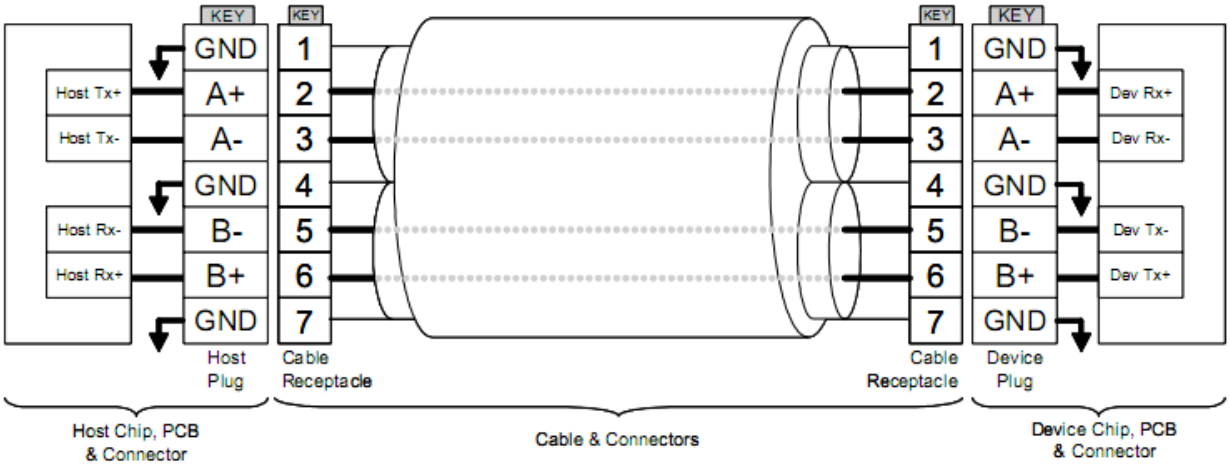

Figure 1-2 SATA Cable/Connector Connection Diagram

The connector on the left represents the Host with TX/RX differential pairs connected to a cable. The connector on the right shows the Device with TX/RX differential pairs also connected to the cable. Notice also the ground path connecting the shielding of the cable to the Cable Receptacle.

© 2018 Apacer Technology Inc.

2. Software Interface

2.1 Command Set

Table 2-1 summarizes the ATA commands supported by SM210-18.

Table 2-1 Command Set

Code	Command	Code	Command
E5h	Check Power Mode	F6h	Security Disable Password
90h	Execute Diagnostics	F3h	Security Erase Prepare
E7h	Flush Cache	F4h	Security Erase Unit
ECh	Identify Device	F5h	Security Freeze Lock
E3h	Idle	F1h	Security Set Password
E1h	Idle Immediate	F2h	Security Unlock
91h	Initialize Device Parameters	7Xh	Seek
C8h	Read DMA	EFh	Set Features
25h	Read DMA EXT	C6h	Set Multiple Mode
60h	Read FPDMA Queued	E6h	Sleep
47h	Read Log DMA EXT	B0h	S.M.A.R.T.
2Fh	Read Log EXT	E2h	Standby
C4h	Read Multiple	E0h	Standby Immediate
20 or 21h	Read Sector(s)	CAh	Write DMA
40 or 41h	Read Verify Sector(s)	35h	Write DMA EXT
10h	Recalibrate	61h	Write FPDMA Queued
57h	Write Log DMA EXT	3Fh	Write Log EXT
C5h	Write Multiple	30h or 31h	Write Sector(s)

2.2 S.M.A.R.T.

S.M.A.R.T. is an abbreviation for Self-Monitoring, Analysis and Reporting Technology, a self-monitoring system that provides indicators of drive health as well as potential disk problems. It serves as a warning for users from unscheduled downtime by monitoring and displaying critical drive information. Ideally, this should allow taking proactive actions to prevent drive failure and make use of S.M.A.R.T. information for future product development reference.

Apacer devices use the standard SMART command B0h to read data out from the drive to activate our S.M.A.R.T. feature that complies with the ATA/ATAPI specifications. S.M.A.R.T. Attribute IDs shall include initial bad block count, total later bad block count, maximum erase count, average erase count, power on hours and power cycle. When the S.M.A.R.T. Utility running on the host, it analyzes and reports the disk status to the host before the device reaches in critical condition.

Note: Attribute IDs may vary from product models due to various solution design and supporting capabilities.

© 2018 Apacer Technology Inc.

Apacer memory products come with S.M.A.R.T. commands and subcommands for users to obtain information of drive status and to predict potential drive failures. Users can take advantage of the following commands/subcommands to monitor the health of the drive.

Code	SMART Subcommand
D0h	READ DATA
D1h	READ ATTRIBUTE THRESHOLDS
D2h	Enable/Disable Attribute Autosave
D4h	Execute Off-line Immediate
D5h	Read Log (optional)
D6h	Write Log (optional)
D8h	Enable Operations
D9h	Disable operations
DAh	Return Status

General SMART attribute structure

Byte	Description
0	ID (Hex)
1 – 2	Status flag
3	Value
4	Worst
5*-11	Raw Data

*Byte 5: LSB

SMART attribute ID list

ID (Hex)	Attribute Name
9 (0x09)	Power-on hours
12 (0x0C)	Power cycle count
163 (0xA3)	Max. erase count
164 (0xA4)	Avg. erase count
166 (0xA6)	Total later bad block count
167 (0xA7)	SSD Protect Mode (vendor specific)
168 (0xA8)	SATA PHY Error Count
175 (0xAF)	Bad Cluster Table Count
192 (0xC0)	Unexpected Power Loss Count
194 (0xC2)	Temperature
241 (0xF1)	Total sectors of write

© 2018 Apacer Technology Inc.

3. Flash Management

3.1 Error Correction/Detection

SM210-18 implements a hardware ECC scheme, based on the BCH algorithm. It can detect and correct up to 72 bit error in 1K bytes.

3.2 Bad Block Management

Current production technology is unable to guarantee total reliability of NAND flash memory array. When a flash memory device leaves factory, it comes with a minimal number of initial bad blocks during production or out-of-factory as there is no currently known technology that produce flash chips free of bad blocks. In addition, bad blocks may develop during program/erase cycles. When host performs program/erase command on a block, bad block may appear in Status Register. Since bad blocks are inevitable, the solution is to keep them in control. Apacer flash devices are programmed with ECC, page mapping technique and S.M.A.R.T to reduce invalidity or error. Once bad blocks are detected, data in those blocks will be transferred to free blocks and error will be corrected by designated algorithms.

3.3 Global Wear Leveling

Flash memory devices differ from Hard Disk Drives (HDDs) in terms of how blocks are utilized. For HDDs, when a change is made to stored data, like erase or update, the controller mechanism on HDDs will perform overwrites on blocks. Unlike HDDs, flash blocks cannot be overwritten and each P/E cycle wears down the lifespan of blocks gradually. Repeatedly program/erase cycles performed on the same memory cells will eventually cause some blocks to age faster than others. This would bring flash storages to their end of service term sooner. Global wear leveling is an important mechanism that levels out the wearing of all blocks so that the wearing-down of all blocks can be almost evenly distributed. This will increase the lifespan of SSDs.

3.4 Power Failure Management

Power Failure Management plays a crucial role when experiencing unstable power supply. Power disruption may occur when users are storing data into the SSD. In this urgent situation, the controller would run multiple write-to-flash cycles to store the metadata for later block rebuilding. This urgent operation requires about several milliseconds to get it done. At the next power up, the firmware will perform a status tracking to retrieve the mapping table and resume previously programmed NAND blocks to check if there is any incompleteness of transmission.

Note: The controller unit of this product model is designed with a DRAM as a write cache for improved performance and data efficiency. Though unlikely to happen in most cases, the data cached in the volatile DRAM might be potentially affected if a sudden power loss takes place before the cached data is flushed into non-volatile NAND flash memory.

3.5 ATA Secure Erase

ATA Secure Erase is an ATA disk purging command currently embedded in most of the storage drives. Defined in ATA specifications, (ATA) Secure Erase is part of Security Feature Set that allows storage drives to erase all user data areas. The erase process usually runs on the firmware level as most of the ATA-based storage media currently in the market are built-in with this command. ATA Secure Erase can securely wipe out the user data in the drive and protects it from malicious attack.

© 2018 Apacer Technology Inc.

3.6 TRIM

TRIM is a SATA command that helps improve the read/write performance and efficiency of solid-state drives (SSD). The command enables the host operating system to inform SSD controller which blocks contain invalid data, mostly because of the erase commands from host. The invalid will be discarded permanently and the SSD will retain more space for itself.

3.7 SATA Power Management

By complying with SATA 6.0 Gb/s specifications, the SSD supports the following SATA power saving modes:

- ACTIVE: PHY ready, full power, Tx & Rx operational
- PARTIAL: Reduces power, resumes in under 10 µs (microseconds)
- SLUMBER: Reduces power, resumes in under 10 ms (milliseconds)
- HIPM: Host-Initiated Power Management
- DIPM: Device-Initiated Power Management
- AUTO-SLUMBER: Automatic transition from partial to slumber.

Note:
1. The behaviors of power management features would depend on host/device settings.
2. Device Sleep mode is optional, depending on product ordering selections.

© 2018 Apacer Technology Inc.

4. Reliability Specifications

4.1 Environmental Specifications

Environmental specifications of SM210-18 product are shown in Table 4-1.

Table 4-1 Environmental Specifications

Environment	Specifications
Temperature	0°C to 70°C (Operating); -40°C to 85°C (Extended)
	-40°C to 100°C (Non-operating)
Vibration	Non-operating: Sine wave, 15(G), 10~2000(Hz), Operating: Random, 7.69(Grms), 20~2000(Hz)
Shock	Non-operating: Acceleration, 1,500 G, 0.5 ms Operating: Peak acceleration, 50 G, 11 ms

4.2 Mean Time Between Failures (MTBF)

Mean Time Between Failures (MTBF) is predicted based on reliability data for the individual components in SM210-18. The prediction result for SM210-18 is more than 1,000,000 hours.

Note: The MTBF is predicated and calculated based on “Telcordia Technologies Special Report, SR-332, Issue 2” method.

4.3 Certification and Compliance

SM210-18 complies with the following standards:

- CE
- FCC
- RoHS Recast
- MIL-STD-810F

© 2018 Apacer Technology Inc.

5. Electrical Specifications

5.1 Operating Voltage

Table 5-1 lists the supply voltage for SM210-18.

Table 5-1 Operating Voltage

Item	Range
Supply Voltage	3.3V ± 5% (3.135-3.465V) 5V ± 5% (4.75-5.25V)

5.2 Power Consumption

Table 5-2 lists the power consumption for SM210-18.

Table 5-2 Power Consumption@ 3.3V

Capacity / Mode	32 GB	64 GB	128 GB	256 GB	512 GB
Active (mA)	330	360	480	735	755
Idle (mA)	130	130	135	135	135

Table 5-3 Power Consumption@ 5V

Capacity / Mode	32 GB	64 GB	128 GB	256 GB	512 GB
Active (mA)	215	230	310	500	655
Idle (mA)	70	70	70	75	75

Note:
*All values are typical and may vary depending on flash configurations or host system settings.
**Active power is an average power measurement performed using CrystalDiskMark with 128KB sequential read/write transfers.

© 2018 Apacer Technology Inc.

6. Physical Characteristics

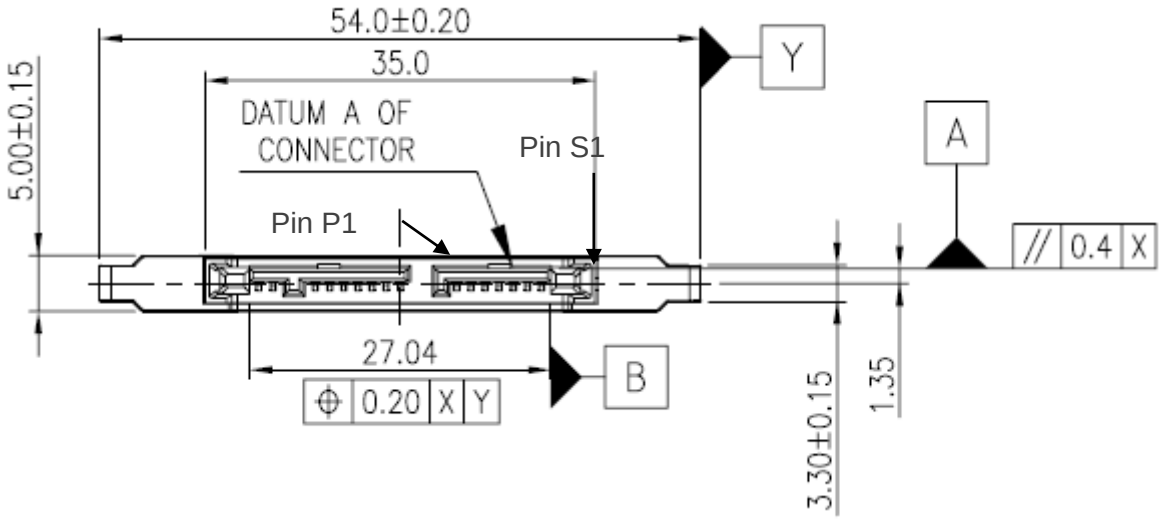

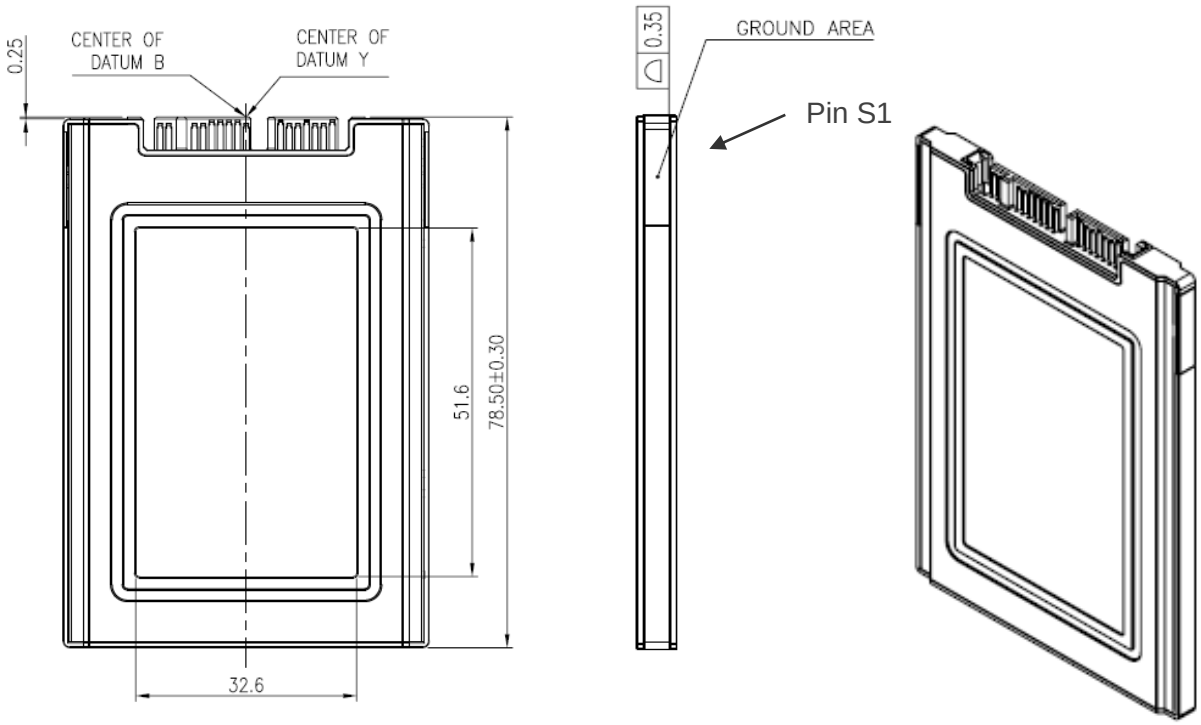

Unit: mm
Tolerance: ± 0.2

© 2018 Apacer Technology Inc.

7. Product Ordering Information

7.1 Product Code Designations

AP S 18A X A xxxG – XX TM1G X X

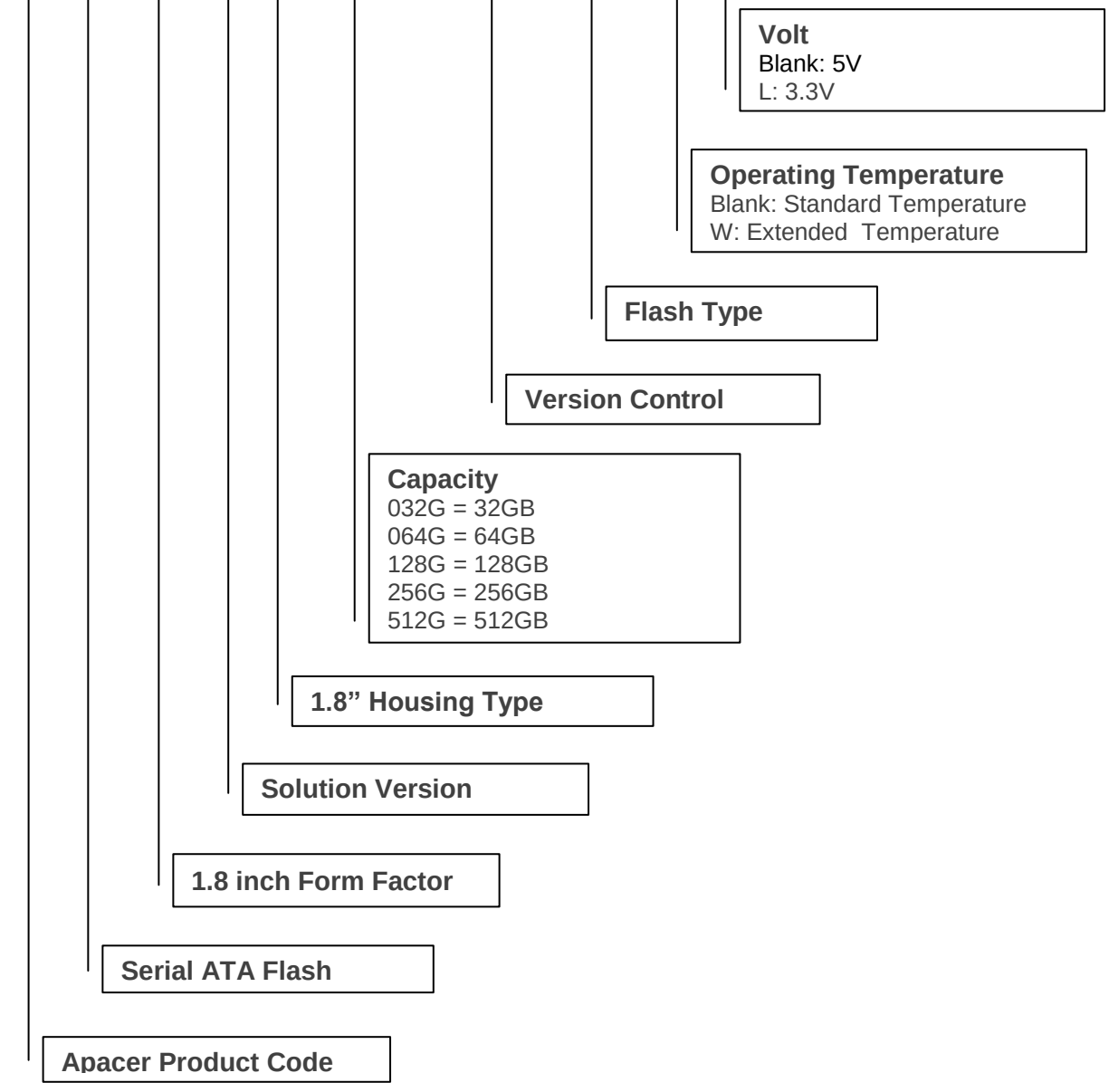

© 2018 Apacer Technology Inc.

7.2 Valid Combinations

7.2.1 3.3V / Operating Temperature (0°C ~ 70°C)

Capacity	No DEVSLP	DEVSLP
32GB	APS18AFA032G-4ATM1GL	APS18AFA032G-4BTM1GL
64GB	APS18AFA064G-4ATM1GL	APS18AFA064G-4BTM1GL
128GB	APS18AFA128G-4ATM1GL	APS18AFA128G-4BTM1GL
256GB	APS18AFA256G-4ATM1GL	APS18AFA256G-4BTM1GL
512GB	APS18AFA512G-4ATM1GL	APS18AFA512G-4BTM1GL

7.2.2 3.3V / Operating Temperature (-40°C ~ 85°C)

Capacity	No DEVSLP	DEVSLP
32GB	APS18AFA032G-4ATM1GWL	APS18AFA032G-4BTM1GWL
64GB	APS18AFA064G-4ATM1GWL	APS18AFA064G-4BTM1GWL
128GB	APS18AFA128G-4ATM1GWL	APS18AFA128G-4BTM1GWL
256GB	APS18AFA256G-4ATM1GWL	APS18AFA256G-4BTM1GWL
512GB	APS18AFA512G-4ATM1GWL	APS18AFA512G-4BTM1GWL

7.2.3 5V / Operating Temperature (0°C ~ 70°C)

Capacity	No DEVSLP	DEVSLP
32GB	APS18AFA032G-4ATM1G	APS18AFA032G-4BTM1G
64GB	APS18AFA064G-4ATM1G	APS18AFA064G-4BTM1G
128GB	APS18AFA128G-4ATM1G	APS18AFA128G-4BTM1G
256GB	APS18AFA256G-4ATM1G	APS18AFA256G-4BTM1G
512GB	APS18AFA512G-4ATM1G	APS18AFA512G-4BTM1G

7.2.4 5V / Operating Temperature (-40°C ~ 85°C)

Capacity	No DEVSLP	DEVSLP
32GB	APS18AFA032G-4ATM1GW	APS18AFA032G-4BTM1GW
64GB	APS18AFA064G-4ATM1GW	APS18AFA064G-4BTM1GW
128GB	APS18AFA128G-4ATM1GW	APS18AFA128G-4BTM1GW
256GB	APS18AFA256G-4ATM1GW	APS18AFA256G-4BTM1GW
512GB	APS18AFA512G-4ATM1GW	APS18AFA512G-4BTM1GW

Note: Valid combinations are those products in mass production or will be in mass production. Consult your Apacer sales representative to confirm availability of valid combinations and to determine availability of new combinations.

© 2018 Apacer Technology Inc.

Revision History

Revision	Date	Description	Remark
1.0	10/18/2017	Official release	
1.1	11/3/2017	Added 512GB support	
1.2	1/22/2018	- Added 32GB support - Updated performance and power consumption for 512BB - Updated product ordering information	

© 2018 Apacer Technology Inc.

Global Presence

Taiwan (Headquarters)
Apacer Technology Inc.
1F., No.32, Zhongcheng Rd., Tucheng Dist.,
New Taipei City 236, Taiwan R.O.C.
Tel: 886-2-2267-8000
Fax: 886-2-2267-2261
amtsales@apacer.com

U.S.A.
Apacer Memory America, Inc.
46732 Lakeview Blvd., Fremont, CA 94538
Tel: 1-408-518-8699
Fax: 1-510-249-9551
sa@apacerus.com

Japan
Apacer Technology Corp.
6F, Daiyontamachi Bldg., 2-17-12, Shibaura, Minato-Ku,
Tokyo, 108-0023, Japan
Tel: 81-3-5419-2668
Fax: 81-3-5419-0018
jpservices@apacer.com

Europe
Apacer Technology B.V.
Science Park Eindhoven 5051 5692 EB Son,
The Netherlands
Tel: 31-40-267-0000
Fax: 31-40-290-0686
sales@apacer.nl

China
Apacer Electronic (Shanghai) Co., Ltd
Room D, 22/FL, No.2, Lane 600, JieyunPlaza,
Tianshan RD, Shanghai, 200051, China
Tel: 86-21-6228-9939
Fax: 86-21-6228-9936
sales@apacer.com.cn

India
Apacer Technologies Pvt Ltd,
Unit No.201, “Brigade Corner”, 7th Block
Jayanagar,
Yediyur Circle, Bangalore – 560082, India
Tel: 91-80-4152-9061
Fax: 91-80-4170-0215
sales_india@apacer.com

© 2018 Apacer Technology Inc.