Apacer

RoHS Recast Compliant

SATA-Disk Module 5A-M

SDM5A-M 7P/180D Slim2(H) Product Specifications

(Toshiba 15nm)

November 8, 2017

Version 1.3

Apacer Technology Inc.
1F, No.32, Zhongcheng Rd., Tucheng Dist., New Taipei City, Taiwan, R.O.C
Tel: +886-2-2267-8000 Fax: +886-2-2267-2261
www.apacer.com

Apacer

Features:

- **Standard Serial ATA 3.1 Revision**
  - SATA 6.0 Gbps interface
  - ATA-8 command set
  - Backward compatible with SATA 1.5/3.0 Gbps
- **Capacity**
  - 4, 8, 16, 32 GB
- **Performance***
  - Burst read/write: 600 MB/sec
  - Sequential read: Up to 120 MB/sec
  - Sequential write: Up to 40 MB/sec
- **Flash Management**
  - Built-in hardware ECC
  - Global Wear Leveling
  - Flash bad-block management
  - Flash Translation Layer: Page Mapping
  - S.M.A.R.T.
  - Power Failure Management
  - ATA Secure Erase
  - TRIM
- **NAND Flash Type:** MLC
- **MTBF:** >1,000,000 hours
- **Endurance (in Terabytes Written: TBW)**
  - 4 GB: 5 TBW
  - 8 GB: 11 TBW
  - 16 GB: 22 TBW
  - 32 GB: 39 TBW
- **Temperature Range**
  - Operating:
    Standard: 0°C to 70°C
    Extended: -40°C to 85°C
  - Storage: -40°C to 100°C
- **Supply Voltage**
  - 5.0 V ± 5%
- **Power Consumption***
  - Active mode: 160 mA
  - Idle mode: 80 mA
- **Connector Type**
  - 7-pin SATA signal connector
  - Power segment options: 2 metal pins on each side of SATA connector or power cable connector
- **Form Factor**
  - SATA Disk Module: 7-pin/180 degree
  - Dimensions: 19.8 ㎜ x 41.4 ㎜ x 7.5 ㎜
- **Shock & Vibration****
  - Shock:1,500 G
  - Vibration: 15 G
- **RoHS Recast Compliant**
  - Complies with 2011/65/EU Standard

*Varies from capacities. The values for performances and power consumptions presented are typical and may vary depending on flash configurations or platform settings. The term idle refers to the standby state of the device.
**Non-operating

© 2017 Apacer Technology Inc.

Table of Contents

1. General Descriptions 3

2. Pin Assignments 3

3. Product Specifications 4

3.1 Capacity 4
3.2 Performance 4
3.3 Environmental Specifications 4
3.4 Mean Time Between Failures (MTBF) 5
3.5 Certification and Compliance 5
3.6 Endurance 5

4. Flash Management 6

4.1 Error Correction/Detection 6
4.2 Bad Block Management 6
4.3 Global Wear Leveling 6
4.4 Flash Translation Layer – Page Mapping 6
4.5 ATA Secure Erase 6
4.6 Power Failure Management 7
4.7 TRIM 7
4.8 SATA Power Management 7

5. Software Interface 8

5.1 Command Set 8
5.2 S.M.A.R.T. 8

6. Electrical Specifications 10

6.1 Operating Voltage 10
6.2 Power Consumption 10

7. Physical Characteristics 11

7.1 Dimensions 11

8. Product Ordering Information 12

8.1 Product Code Designations 12
8.2 Valid Combinations 13

© 2017 Apacer Technology Inc.

1. General Descriptions

Apacer's SDM5A-M (SATA Disk Module 5A - M) is our next generation disk-on-module (DOM) series that offers elevated speed boost and higher error correction capabilities. Built with SATA 6 Gb/s interface, SDM5A-M delivers exceptional performance in data transfer.

With its SATA interface compliance and compact size, this high-speed disk module defines an ideal balance of performance, capacities, reliability and cost. SDM5A-M comes in moderate capacities that are suitable to boot industrial applications and light operating systems for specific operations, while with some extra memory space for data storage. The architectural nature of SATA disk module provides higher resistance to external environmental influences and better flexibility for motherboard space.

Regarding data reliability, SDM5A-M is built in with powerful ECC engine that can correct up to 40-bit per 1KB data. In addition, the controller unit of this DOM device supports wear-leveling, SMART and power failure management for data integrity. With its trustable reliability, performance and cost effectiveness, Apacer's SDM5A-M is definitely the ideal storage or cache solution for embedded and industrial computers, servers and thin clients.

2. Pin Assignments

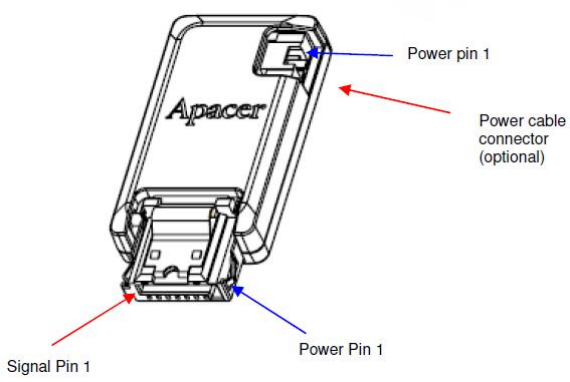

Table 2-1 Signal Segment

Pin	Type	Description
S1	GND	
S2	RxP	+ Differential Receive Signal
S3	RxN	- Differential Receive Signal
S4	GND	
S5	TxN	- Differential Transmit Signal
S6	TxP	+ Differential Transmit Signal
S7	GND	

Table 2-2 Power Segment

Pin	Signal/Description
P1	VCC (5V)
P2	GND

© 2017 Apacer Technology Inc.

3. Product Specifications

3.1 Capacity

Capacity specifications of SDM5A-M are available as shown in Table 3-1. It lists the specific capacity and the default numbers of heads, sectors and cylinders for each product line.

Table 3-1 Capacity Specifications

Capacity	Total bytes*	Cylinders	Heads	Sectors	Max LBA
4 GB	4,011,614,208	7,773	16	63	7,835,184
8 GB	8,012,390,400	15,525	16	63	15,649,200
16 GB	16,013,942,784	16,383	16	63	31,277,232
32 GB	32,017,047,552	16,383	16	63	62,533,296

*Display of total bytes varies from file systems, which means not all of the bytes can be used for storage.
**Notes: 1 GB = 1,000,000,000 bytes; 1 sector = 512 bytes.
LBA count addressed in the table above indicates total user storage capacity and will remain the same throughout the lifespan of the device. However, the total usable capacity of the SSD is most likely to be less than the total physical capacity because a small portion of the capacity is reserved for device maintenance usages.

3.2 Performance

Performance of SDM5A-M is listed below in Table 3-2.

Table 3-2 Performance Specifications

Capacity / Performance	4 GB	8 GB	16 GB	32 GB
Sequential Read* (MB/s)	105	105	105	120
Sequential Write* (MB/s)	24	24	22	40

Note:
Results may differ from various flash configurations or host system setting.
*Sequential performance is based on CrystalDiskMark 5.2.1 with file size 1,000MB.

3.3 Environmental Specifications

Environmental specifications of SDM5A-M product are shown in Table 3-3.

Table 3-3 Environmental Specifications

Item	Specifications
Operating temp.	0°C to 70°C (Standard); -40°C to 85°C (Extended)
Non-operating temp.	-40°C to 100°C
Operating vibration	7.69 Grms, 20~2000 Hz/random (compliant with MIL-STD-810G)
Non-operating vibration	4.02 Grms, 15 ~ 2000 Hz/sine (compliant with MIL-STD-810G)
Operating shock	50(G), 11(ms), half-sine wave
Non-operating shock	1,500(G), 0.5(ms), half-sine wave

© 2017 Apacer Technology Inc.

3.4 Mean Time Between Failures (MTBF)

Mean Time Between Failures (MTBF) is predicted based on reliability data for the individual components in SDM5A-M. The prediction result for SDM5A-M is more than 1,000,000 hours.

Note: The MTBF is predicated and calculated based on “Telcordia Technologies Special Report, SR-332, Issue 2” method.

3.5 Certification and Compliance

SDM5A-M complies with the following standards:

- CE
- FCC
- RoHS Recast
- MIL-STD-810

3.6 Endurance

The endurance of a storage device is predicted by TeraBytes Written based on several factors related to usage, such as the amount of data written into the drive, block management conditions, and daily workload for the drive. Thus, key factors, such as Write Amplifications and the number of P/E cycles, can influence the lifespan of the drive.

Table 3-4 Endurance Specifications

Capacity	TeraBytes Written
4 GB	5
8 GB	11
16 GB	22
32 GB	39

Note:

- The measurement assumes the data written to the SSD for test is under a typical and constant rate.
- The measurement follows the standard metric: 1 TB (Terabyte) = 1,000 GB.
- This estimation complies with JEDEC JESD-219, enterprise endurance workload of random data with payload size distribution.

© 2017 Apacer Technology Inc.

4. Flash Management

4.1 Error Correction/Detection

SDM5A-M implements a hardware ECC scheme, based on the BCH algorithm. It can detect and correct up to 40 bits error in 1K bytes.

4.2 Bad Block Management

Current production technology is unable to guarantee total reliability of NAND flash memory array. When a flash memory device leaves factory, it comes with a minimal number of initial bad blocks during production or out-of-factory as there is no currently known technology that produce flash chips free of bad blocks. In addition, bad blocks may develop during program/erase cycles. When host performs program/erase command on a block, bad block may appear in Status Register. Since bad blocks are inevitable, the solution is to keep them in control. Apacer flash devices are programmed with ECC, page mapping technique and S.M.A.R.T to reduce invalidity or error. Once bad blocks are detected, data in those blocks will be transferred to free blocks and error will be corrected by designated algorithms.

4.3 Global Wear Leveling

Flash memory devices differ from Hard Disk Drives (HDDs) in terms of how blocks are utilized. For HDDs, when a change is made to stored data, like erase or update, the controller mechanism on HDDs will perform overwrites on blocks. Unlike HDDs, flash blocks cannot be overwritten and each P/E cycle wears down the lifespan of blocks gradually. Repeatedly program/erase cycles performed on the same memory cells will eventually cause some blocks to age faster than others. This would bring flash storages to their end of service term sooner. Global wear leveling is an important mechanism that levels out the wearing of all blocks so that the wearing-down of all blocks can be almost evenly distributed. This will increase the lifespan of SSDs.

4.4 Flash Translation Layer – Page Mapping

Page mapping is an advanced flash management technology whose essence lies in the ability to gather data, distribute the data into flash pages automatically, and then schedule the data to be evenly written. Page-level mapping uses one page as the unit of mapping. The most important characteristic is that each logical page can be mapped to any physical page on the flash memory device. This mapping algorithm allows different sizes of data to be written to a block as if the data is written to a data pool and it does not need to take extra operations to process a write command. Thus, page mapping is adopted to increase random access speed and improve SSD lifespan, reduce block erase frequency, and achieve optimized performance and lifespan.

4.5 ATA Secure Erase

ATA Secure Erase is an ATA disk purging command currently embedded in most of the storage drives. Defined in ATA specifications, (ATA) Secure Erase is part of Security Feature Set that allows storage drives to erase all user data areas. The erase process usually runs on the firmware level as most of the ATA-based storage media currently in the market are built-in with this command. ATA Secure Erase can securely wipe out the user data in the drive and protects it from malicious attack.

© 2017 Apacer Technology Inc.

4.6 Power Failure Management

Power Failure Management plays a crucial role when experiencing unstable power supply. Power disruption may occur when users are storing data into the SSD. In this urgent situation, the controller would run multiple write-to-flash cycles to store the metadata for later block rebuilding. This urgent operation requires about several milliseconds to get it done. At the next power up, the firmware will perform a status tracking to retrieve the mapping table and resume previously programmed NAND blocks to check if there is any incompleteness of transmission.

4.7 TRIM

TRIM, though in capital letters usually, is a memory computation command rather than an abbreviation. It is mainly a SATA command that enables the operating system to inform the SSD (Solid State Drive) which blocks of previously stored data are no longer valid, due to erases by the host or operating system, such as file deletions or disk formatting. Once notified, SSD will begin the discard of the invalid LBAs and retain more space for itself, in fact, the discarded is no longer recoverable.

When an LBA is replaced by the operating system, as with overwrite of a file, the SSD is informed that the originally occupied LBA is determined as no longer in use or invalid. The SSD will not save those blocks in garbage collected sectors. Noticeably, a file deletion command by host or operating system never actually erases the actual content, but marks the file as deleted. This issue is even specifically noticeable for flash based memory devices, such as SSDs. In fact, an SSD will keep garbage collecting the invalid, previously occupied LBAs, if it is not informed that these LBAs can be erased. Thus, the SSD would experience a significant performance downfall.

4.8 SATA Power Management

By complying with SATA 6.0 Gb/s specifications, the SSD supports the following SATA power saving modes:

- ACTIVE: PHY ready, full power, Tx & Rx operational
- PARTIAL: Reduces power, resumes in under 10 µs (microseconds)
- SLUMBER: Reduces power, resumes in under 10 ms (milliseconds)
- HIPM: Host-Initiated Power Management
- DIPM: Device-Initiated Power Management
- AUTO-SLUMBER: Automatic transition from partial to slumber.

Note: The behaviors of power management features would depend on host/device settings.

© 2017 Apacer Technology Inc.

5. Software Interface

5.1 Command Set

Table 5-1 Command Set

Code	Command	Code	Command
E5h	Check Power Mode	F3h	Security Erase Prepare
06h	Data Set Management	F4h	Security Erase Unit
90h	Execute Device Diagnostic	F5h	Security Freeze Lock
E7h	Flush Cache	F1h	Security Set Password
EAh	Flush Cache EXT	F2h	Security Unlock
ECh	Identify Device	70h	Seek
E3h	Idle	EFh	Set Features
E1h	Idle Immediate	C6h	Set Multiple Mode
91h	Initialize Device Parameters	E6h	Sleep
C8h	Read DMA	B0h	SMART
25h	Read DMA EXT	E2h	Standby
C4h	Read Multiple	E0h	Standby Immediate
29h	Read Multiple EXT	CAh	Write DMA
20h	Read Sector	35h	Write DMA EXT
24h	Read Sector EXT	C5h	Write Multiple
40h	Read Verify Sectors	39h	Write Multiple EXT
42h	Read Verify Sectors EXT	30h	Write Sector
10h	Recalibrate	34h	Write Sector EXT
F6h	Security Disable Password		

5.2 S.M.A.R.T.

S.M.A.R.T. is an abbreviation for Self-Monitoring, Analysis and Reporting Technology, a self-monitoring system that provides indicators of drive health as well as potential disk problems. It serves as a warning for users from unscheduled downtime by monitoring and displaying critical drive information. Ideally, this should allow taking proactive actions to prevent drive failure and make use of S.M.A.R.T. information for future product development reference.

Apacer devices use the standard SMART command B0h to read data out from the drive to activate our S.M.A.R.T. feature that complies with the ATA/ATAPI specifications. S.M.A.R.T. Attribute IDs shall include initial bad block count, total later bad block count, maximum erase count, average erase count, power on hours and power cycle. When the S.M.A.R.T. Utility running on the host, it analyzes and reports the disk status to the host before the device reaches in critical condition.

Note: Attribute IDs may vary from product models due to various solution design and supporting capabilities.

© 2017 Apacer Technology Inc.

Apacer memory products come with S.M.A.R.T. commands and subcommands for users to obtain information of drive status and to predict potential drive failures. Users can take advantage of the following commands/subcommands to monitor the health of the drive.

Code	SMART Subcommand
D0h	READ DATA
D1h	READ ATTRIBUTE THRESHOLDS
D2h	Enable/Disable Attribute Autosave
D4h	Execute Off-line Immediate
D5h	Read Log (optional)
D6h	Write Log (optional)
D8h	Enable Operations
D9h	Disable operations
DAh	Return Status

General SMART attribute structure

Byte	Description
0	ID (Hex)
1 – 2	Status flag
3	Value
4	Worst
5*-11	Raw Data

*Byte 5: LSB

SMART attribute ID list

ID (Hex)	Attribute Name	Note
9 (0x09)	Power-on hours	General
12 (0x0C)	Power cycle count	General
163 (0xA3)	Max. erase count	General
164 (0xA4)	Avg. erase count	General
166 (0xA6)	Total later bad block count	General
167 (0xA7)	SSD Protect Mode	0: R/W, 3: Read Only
168 (0xA8)	SATA PHY Error Count	Command Fail Count
175 (0xAF)	Bad Cluster Table Count	ECC Fail Count
192 (0xC0)	Unexpected Power Loss Count	ATA Standby Command
194 (0xC2)	Temperature	PCB Temperature
241 (0xF1)	Total sectors of write	LBA

© 2017 Apacer Technology Inc.

6. Electrical Specifications

6.1 Operating Voltage

Table 6-1 lists the supply voltage for SDM5A-M.

Caution: **Absolute Maximum Stress Ratings –** Applied conditions greater than those listed under "Absolute Maximum Stress Ratings" may cause permanent damage to the device. This is a stress rating only and functional operation of the device at these conditions or conditions greater than those defined in the operational sections of this data sheet is not implied. Exposure to absolute maximum stress rating conditions may affect device reliability.

Table 6-1 Operating Range

Item	Range
Supply Voltage	5V ± 5% (4.75-5.25V)

6.2 Power Consumption

Table 6-2 lists the power consumption for SDM5A-M.

Table 6-2 Power Consumption

Capacity / Mode	4 GB	8 GB	16 GB	32 GB
Active (mA)	150	155	145	160
Idle (mA)	80	80	65	65

Note:
*All values are typical and may vary depending on flash configurations or host system settings.
**Active power is an average power measurement performed using CrystalDiskMark with 128KB sequential read/write transfers.

© 2017 Apacer Technology Inc.

7. Physical Characteristics

7.1 Dimensions

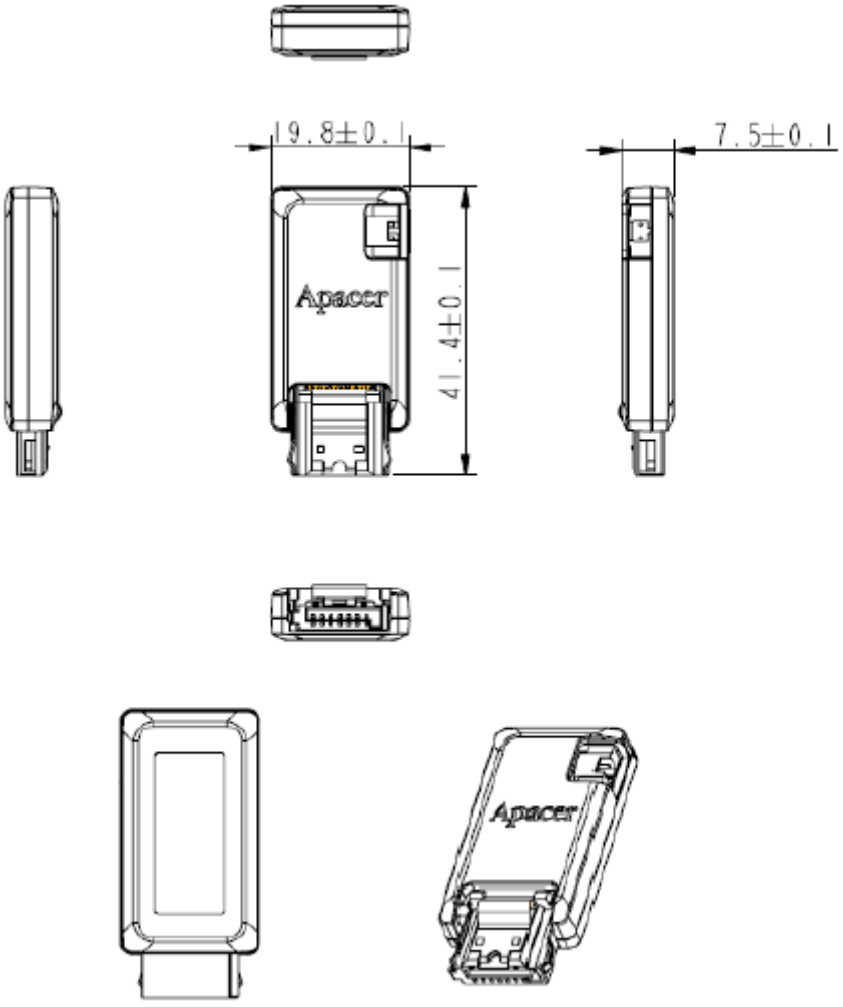

Unit: mm

© 2017 Apacer Technology Inc.

8. Product Ordering Information

8.1 Product Code Designations

AP SDM xxxG X 2 A N – X XXX X X

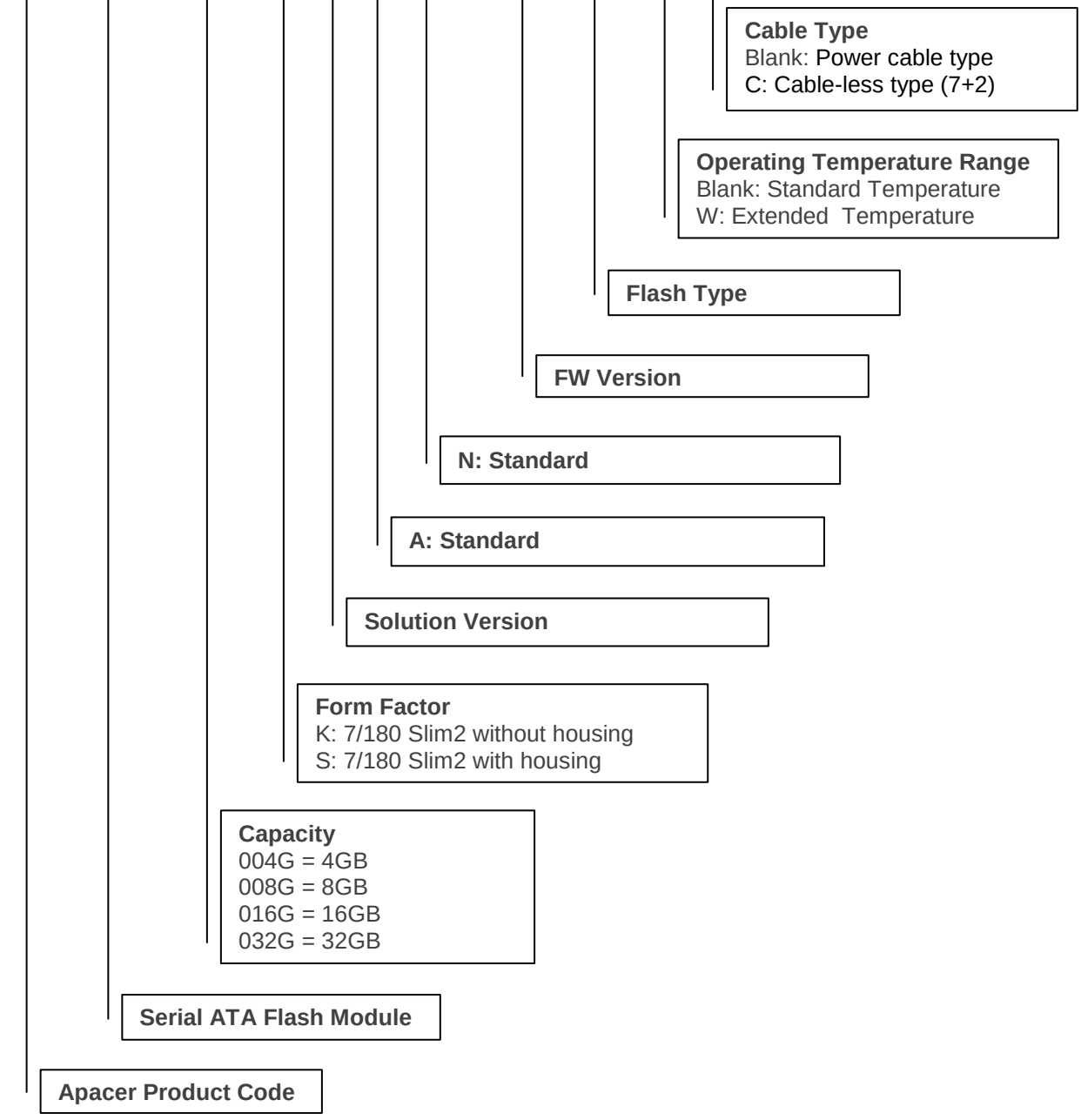

© 2017 Apacer Technology Inc.

8.2 Valid Combinations

8.2.1 7P/180D Slim2 (w/o housing)

Capacity	Standard Temperature	Extended Temperature
4GB	APSDM004GK2AN-QTM1	APSDM004GK2AN-QTM1W
8GB	APSDM008GK2AN-PTM1	APSDM008GK2AN-PTM1W
16GB	APSDM016GK2AN-PTM1	APSDM016GK2AN-PTM1W
32GB	APSDM032GK2AN-PTM1	APSDM032GK2AN-PTM1W

8.2.2 7P/180D Slim2 (with housing)

Capacity	Standard Temperature	Extended Temperature
4GB	APSDM004GS2AN-QTM1	APSDM004GS2AN-QTM1W
8GB	APSDM008GS2AN-PTM1	APSDM008GS2AN-PTM1W
16GB	APSDM016GS2AN-PTM1	APSDM016GS2AN-PTM1W
32GB	APSDM032GS2AN-PTM1	APSDM032GS2AN-PTM1W

Note:

1. The P/Ns are for models with power cable. However, for models without power cable, P/Ns vary depending on the type of cable-less solution:
   - For 7+2 cable-less solution, an additional digit “C” will be added at the end of the P/N.
2. Valid combinations are those products in mass production or will be in mass production. Consult your Apacer sales representative to confirm availability of valid combinations and to determine availability of new combinations.

© 2017 Apacer Technology Inc.

Revision History

Revision	Description	Date
1.0	Official release	10/11/2016
1.1	Added Flash Translation Layer: Page Mapping to Flash Management on Features page	8/17/2017
1.2	Added part numbers for 4GB with extended temperature support	8/17/2017
1.3	- Added 3.6 Endurance - Updated product ordering information	11/8/2017

© 2017 Apacer Technology Inc.

Global Presence

Taiwan (Headquarters)
Apacer Technology Inc.
1F., No.32, Zhongcheng Rd., Tucheng Dist.,
New Taipei City 236, Taiwan R.O.C.
Tel: 886-2-2267-8000
Fax: 886-2-2267-2261
amtsales@apacer.com

U.S.A.
Apacer Memory America, Inc.
46732 Lakeview Blvd., Fremont, CA 94538
Tel: 1-408-518-8699
Fax: 1-510-249-9551
sa@apacerus.com

Japan
Apacer Technology Corp.
5F, Matsura Bldg., Shiba, Minato-Ku
Tokyo, 105-0014, Japan
Tel: 81-3-5419-2668
Fax: 81-3-5419-0018
jpservices@apacer.com

Europe
Apacer Technology B.V.
Science Park Eindhoven 5051 5692 EB Son,
The Netherlands
Tel: 31-40-267-0000
Fax: 31-40-290-0686
sales@apacer.nl

China
Apacer Electronic (Shanghai) Co., Ltd
Room D, 22/FL, No.2, Lane 600, JieyunPlaza,
Tianshan RD, Shanghai, 200051, China
Tel: 86-21-6228-9939
Fax: 86-21-6228-9936
sales@apacer.com.cn

India
Apacer Technologies Pvt Ltd,
Unit No.201, “Brigade Corner”, 7th Block
Jayanagar,
Yediyur Circle, Bangalore – 560082, India
Tel: 91-80-4152-9061
Fax: 91-80-4170-0215
sales_india@apacer.com

© 2017 Apacer Technology Inc.