Apacer

RoHS Compliant

PCI Express Flash Drive

PT220-M242 BiCS5 Product Specifications

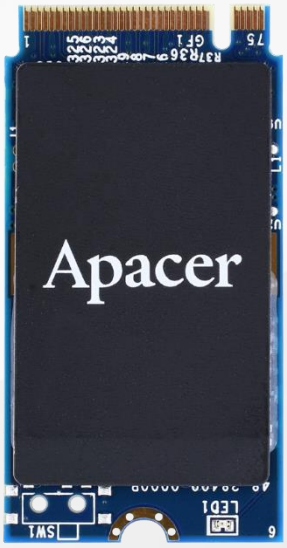

October 28, 2022

Version 1.1

Apacer Technology Inc.
1F, No.32, Zhongcheng Rd., Tucheng Dist., New Taipei City, Taiwan, R.O.C
Tel: +886-2-2267-8000 Fax: +886-2-2267-2261
www.apacer.com

Apacer

Specifications Overview:

- **PCIe Interface**
  - Compliant with PCI Express 3.1
  - Compliant with NVMe 1.3
  - Compatible with PCIe Gen3 x4 interface
- **Capacity**
  - 128, 256, 512 GB
  - 1 TB
- **Performance**[1]
  - Interface burst read/write: 4 GB/sec
  - Sequential read: up to 2,400 MB/sec
  - Sequential write: up to 2,100 MB/sec
  - Random read (4K): up to 158,000 IOPS
  - Random write (4K): up to 303,000 IOPS
- **Flash Management**
  - Low-Density Parity-Check (LDPC) Code
  - Global Wear Leveling
  - Flash bad-block management
  - Flash Translation Layer: Page Mapping
  - S.M.A.R.T.
  - DataDefender™
  - TRIM
  - Hyper Cache Technology
  - NVMe Secure Erase
- **NVMe Features**[2]
  - Supports HMB (Host Memory Buffer)
- **NAND Flash Type:** 3D TLC (BiCS5)
- **MTBF:** >3,000,000 hours
- **Endurance (in drive writes per day : DWPD)**
  - 128 GB: 2.38 DWPD
  - 256 GB: 1.99 DWPD
  - 512 GB: 2.25 DWPD
  - 1 TB: 1.96 DWPD
- **Temperature Range**
  - Operating: 0°C to 70°C
  - Storage: -55°C to 100°C
- **Supply Voltage**
  - 3.3 V ± 5%
- **Power Consumption**[1]
  - Active mode (Max.): 1,235 mA
  - Idle mode: 255 mA
- **Connector Type**
  - 75-pin M.2 module pinout
- **Power Management**
  - Supports APST
  - Supports ASPM L1.2
- **Form Factor**
  - Form Factor: M.2 2242 double side, M Key
  - Dimensions: 22.00 x 42.00 x 4.08(max.), unit: mm
  - Net weight: 4.2g ± 5%
- **Security**
  - AES 256-bit hardware encryption
- **Reliability**
  - Thermal Sensor
  - Thermal Throttling
  - End-to-End Data Protection
  - Sidefill
  - Heatsink design
- **LED Indicators for Drive Behavior**
- **RoHS Compliant**

Notes:
1. Varies from capacities. The values for performances and power consumptions presented are typical and may vary depending on flash configurations or platform settings. The term idle refers to the standby state of the device.
2. Windows 10 (version 1703) onwards supports the HMB (Host Memory Buffer) function.

© 2022 Apacer Technology Inc.

Table of Contents

1. General Description 4

2. Functional Block 4

3. Pin Assignments 5

4. Product Specifications 8

4.1 Capacity 8
4.2 Performance 8
4.3 Environmental Specifications 9
4.4 Mean Time Between Failures (MTBF) 9
4.5 Certification and Compliance 9
4.6 Endurance 9
4.7 LED Indicator Behavior 10

5. Flash Management 11

5.1 Error Correction/Detection 11
5.2 Bad Block Management 11
5.3 Global Wear Leveling 11
5.4 DataDefender™ 11
5.5 TRIM 11
5.6 Flash Translation Layer – Page Mapping 12
5.7 Hyper Cache Technology 12
5.8 NVMe Secure Erase 12

6. NVMe Support Features 13

6.1 Host Memory Buffer 13

7. Security and Reliability Features 14

7.1 Advanced Encryption Standard 14
7.2 Thermal Sensor 14
7.3 Thermal Throttling 14
7.4 End-to-End Data Protection 14
7.5 Sidefill 14
7.6 Heatsink Design 15

8. Software Interface 16

© 2022 Apacer Technology Inc.

8.1 Command Set....16
8.2 S.M.A.R.T. 17

9. Electrical Specifications....19

9.1 Operating Voltage....19
9.2 Power Consumption 19

10. Mechanical Specifications 20

10.1 Dimensions....20
10.2 Net Weight....21

11. Product Ordering Information....22

11.1 Product Code Designations....22
11.2 Valid Combinations....23

© 2022 Apacer Technology Inc.

1. General Description

Apacer PT220-M242 is the fastest SSD designed as M.2 2242 mechanical dimensions which provides full compliance with PCIe Gen3 x4 interface and NVMe 1.3 specifications, allowing it to operate in power management modes and greatly save on power consumption. Built with a powerful PCIe controller that supports on-the-module ECC as well as efficient wear leveling scheme, PT220-M242 delivers exceptionally low latency and outstanding performance in data transfer, reaching up to 158,000/303,000 and 2,400/2,100 MB/s in IOPS and sequential read/write. With the compact and high-speed storage, PT220-M242 is the ideal choice for larger, faster hosts deployed in a wide range of applications that require outstanding performance.

PT220-M242 utilizes 3D NAND for higher capacity up to 1TB and provides more power efficiency than 2D NAND. The PCIe SSD is not only implemented with LDPC (Low Density Parity Check) ECC engine to extend SSD endurance and increase data reliability, but also equipped with a built-in thermal sensor to monitor the temperature of the SSD via S.M.A.R.T commands and configured with thermal throttling to dynamically adjust frequency scaling to enhance data reliability and provide sustained performance while overheating. To ensure that products continue to operate normally in high vibration and under extreme environmental changes, Apacer also provides Sidefill technology to increase product reliability and resistance to various thermal and mechanical shocks as well as heatsink design to help keep an SSD cool and functioning correctly. For highly-intensive applications, End-to-End Data Protection ensures that data integrity can be assured at multiple points in the path to enable reliable delivery of data transfers.

In terms of security, Advanced Encryption Standard (AES) ensures data security and provides users with peace of mind knowing their data is safeguarded at all times. PT220-M242 also adopts the latest page mapping file translation layer and comes with various implementations including power saving modes, flash block management, TRIM, Hyper Cache technology and DataDefender™.

With exceptional performance, trustable reliability and cost effectiveness, PT220-M242 is definitely the ideal storage or cache solution for a variety of applications ranging from industrial, imaging, computing to enterprise markets.

2. Functional Block

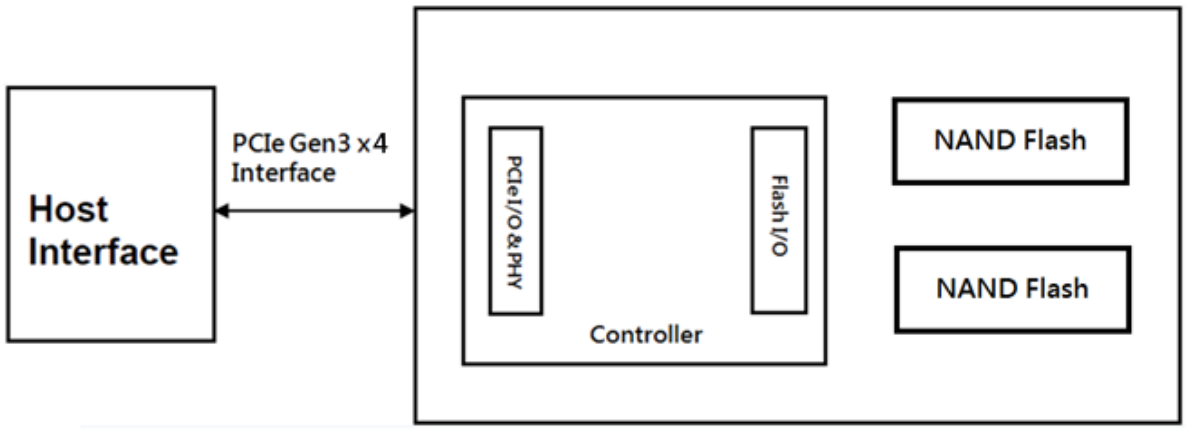

Figure 2-1 Functional Block Diagram

© 2022 Apacer Technology Inc.

3. Pin Assignments

This connector does not support hot plug capability. There are a total of 75 pins. 12 pin locations are used for mechanical key locations; this allows such a module to plug into Key M connectors.

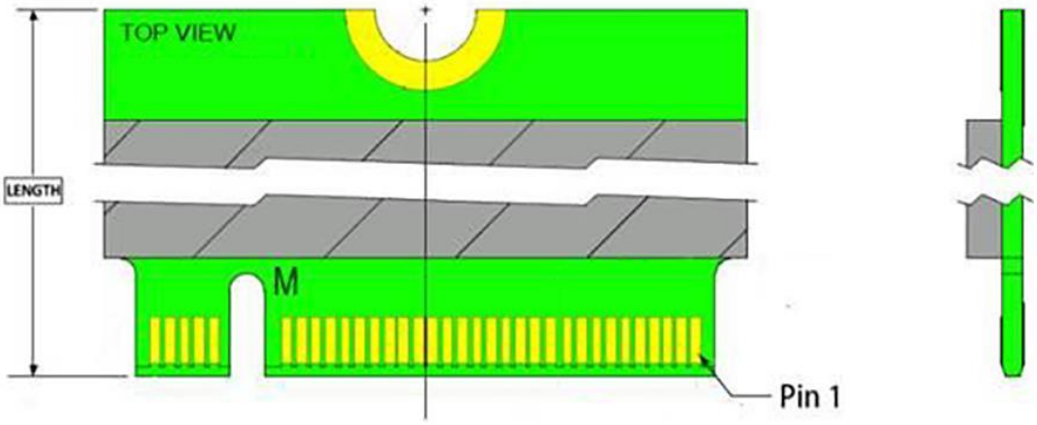

Figure 3-1 Pin Connectors

Table 3-1 Pin Assignments

Pin	Type	Description
1	GND	Ground
2	3.3 V	3.3V source
3	GND	Ground
4	3.3 V	3.3V source
5	PETn3	PCIe TX Differential signal defined by the PCI Express M.2 spec
6	PWRDIS (I)(0/1.8/3.3V)	No connect
7	PETp3	PCIe TX Differential signal defined by the PCI Express M.2 spec
8	PLN# (I)(0/1.8/3.3V)	No connect
9	GND	Ground
10	LED1#	Open drain, active low signal. These signals are used to allow the add-in card to provide status indicators via LED devices that will be provided by the system.
11	PERn3	PCIe RX Differential signal defined by the PCI Express M.2 spec
12	3.3 V	3.3V source
13	PERp3	PCIe RX Differential signals defined by the PCI Express M.2 spec
14	3.3 V	3.3V source
15	GND	Ground
16	3.3 V	3.3V source
17	PETn2	PCIe TX Differential signal defined by the PCI Express M.2 spec
18	3.3 V	3.3V source
19	PETp2	PCIe TX Differential signal defined by the PCI Express M.2 spec
20	NC	No connect
21	GND	Ground

© 2022 Apacer Technology Inc.

Table 3-1 Pin Assignments

Pin	Type	Description
22	VIO 1.8 V	No connect
23	PERn2	PCIe RX Differential signal defined by the PCI Express M.2 spec
24	NC	No connect
25	PERp2	PCIe RX Differential signal defined by the PCI Express M.2 spec
26	NC	No connect
27	GND	Ground
28	NC	Reserved for Apacer use only[1]
29	PETn1	PCIe TX Differential signal defined by the PCI Express M.2 spec
30	PLA_S3# (O)(0/1.8/3.3V)	Reserved for Apacer use only[1]
31	PETp1	PCIe TX Differential signal defined by the PCI Express M.2 spec
32	GND	No connect
33	GND	Ground
34	USB_D+	No connect
35	PERn1	PCIe RX Differential signal defined by the PCI Express M.2 spec
36	USB_D-	No connect
37	PERp1	PCIe RX Differential signal defined by the PCI Express M.2 spec
38	GND	No connect
39	GND	Ground
40	SMB_CLK (I/O)(0/1.8V)	No connect
41	PETn0	PCIe TX Differential signal defined by the PCI Express M.2 spec
42	SMB_DATA (I/O)(0/1.8V)	No connect
43	PETp0	PCIe TX Differential signal defined by the PCI Express M.2 spec
44	ALERT# (O)(0/1.8V)	No connect
45	GND	Ground
46	NC	No connect
47	PERn0	PCIe RX Differential signal defined by the PCI Express M.2 spec
48	NC	No connect
49	PERp0	PCIe RX Differential signal defined by the PCI Express M.2 spec
50	PERST# (I)(0/1.8V/3.3V)	PE-Reset is a functional reset to the card as specification. defined by the PCIe Mini CEM
51	GND	Ground
52	CLKREQ# (I/O)(0/1.8V/3.3V)	Clock Request is a reference clock request signal as defined by the PCIe Mini CEM specification; Also used by L1 PM Substates.
53	REFCLKn	PCIe Reference Clock signals (100 MHz) spec. defined by the PCI Express M.2
54	PEWAKE# (I/O)(0/1.8V/3.3V)	No connect
55	REFCLKp	PCIe Reference Clock signals (100 MHz) spec. defined by the PCI Express M.2
56	Reserved for MFG_DATA	Reserved for Apacer use only[1]
57	GND	Ground
58	Reserved for MFG_CLOCK	Reserved for Apacer use only[1]
59	Module Key M	Module Key
60	Module Key M	Module Key

© 2022 Apacer Technology Inc.

Table 3-1 Pin Assignments

Pin	Type	Description
61	Module Key M	Module Key
62	Module Key M	Module Key
63	Module Key M	Module Key
64	Module Key M	Module Key
65	Module Key M	Module Key
66	Module Key M	Module Key
67	NC	Reserved for Apacer use only[1]
68	SUSCLK (I)(0/1.8V/3.3V)	No connect
69	PEDET	No connect
70	3.3 V	3.3V source
71	GND	Ground
72	3.3 V	3.3V source
73	VIO_CFG (O)	Ground
74	3.3 V	3.3V source
75	GND	Ground

Note:
1. Reserved by Apacer, please do not connect to a host.

© 2022 Apacer Technology Inc.

4. Product Specifications

4.1 Capacity

Capacity specifications of PT220-M242 are available as shown in Table 4-1. It lists the specific capacity and the default numbers of heads, sectors and cylinders for each product line.

Table 4-1 Capacity Specifications

Capacity	Total bytes	Total LBA
128 GB	120,034,123,776	234,441,648
256 GB	240,057,409,536	468,862,128
512 GB	480,103,981,056	937,703,088
1 TB	960,197,124,096	1,875,385,008

Notes:
- Display of total bytes varies from operating systems.
- 1 GB = 1,000,000,000 bytes; 1 sector = 512 bytes.
- LBA count addressed in the table above indicates total user storage capacity and will remain the same throughout the lifespan of the device. However, the total usable capacity of the SSD is most likely to be less than the total physical capacity because a small portion of the capacity is reserved for device maintenance usages.

4.2 Performance

Performance of PT220-M242 is listed below in Table 4-2.

Table 4-2 Performance Specifications

Capacity / Performance	128 GB	256 GB	512 GB	1 TB
Sequential Read (MB/s)	1,145	2,240	2,400	2,345
Sequential Write (MB/s)	550	1,065	2,100	1,925
Random Read IOPS (4K)	43,000	81,000	158,000	151,000
Random Write IOPS (4K)	115,000	184,000	303,000	289,000

Notes:
- Results may differ from various flash configurations or host system setting.
- Sequential read/write is based on CrystalDiskMark 8.0.4 with file size 1,000MB.
- Random read/write is measured using IOMeter with Queue Depth 128.

© 2022 Apacer Technology Inc.

4.3 Environmental Specifications

Environmental specifications of PT220-M242 are shown in Table 4-3.

Table 4-3 Environmental Specifications

Item	Specifications
Operating temp.	0°C to 70°C
Non-operating temp.	-55°C to 100°C
Operating vibration	7.69 GRMS, 20~2000 Hz/random (compliant with MIL-STD-810G)
Non-operating vibration	4.02 GRMS, 15~2000 Hz/random (compliant with MIL-STD-810G)
Operating shock	50(G)/11ms/half sine (compliant with MIL-STD-202G)
Non-operating shock	1,500(G)/0.5(ms)/half sine (compliant with MIL-STD-883K)

Note: This Environmental Specification table indicates the conditions for testing the device. Real world usages may affect the results.

4.4 Mean Time Between Failures (MTBF)

Mean Time Between Failures (MTBF) is predicted based on reliability data for the individual components in PT220-M242. The prediction result for PT220-M242 is more than 3,000,000 hours.

Note: The MTBF is predicated and calculated based on “Telcordia Technologies Special Report, SR-332, Issue 3” method.

4.5 Certification and Compliance

PT220-M242 complies with the following standards:

- CE
- FCC
- RoHS
- MIL-STD-810G

4.6 Endurance

The endurance of a storage device is predicted by Drive Writes Per Day based on several factors related to usage, such as the amount of data written into the drive, block management conditions, and daily workload for the drive. Thus, key factors, such as Write Amplifications and the number of P/E cycles, can influence the lifespan of the drive.

Table 4-4 Endurance Specifications

Capacity	Drive Writes Per Day
128 GB	2.38
256 GB	1.99
512 GB	2.25
1 TB	1.96

Notes:

- This estimation complies with JEDEC JESD-219, enterprise endurance workload of random data with payload size distribution.
- Flash vendor guaranteed 3D NAND TLC P/E cycle: 3K
- WAF may vary from capacity, flash configurations and writing behavior on each platform.
- 1 Terabyte = 1,024GB
- DWPD (Drive Writes Per Day) is calculated based on the number of times that user overwrites the entire capacity of an SSD per day of its lifetime during the warranty period. (3D NAND TLC warranty: 3 years)

© 2022 Apacer Technology Inc.

4.7 LED Indicator Behavior

The behavior of the PT220-M280 LED indicators is described in Table 4-5.

Table 4-5 LED Behavior

Location	LED	Description
LED A	DAS	LED blinks when the drive is being accessed



© 2022 Apacer Technology Inc.

5. Flash Management

5.1 Error Correction/Detection

PT220-M242 implements a hardware ECC scheme, based on the Low Density Parity Check (LDPC). LDPC is a class of linear block error correcting code which has apparent coding gain over BCH code because LDPC code includes both hard decoding and soft decoding algorithms. With the error rate decreasing, LDPC can extend SSD endurance and increase data reliability while reading raw data inside a flash chip.

5.2 Bad Block Management

Current production technology is unable to guarantee total reliability of NAND flash memory array. When a flash memory device leaves factory, it comes with a minimal number of initial bad blocks during production or out-of-factory as there is no currently known technology that produce flash chips free of bad blocks. In addition, bad blocks may develop during program/erase cycles. Since bad blocks are inevitable, the solution is to keep them in control. Apacer flash devices are programmed with ECC, page mapping technique and S.M.A.R.T to reduce invalidity or error. Once bad blocks are detected, data in those blocks will be transferred to free blocks and error will be corrected by designated algorithms.

5.3 Global Wear Leveling

Flash memory devices differ from Hard Disk Drives (HDDs) in terms of how blocks are utilized. For HDDs, when a change is made to stored data, like erase or update, the controller mechanism on HDDs will perform overwrites on blocks. Unlike HDDs, flash blocks cannot be overwritten and each P/E cycle wears down the lifespan of blocks gradually. Repeatedly program/erase cycles performed on the same memory cells will eventually cause some blocks to age faster than others. This would bring flash storages to their end of service term sooner. Global wear leveling is an important mechanism that levels out the wearing of all blocks so that the wearing-down of all blocks can be almost evenly distributed. This will increase the lifespan of SSDs.

5.4 DataDefender™

Apacer's DataDefender is an advanced technology of power failure management which combines both firmware and hardware mechanisms to ensure data integrity. When power disruption occurs, the low voltage detector will be triggered. When this happens, the SSD's protection mechanism is activated and cuts off data transmission from the host. Once the power supply is resumed, the firmware protection mechanism will ensure the integrity of the firmware as well as the data already written into the NAND flash media.

5.5 TRIM

TRIM is a feature which helps improve the read/write performance and speed of solid-state drives (SSD). Unlike hard disk drives (HDD), SSDs are not able to overwrite existing data, so the available space gradually becomes smaller with each use. With the TRIM command, the operating system can inform the SSD which blocks of data are no longer in use and can be removed permanently. Thus, the SSD will perform the erase action, which prevents unused data from occupying blocks all the time.

© 2022 Apacer Technology Inc.

5.6 Flash Translation Layer – Page Mapping

Page mapping is an advanced flash management technology whose essence lies in the ability to gather data, distribute the data into flash pages automatically, and then schedule the data to be evenly written. Page-level mapping uses one page as the unit of mapping. The most important characteristic is that each logical page can be mapped to any physical page on the flash memory device. This mapping algorithm allows different sizes of data to be written to a block as if the data is written to a data pool and it does not need to take extra operations to process a write command. Thus, page mapping is adopted to increase random access speed and improve SSD lifespan, reduce block erase frequency, and achieve optimized performance and lifespan.

5.7 Hyper Cache Technology

Apacer proprietary Hyper Cache technology uses a portion of the available capacity as SLC (1bit-per-cell) NAND flash memory, called Hyper cache mode. When data is written to SSD, the firmware will direct the data to Hyper Cache mode, providing excellent performance to handle various scenarios in industrial use.

5.8 NVMe Secure Erase

NVMe Secure Erase is an NVMe drive sanitize command currently embedded in most of the storage drives. Defined in NVMe specifications, NVMe Secure Erase is part of Format NVM command that allows storage drives to erase all user data areas. The erase process usually runs on the firmware level as most of the NVMe-based storage media currently in the market are built-in with this command. NVMe Secure Erase can securely wipe out the user data in the drive and protects it from malicious attack.

© 2022 Apacer Technology Inc.

6. NVMe Support Features

6.1 Host Memory Buffer

Host Memory Buffer (HMB) allows HOST to allocate system memory for SSD’s exclusive use in order to provide better performance and endurance, especially for DRAMless solutions.

© 2022 Apacer Technology Inc.

7. Security and Reliability Features

7.1 Advanced Encryption Standard

Advanced Encryption Standard (AES) is a specification for the encryption of electronic data. AES has been adopted by the U.S. government since 2001 to protect classified information and is now widely implemented in embedded computing applications. The AES algorithm used in software and hardware is symmetric so that encrypting/decrypting requires the same encryption key. Without the key, the encrypted data is inaccessible to ensure information security.

Notably in flash memory applications, AES 256-bit hardware encryption is the mainstream to protect sensitive or confidential data. The hardware encryption provides better performance, reliability, and security than software encryption. It uses a dedicated processor, which is built inside the controller, to process the encryption and decryption. This enormously shortens the processing time and makes it efficient.

7.2 Thermal Sensor

Apacer Thermal Sensor is a digital temperature sensor with serial interface. By using designated pins for transmission, storage device owners are able to read temperature data.

7.3 Thermal Throttling

Thermal throttling can monitor the temperature of the SSD equipped with a built-in thermal sensor via S.M.A.R.T. commands. This method can ensure the temperature of the device stays within temperature limits by drive throttling, i.e. reducing the speed of the drive when the device temperature reaches the threshold level, so as to prevent overheating, guarantee data reliability, and prolong product lifespan. When the temperature exceeds the maximum threshold level, thermal throttling will be triggered to reduce performance step by step to prevent hardware components from being damaged. Performance is only permitted to drop to the extent necessary for recovering a stable temperature to cool down the device's temperature. Once the temperature decreases to the minimum threshold value, transfer speeds will rise back to its optimum performance level.

7.4 End-to-End Data Protection

End-to-End Data Protection is a feature implemented in Apacer SSD products that extends error control to cover the entire path from the host computer to the drive and back, and that ensures data integrity at multiple points in the path to enable reliable delivery of data transfers. Unlike ECC which does not exhibit the ability to determine the occurrence of errors throughout the process of data transmission, End-to-End Data Protection allows SSD controller to identify an error created anywhere in the path and report the error to the host computer before it is written to the drive. This error-checking and error-reporting mechanism therefore guarantees the trustworthiness and reliability of the SSD.

7.5 Sidefill

Apacer's sidefill technology strengthens the connections between solder joints and their board, making them more robust and vibration-resistant. It also allows for heat dissipation to offset thermal damage.

© 2022 Apacer Technology Inc.

7.6 Heatsink Design

In many applications, SSDs are subject to challenging conditions. If the working environment is already hot, and the SSD's operation causes it to increase in temperature as well, the result could be damage to the hardware or corrupted data. For this reason, Apacer's heatsink design is developed for heat dissipation to cool both the NAND Flash and the Controller IC, while still allowing an SSD to deliver high-speed performance, as well as prevent heat-related damage from occurring.

© 2022 Apacer Technology Inc.

8. Software Interface

8.1 Command Set

Table 8-1 summarizes the commands supported by PT220-M242.

Table 8-1 Admin Commands

Opcode	Command Description
00h	Delete I/O Submission Queue
01h	Create I/O Submission Queue
02h	Get Log Page
04h	Delete I/O Completion Queue
05h	Create I/O Completion Queue
06h	Identify
08h	Abort
09h	Set Features
0Ah	Get Features
0Ch	Asynchronous Event Request
10h	Firmware Activate
11h	Firmware Image Download
14h	Device Self-test

Table 8-2 Admin Commands – NVM Command Set Specific

Opcode	Command Description
80h	Format NVM
84h	Sanitize

Table 8-3 NVM Commands

Opcode	Command Description
00h	Flush
01h	Write
02h	Read
04h	Write Uncorrectable
05h	Compare
08h	Write Zeroes
09h	Dataset Management

© 2022 Apacer Technology Inc.

8.2 S.M.A.R.T.

SMART, an acronym for Self-Monitoring, Analysis and Reporting Technology, is an open standard that allows a hard disk drive to automatically detect its health and report potential failures. When a failure is recorded by SMART, users can choose to replace the drive to prevent unexpected outage or data loss. Moreover, SMART can inform users of impending failures while there is still time to perform proactive actions, such as copy data to another device.

Table 8-4 SMART (02h)

Byte	Length	Description
0	1	Critical Warning
1-2	2	Composite Temperature (PCB Sensor)
3	1	Available Spare
4	1	Available Spare Threshold
5	1	Percentage Used (Average Erase Count / P/E Cycle Count)
6-31	26	Reserved
32-47	16	Data Units Read
48-63	16	Data Units Written
64-79	16	Host Read Commands
80-95	16	Host Write Commands
96-111	16	Controller Busy Time
112-127	16	Power Cycles
128-143	16	Power On Hours
144-159	16	Unsafe Shutdowns
160-175	16	Media and Data Integrity Errors
176-191	16	Number of Error Information Log Entries
192-195	4	Warning Composite Temperature Time
196-199	4	Critical Composite Temperature Time
200-201	2	Temperature Sensor 1: Controller Temperature
202-203	2	Temperature Sensor 2: PCB Temperature
204-205	2	Temperature Sensor 3: NAND Flash Temperature
206-207	2	Temperature Sensor 4
208-209	2	Temperature Sensor 5
210-211	2	Temperature Sensor 6
212-213	2	Temperature Sensor 7
214-215	2	Temperature Sensor 8
216-511	296	Reserved

© 2022 Apacer Technology Inc.

Table 8-5 SMART (C0h)

Byte	Length	Description
0-255	256	Reserved
256-257	2	SSD Protect Mode
258-261	4	Host Read UNC Count
262-265	4	Reserved
266-269	4	CRC Error Count
270-273	4	Total Early Bad Block Count
274-277	4	Total Later Bad Block Count
278-281	4	Max Erase Count
282-285	4	Average Erase Count
286-289	4	Program Fail Count
290-293	4	Erase Fail Count
294-301	8	Flash Write Sector
302-305	4	Total Spare Block
306-309	4	Current Spare Block
310-313	4	Read Retry Count
314-511	210	Reserved

© 2022 Apacer Technology Inc.

9. Electrical Specifications

9.1 Operating Voltage

Table 9-1 lists the supply voltage for PT220-M242.

Table 9-1 Operating Range

Item	Range
Supply Voltage	3.3V ± 5%

9.2 Power Consumption

Table 9-2 lists the power consumption for PT220-M242.

Table 9-2 Power Consumption (Unit: mA)

Mode \ Capacity	128 GB	256 GB	512 GB	1 TB
Active (Max.)	825	1,215	1,235	1,210
Idle	245	255	250	250

Notes:
- All values are typical and may vary depending on flash configurations or host system settings.
- Power consumption is measured using CrystalDiskMark 8.0.4.

© 2022 Apacer Technology Inc.

10. Mechanical Specifications

10.1 Dimensions

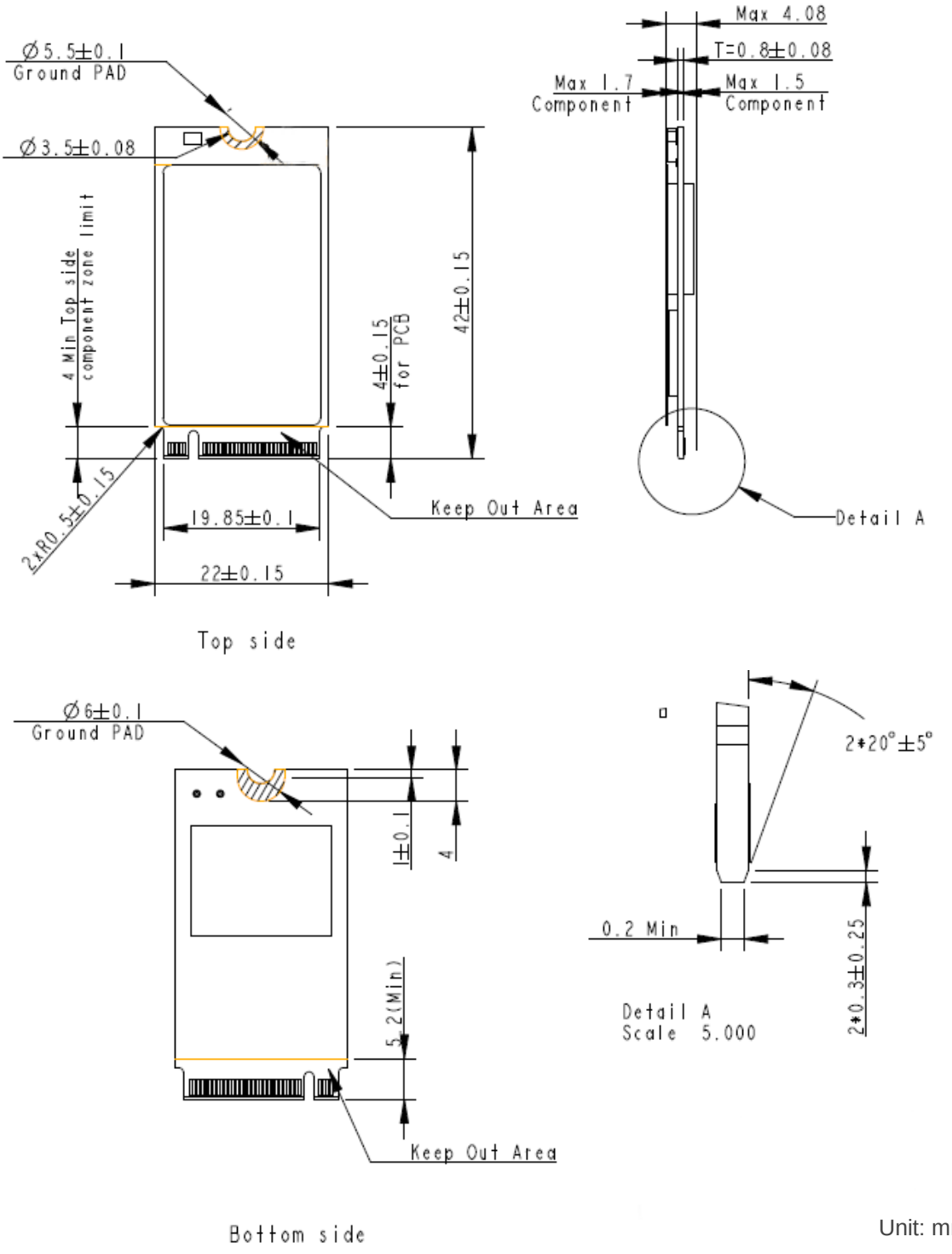

Unit: mm

Figure 10-1 Physical Dimensions

© 2022 Apacer Technology Inc.

10.2 Net Weight

Table 10-1 Net Weight

Capacity	Net Weight (g ± 5%)
128GB	3.5
256GB	3.9
512GB	4.1
1TB	4.2

© 2022 Apacer Technology Inc.

11. Product Ordering Information

11.1 Product Code Designations

Apacer's PT220-M242 SSD is available in different configurations and densities. See the chart below for a comprehensive list of options for the PT220-M242 series devices.

Code	1	2	3	4	5	6	7	8	9	10	11	12	13	14	15	16
	B	7	2	.	2	2	C	X	G	U	.	X	X	X	X	X

Code 1-3 (Product Line & Form Factor)	PCIe M.2 2242
Code 5-6 (Model/Solution)	PT220-M242
Code 7-8 (Product Capacity)	CH: 128GB CJ: 256GB CK: 512GB CL: 1TB
Code 9 (Flash Type & Product Temp)	3D TLC Standard temperature
Code 10 (Product Spec)	Double side M key with graphene
Code 12-14 (Version Number)	Random numbers generated by system
Code 15-16 (Firmware Version)	24: 128GB with thermal sensor 21: 256GB/512GB/1TB with thermal sensor

© 2022 Apacer Technology Inc.

11.2 Valid Combinations

The following table lists the available models of the PT220-M242 series which are in mass production or will be in mass production. Consult your Apacer sales representative to confirm availability of valid combinations and to determine availability of new combinations.

Capacity	Valid Combination
128GB	B72.22CHGU.00124
256GB	B72.22CJGU.00121
512GB	B72.22CKGU.00121
1TB	B72.22CLGU.00121

© 2022 Apacer Technology Inc.

Revision History

Revision	Description	Date
1.0	Initial release	10/5/2022
1.1	Updated 10.1 Dimensions	10/28/2022

© 2022 Apacer Technology Inc.

Global Presence

Taiwan (Headquarters)
Apacer Technology Inc.
1F., No.32, Zhongcheng Rd., Tucheng Dist.,
New Taipei City 236, Taiwan R.O.C.
Tel: 886-2-2267-8000
Fax: 886-2-2267-2261
amtsales@apacer.com

U.S.A.
Apacer Memory America, Inc.
46732 Lakeview Blvd., Fremont, CA 94538
Tel: 1-408-518-8699
Fax: 1-510-249-9551
sa@apacerus.com

Japan
Apacer Technology Corp.
6F, Daiyontamachi Bldg., 2-17-12, Shibaura, Minato-Ku,
Tokyo, 108-0023, Japan
Tel: 81-3-5419-2668
Fax: 81-3-5419-0018
jpservices@apacer.com

Europe
Apacer Technology B.V.
Science Park Eindhoven 5051 5692 EB Son,
The Netherlands
Tel: 31-40-267-0000
Fax: 31-40-290-0686
sales@apacer.nl

China
Apacer Electronic (Shanghai) Co., Ltd
Room D, 22/FL, No.2, Lane 600, JieyunPlaza,
Tianshan RD, Shanghai, 200051, China
Tel: 86-21-6228-9939
Fax: 86-21-6228-9936
sales@apacer.com.cn

India
Apacer Technologies Pvt Ltd,
1874, South End C Cross, 9th Block Jayanagar,
Bangalore-560069, India
Tel: 91-80-4152-9061/62
Fax: 91-80-4170-0215
sales_india@apacer.com

© 2022 Apacer Technology Inc.