Apacer

RoHS Compliant

PCI Express Flash Drive

PV910-M280 Product Specifications



November 22, 2022

Version 1.3

Apacer Technology Inc.

1F, No.32, Zhongcheng Rd., Tucheng Dist., New Taipei City, Taiwan, R.O.C

Tel: +886-2-2267-8000 Fax: +886-2-2267-2261

www.apacer.com

Apacer

Specifications Overview:

- **PCIe Interface**
  - Compliant with NVMe 1.3
  - Compatible with PCIe Gen3 x2 interface
- **Capacity**
  - Single side: 120, 240, 480 GB
  - Double side: 960 GB
- **Performance[1]**
  - Interface burst read/write: 2 GB/sec
  - Sequential read: up to 1,615 MB/sec
  - Sequential write: up to 1,310 MB/sec
  - Random read (4K): up to 135,000 IOPS
  - Random write (4K): up to 130,000 IOPS
- **Flash Management**
  - Low-Density Parity-Check (LDPC) Code
  - Global Wear Leveling
  - Flash bad-block management
  - Flash Translation Layer: Page Mapping
  - DataDefender™
  - S.M.A.R.T.
  - TRIM
  - Hyper Cache Technology
  - Over-provisioning
  - SMART Read Refresh™
  - NVMe Secure Erase
- **NAND Flash Type:** 3D TLC (BiCS3)
- **MTBF:** >3,000,000 hours
- **Endurance (in drive writes per day: DWPD)**
  - 120 GB: 2.02 DWPD
  - 240 GB: 1.99 DWPD
  - 480 GB: 1.96 DWPD
  - 960 GB: 1.86 DWPD
- **Temperature Range**
  - Operating:
    Standard: 0°C to 70°C
    Wide: -40°C to 85°C
  - Storage: -40°C to 100°C
- **Supply Voltage**
  - 3.3 V ± 5%
- **Power Consumption[1]**
  - Active mode (Max.): 745 mA
  - Idle mode: 145 mA
- **Connector Type**
  - 75-pin M.2 module pinout
- **Form Factor**
  - M.2 2280-D5-B-M Key
  - Dimensions (unit: mm)
    Single side: 22.00 x 80.00 x 2.38(max.)
    Double side: 22.00 x 80.00 x 3.88(max.)
  - Net weight: 6.61g ± 5%
- **Security**
  - AES 256-bit hardware encryption
  - Signed Firmware
- **Reliability**
  - Thermal Sensor
  - Thermal Throttling
  - End-to-End Data Protection
- **Power Management**
  - Supports APST
  - Supports ASPM L1.2
- **NVMe Features[2]**
  - Supports HMB (Host Memory Buffer)
- **LED Indicators for Drive Behavior**
- **RoHS Compliant**

Notes:
1. Varies from capacities. The values for performances and power consumptions presented are typical and may vary depending on flash configurations or platform settings.
2. Windows 10 (version 1703) onwards supports the HMB (Host Memory Buffer) function.

© 2022 Apacer Technology Inc.

Table of Contents

1. General Description 4

2. Functional Block 4

3. Pin Assignments 5

4. Product Specifications 8

4.1 Capacity 8
4.2 Performance 8
4.3 Environmental Specifications 9
4.4 Mean Time Between Failures (MTBF) 9
4.5 Certification and Compliance 9
4.6 Endurance 9
4.7 LED Indicator Behavior 10

5. Flash Management 11

5.1 Error Correction/Detection 11
5.2 Bad Block Management 11
5.3 Global Wear Leveling 11
5.4 Flash Translation Layer – Page Mapping 11
5.5 DataDefender™ 12
5.6 TRIM 12
5.7 Over-provisioning 12
5.8 Hyper Cache Technology 12
5.9 SMART Read Refresh™ 12
5.10 NVMe Secure Erase 12

6. NVMe Support Features 13

6.1 Host Memory Buffer 13

7. Security and Reliability Features 14

7.1 Advanced Encryption Standard 14
7.2 Signed Firmware 14
7.3 Thermal Sensor 14
7.4 Thermal Throttling 14
7.5 End-to-End Data Protection 14

© 2022 Apacer Technology Inc.

8. Software Interface 15

8.1 Command Set.....15

8.2 S.M.A.R.T. 16

9. Electrical Specifications.....18

9.1 Operating Voltage.....18

9.2 Power Consumption 18

10. Mechanical Specifications 19

10.1 Single Side 19

10.2 Double Side 19

10.3 Net Weight.....20

11. Product Ordering Information.....21

11.1 Product Code Designations.....21

11.2 Valid Combinations.....22

© 2022 Apacer Technology Inc.

1. General Description

Apacer PV910-M280, utilizing 3D NAND for higher capacity up to 960GB and providing more power efficiency than 2D NAND, is the next generation Solid State Drive (SSD) with compact and high-speed storage to support larger, faster hosts deployed in a wide range of applications that require outstanding performance.

Designed with PCIe-based connector pinouts, PV910-M280 provides full compliance with the latest PCIe Gen3 x2 and NVM Express interface specifications which allows the SSD to not only operate in power management modes and greatly save on power consumption, but also deliver exceptionally low latency and high performance, up to 1,615 MB/s read and 1,310 MB/s write. This new standard is designed for a variety of applications ranging from industrial, imaging, computing to enterprise markets.

PV910-M280 is built with a powerful PCIe controller that supports on-the-module ECC as well as efficient wear leveling scheme, and implemented with LDPC (Low Density Parity Check) ECC engine to extend SSD endurance and increase data reliability. Furthermore, PV910-M280 is equipped with a built-in thermal sensor to monitor the temperature of the SSD via S.M.A.R.T commands and configured with thermal throttling to dynamically adjust frequency scaling to enhance data reliability and provide sustained performance while overheating. For highly-intensive applications, End-to-End Data Protection ensures that data integrity can be assured at multiple points in the path to enable reliable delivery of data transfers.

Security-wise, Advanced Encryption Standard (AES) ensures data security and provides users with peace of mind knowing their data is safeguarded at all times, while Signed Firmware allows the drive to install valid and authentic firmware by including a digital signature. PV910-M280 also adopts the latest page mapping file translation layer and comes with various implementations including power saving modes, flash block management, S.M.A.R.T., TRIM, Hyper Cache technology, over-provisioning, DataDefender™ and SMART Read Refresh™.

With exceptional performance, trustable reliability and enhanced data protection, PV910-M280 is definitely the ideal storage or cache solution for a variety of applications ranging from industrial, imaging, computing to enterprise markets.

2. Functional Block

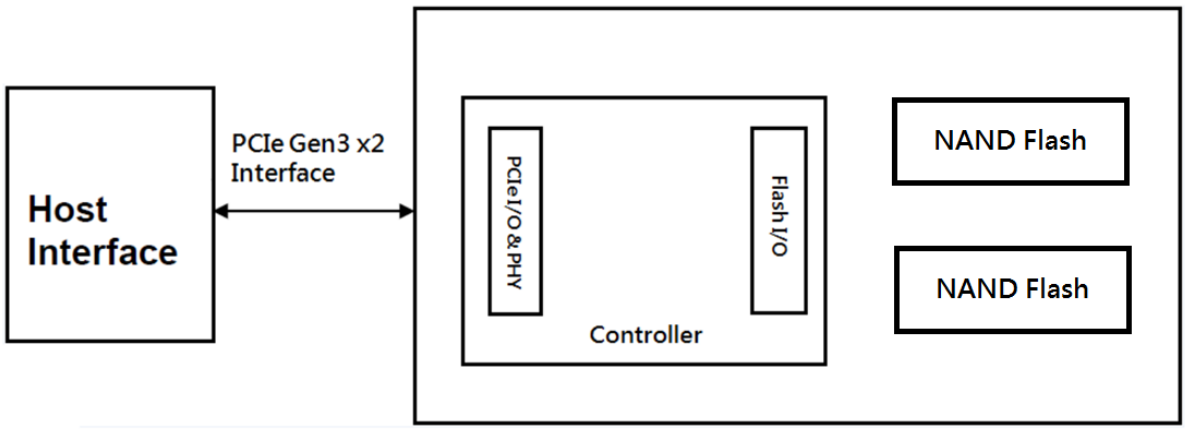

Figure 2-1 Functional Block Diagram

© 2022 Apacer Technology Inc.

3. Pin Assignments

This connector does not support hot plug capability. There are a total of 75 pins. 12 pin locations are used for mechanical key locations; this allows such a module to plug into both Key B and Key M connectors.

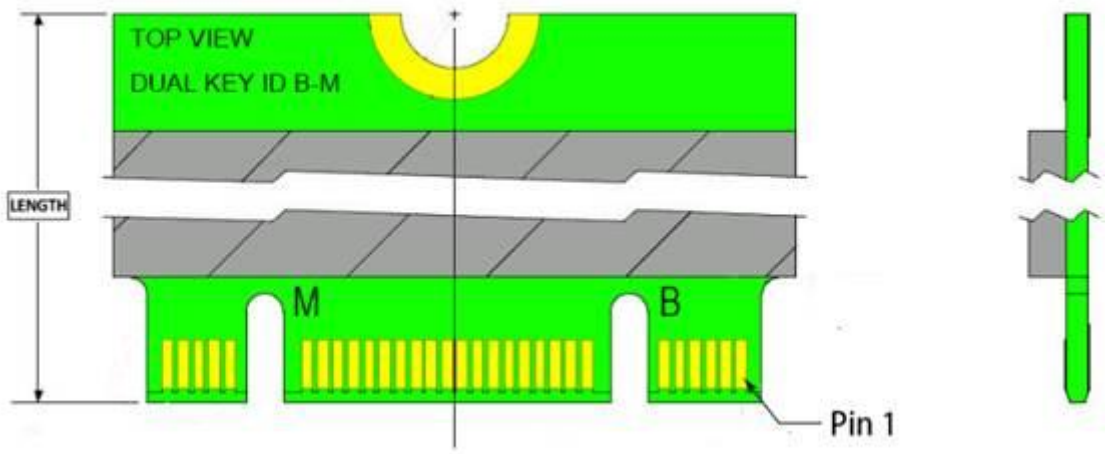

Figure 3-1 Pin Connectors

Table 3-1 Pin Assignments

Pin	Type	Description
1	GND	Ground
2	3.3V	3.3V source
3	GND	Ground
4	3.3V	3.3V source
5	N/C	No connect
6	N/C	No connect
7	N/C	No connect
8	N/C	No connect
9	GND	Ground
10	LED1#(O)	Status indicators via LED devices
11	N/C	No connect
12	Module Key	Module Key
13	Module Key	Module Key
14	Module Key	Module Key
15	Module Key	Module Key
16	Module Key	Module Key
17	Module Key	Module Key
18	Module Key	Module Key
19	Module Key	Module Key
20	N/C	No connect

© 2022 Apacer Technology Inc.

Table 3-1 Pin Assignments

Pin	Type	Description
21	GND	Ground
22	N/C	No connect
23	N/C	No connect
24	N/C	No connect
25	N/C	No connect
26	N/C	No connect
27	GND	Ground
28	N/C	No connect
29	PETn1	PCIe TX Differential signal defined by the PCI Express M.2 spec
30	N/C	Reserved for Apacer use only[1]
31	PETp1	PCIe TX Differential signal defined by the PCI Express M.2 spec
32	N/C	No connect
33	GND	Ground
34	N/C	No connect
35	PERn1	PCIe RX Differential signal defined by the PCI Express M.2 spec
36	N/C	No connect
37	PERp1	PCIe RX Differential signal defined by the PCI Express M.2 spec
38	N/C	No connect
39	GND	Ground
40	SMB_CLK	No connect
41	PETn0	PCIe TX Differential signal defined by the PCI Express M.2 spec
42	SMB_DATA	No connect
43	PETp0	PCIe TX Differential signal defined by the PCI Express M.2 spec
44	ALERT#	No connect
45	GND	Ground
46	N/C	No connect
47	PERn0	PCIe RX Differential signal defined by the PCI Express M.2 spec
48	N/C	No connect
49	PERp0	PCIe RX Differential signal defined by the PCI Express M.2 spec
50	PERST#(I)(0/3.3V)	PE-Reset is a functional reset to the card as specification. defined by the PCIe Mini CEM
51	GND	Ground
52	CLKREQ#(I/O)(0/3.3V)	Clock Request is a reference clock request signal as defined by the PCIe Mini CEM specification; Also used by L1 PM Substates.
53	REFCLKn	PCIe Reference Clock signals (100 MHz) spec. defined by the PCI Express M.2
54	PEWAKE#(I/O)(0/3.3V)	Open Drain with pull up on platform; Active Low. PCIe PME Wake.
55	REFCLKp	PCIe Reference Clock signals (100 MHz) spec. defined by the PCI Express M.2
56	Reserved for MFG DATA	Reserved for Apacer use only[1]
57	GND	Ground
58	Reserved for MFG CLOCK	Reserved for Apacer use only[1]
59	Module Key	Module Key

© 2022 Apacer Technology Inc.

Table 3-1 Pin Assignments

Pin	Type	Description
60	Module Key	Module Key
61	Module Key	Module Key
62	Module Key	Module Key
63	Module Key	Module Key
64	Module Key	Module Key
65	Module Key	Module Key
66	Module Key	Module Key
67	N/C	Reserved for Apacer use only[1]
68	N/C	No connect
69	PEDET (NC-PCIe)	Host I/F Indication; No connect for PCIe.
70	3.3V	3.3V source
71	GND	Ground
72	3.3V	3.3V source
73	GND	Ground
74	3.3V	3.3V source
75	GND	Ground

Note:
1. Reserved by Apacer, please do not connect to a host.

© 2022 Apacer Technology Inc.

4. Product Specifications

4.1 Capacity

Capacity specifications of PV910-M280 are available as shown in Table 4-1. It lists the specific capacity and the default numbers of heads, sectors and cylinders for each product line.

Table 4-1 Capacity Specifications

Capacity	Total bytes	Total LBA
120 GB	120,034,123,776	234,441,648
240 GB	240,057,409,536	468,862,128
480 GB	480,103,981,056	937,703,088
960 GB	960,197,124,096	1,875,385,008

Notes:
- Display of total bytes varies from operating systems.
- 1 GB = 1,000,000,000 bytes; 1 sector = 512 bytes.
- LBA count addressed in the table above indicates total user storage capacity and will remain the same throughout the lifespan of the device. However, the total usable capacity of the SSD is most likely to be less than the total physical capacity because a small portion of the capacity is reserved for device maintenance usages.

4.2 Performance

Performance of PV910-M280 is listed below in Table 4-2.

Table 4-2 Performance Specifications

Capacity / Performance	120 GB	240 GB	480 GB	960 GB
Sequential Read (MB/s)	1,430	1,615	1,540	1,525
Sequential Write (MB/s)	495	955	1,265	1,310
Random Read IOPS (4K)	81,000	121,000	135,000	121,000
Random Write IOPS (4K)	99,000	130,000	130,000	125,000

Notes:
- Measured with OS version: Win10 (64bit), version 1803 with HMB (Host Memory Buffer), performance may differ from various flash configurations or host system settings.
- Sequential read/write is based on CrystalDiskMark 8.0.4 with file size 1,000MB.
- Random read/write is measured using IOMeter with Queue Depth 128.

© 2022 Apacer Technology Inc.

4.3 Environmental Specifications

Environmental specifications of PV910-M280 are shown in Table 4-3.

Table 4-3 Environmental Specifications

Item	Specifications
Operating temp.	0°C to 70°C (Standard); -40°C to 85°C (Wide)
Non-operating temp.	-40°C to 100°C
Operating vibration	7.69 GRMS, 20~2000 Hz/random (compliant with MIL-STD-810G)
Non-operating vibration	4.02 GRMS, 15~2000 Hz/random (compliant with MIL-STD-810G)
Operating shock	50(G), 11(ms), half-sine wave
Non-operating shock	1,500(G), 0.5(ms), half-sine wave

Note: This Environmental Specification table indicates the conditions for testing the device. Real world usages may affect the results.

4.4 Mean Time Between Failures (MTBF)

Mean Time Between Failures (MTBF) is predicted based on reliability data for the individual components in PV910-M280. The prediction result for PV910-M280 is more than 3,000,000 hours.

Note: The MTBF is predicated and calculated based on “Telcordia Technologies Special Report, SR-332, Issue 3” method.

4.5 Certification and Compliance

PV910-M280 complies with the following standards:

- FCC
- CE
- RoHS
- MIL-STD-810G

4.6 Endurance

The endurance of a storage device is predicted by Drive Writes Per Day based on several factors related to usage, such as the amount of data written into the drive, block management conditions, and daily workload for the drive. Thus, key factors, such as Write Amplifications and the number of P/E cycles, can influence the lifespan of the drive.

Table 4-4 Endurance Specifications

Capacity	Drive Writes Per Day
120 GB	2.02
240 GB	1.99
480 GB	1.96
960 GB	1.86

Notes:

- This estimation complies with JEDEC JESD-219, enterprise endurance workload of random data with payload size distribution..
- Flash vendor guaranteed 3D NAND TLC P/E cycle: 3K
- WAF may vary from capacity, flash configurations and writing behavior on each platform.
- 1 Terabyte = 1,024GB
- DWPD (Drive Writes Per Day) is calculated based on the number of times that user overwrites the entire capacity of an SSD per day of its lifetime during the warranty period. (3D NAND TLC warranty: 3 years)

© 2022 Apacer Technology Inc.

4.7 LED Indicator Behavior

The behavior of the PV910-M280 LED indicators is described in Table 4-5.

Table 4-5 LED Behavior

Location	LED	Description
LED A	DAS	LED blinks when the drive is being accessed



© 2022 Apacer Technology Inc.

5. Flash Management

5.1 Error Correction/Detection

PV910-M280 implements a hardware ECC scheme, based on the Low Density Parity Check (LDPC). LDPC is a class of linear block error correcting code which has apparent coding gain over BCH code because LDPC code includes both hard decoding and soft decoding algorithms. With the error rate decreasing, LDPC can extend SSD endurance and increase data reliability while reading raw data inside a flash chip.

5.2 Bad Block Management

Current production technology is unable to guarantee total reliability of NAND flash memory array. When a flash memory device leaves factory, it comes with a minimal number of initial bad blocks during production or out-of-factory as there is no currently known technology that produce flash chips free of bad blocks. In addition, bad blocks may develop during program/erase cycles. Since bad blocks are inevitable, the solution is to keep them in control. Apacer flash devices are programmed with ECC, page mapping technique and S.M.A.R.T to reduce invalidity or error. Once bad blocks are detected, data in those blocks will be transferred to free blocks and error will be corrected by designated algorithms.

5.3 Global Wear Leveling

Flash memory devices differ from Hard Disk Drives (HDDs) in terms of how blocks are utilized. For HDDs, when a change is made to stored data, like erase or update, the controller mechanism on HDDs will perform overwrites on blocks. Unlike HDDs, flash blocks cannot be overwritten and each P/E cycle wears down the lifespan of blocks gradually. Repeatedly program/erase cycles performed on the same memory cells will eventually cause some blocks to age faster than others. This would bring flash storages to their end of service term sooner. Global wear leveling is an important mechanism that levels out the wearing of all blocks so that the wearing-down of all blocks can be almost evenly distributed. This will increase the lifespan of SSDs.

5.4 Flash Translation Layer – Page Mapping

Page mapping is an advanced flash management technology whose essence lies in the ability to gather data, distribute the data into flash pages automatically, and then schedule the data to be evenly written. Page-level mapping uses one page as the unit of mapping. The most important characteristic is that each logical page can be mapped to any physical page on the flash memory device. This mapping algorithm allows different sizes of data to be written to a block as if the data is written to a data pool and it does not need to take extra operations to process a write command. Thus, page mapping is adopted to increase random access speed and improve SSD lifespan, reduce block erase frequency, and achieve optimized performance and lifespan.

© 2022 Apacer Technology Inc.

5.5 DataDefender™

Apacer's DataDefender is an advanced technology of power failure management which combines both firmware and hardware mechanisms to ensure data integrity. When power disruption occurs, the low voltage detector will be triggered. When this happens, the SSD's protection mechanism is activated and cuts off data transmission from the host. Once the power supply is resumed, the firmware protection mechanism will ensure the integrity of the firmware as well as the data already written into the NAND flash media.

5.6 TRIM

TRIM is a feature which helps improve the read/write performance and speed of solid-state drives (SSD). Unlike hard disk drives (HDD), SSDs are not able to overwrite existing data, so the available space gradually becomes smaller with each use. With the TRIM command, the operating system can inform the SSD which blocks of data are no longer in use and can be removed permanently. Thus, the SSD will perform the erase action, which prevents unused data from occupying blocks all the time.

5.7 Over-provisioning

Over-provisioning (OP) is a certain portion of the SSD capacity exclusively for increasing Garbage Collection (GC) efficiency, especially when the SSD is filled to full capacity or performs a heavy mixed-random workload. OP has the advantages of providing extended life expectancy, reliable data integrity, and high sustained write performance.

5.8 Hyper Cache Technology

Apacer proprietary Hyper Cache technology uses a portion of the available capacity as SLC (1bit-per-cell) NAND flash memory, called Hyper cache mode. When data is written to SSD, the firmware will direct the data to Hyper Cache mode, providing excellent performance to handle various scenarios in industrial use.

5.9 SMART Read Refresh™

Apacer's SMART Read Refresh plays a proactive role in avoiding read disturb errors from occurring to ensure health status of all blocks of NAND flash. Developed for read-intensive applications in particular, SMART Read Refresh is employed to make sure that during read operations, when the read operation threshold is reached, the data is refreshed by re-writing it to a different block for subsequent use.

5.10 NVMe Secure Erase

NVMe Secure Erase is an NVMe drive sanitize command currently embedded in most of the storage drives. Defined in NVMe specifications, NVMe Secure Erase is part of Format NVM command that allows storage drives to erase all user data areas. The erase process usually runs on the firmware level as most of the NVMe-based storage media currently in the market are built-in with this command. NVMe Secure Erase can securely wipe out the user data in the drive and protects it from malicious attack.

© 2022 Apacer Technology Inc.

6. NVMe Support Features

6.1 Host Memory Buffer

Host Memory Buffer (HMB) allows HOST to allocate system memory for SSD’s exclusive use in order to provide better performance and endurance, especially for DRAMless solutions.

© 2022 Apacer Technology Inc.

7. Security and Reliability Features

7.1 Advanced Encryption Standard

Advanced Encryption Standard (AES) is a specification for the encryption of electronic data. AES has been adopted by the U.S. government since 2001 to protect classified information and is now widely implemented in embedded computing applications. The AES algorithm used in software and hardware is symmetric so that encrypting/decrypting requires the same encryption key. Without the key, the encrypted data is inaccessible to ensure information security.

Notably in flash memory applications, AES 256-bit hardware encryption is the mainstream to protect sensitive or confidential data. The hardware encryption provides better performance, reliability, and security than software encryption. It uses a dedicated processor, which is built inside the controller, to process the encryption and decryption. This enormously shortens the processing time and makes it efficient.

7.2 Signed Firmware

Apacer's Signed Firmware technology is a secure way to update firmware. By including a digital signature, a firmware update will be authenticated by the Apacer SSD before a firmware update is performed. This extra layer of protection keeps drives secure.

7.3 Thermal Sensor

Apacer Thermal Sensor is a digital temperature sensor with serial interface. By using designated pins for transmission, storage device owners are able to read temperature data.

7.4 Thermal Throttling

Thermal throttling can monitor the temperature of the SSD equipped with a built-in thermal sensor. This method can ensure the temperature of the device stays within temperature limits by drive throttling, i.e. reducing the speed of the drive when the device temperature reaches the threshold level, so as to prevent overheating, guarantee data reliability, and prolong product lifespan. When the temperature exceeds the maximum threshold level, thermal throttling will be triggered to reduce performance step by step to prevent hardware components from being damaged. Performance is only permitted to drop to the extent necessary for recovering a stable temperature to cool down the device's temperature. Once the temperature decreases to the minimum threshold value, transfer speeds will rise back to its optimum performance level.

7.5 End-to-End Data Protection

End-to-End Data Protection is a feature implemented in Apacer SSD products that extends error control to cover the entire path from the host computer to the drive and back, and that ensures data integrity at multiple points in the path to enable reliable delivery of data transfers. Unlike ECC which does not exhibit the ability to determine the occurrence of errors throughout the process of data transmission, End-to-End Data Protection allows SSD controller to identify an error created anywhere in the path and report the error to the host computer before it is written to the drive. This error-checking and error-reporting mechanism therefore guarantees the trustworthiness and reliability of the SSD.

© 2022 Apacer Technology Inc.

8. Software Interface

8.1 Command Set

Table 8-1 summarizes the commands supported by PV910-M280.

Table 8-1 Admin Commands

Opcode	Command Description
00h	Delete I/O Submission Queue
01h	Create I/O Submission Queue
02h	Get Log Page
04h	Delete I/O Completion Queue
05h	Create I/O Completion Queue
06h	Identify
08h	Abort
09h	Set Features
0Ah	Get Features
0Ch	Asynchronous Event Request
10h	Firmware Activate
11h	Firmware Image Download
14h	Device Self-test

Table 8-2 Admin Commands – NVM Command Set Specific

Opcode	Command Description
80h	Format NVM

Table 8-3 NVM Commands

Opcode	Command Description
00h	Flush
01h	Write
02h	Read
09h	Dataset Management

© 2022 Apacer Technology Inc.

8.2 S.M.A.R.T.

SMART, an acronym for Self-Monitoring, Analysis and Reporting Technology, is an open standard that allows a hard disk drive to automatically detect its health and report potential failures. When a failure is recorded by SMART, users can choose to replace the drive to prevent unexpected outage or data loss. Moreover, SMART can inform users of impending failures while there is still time to perform proactive actions, such as copy data to another device.

Table 8-4 SMART (02h)

Byte	Length	Description
0	1	Critical Warning
1-2	2	Composite Temperature (PCB Sensor)
3	1	Available Spare
4	1	Available Spare Threshold
5	1	Percentage Used (Average Erase Count / P/E Cycle Count)
6-31	26	Reserved
32-47	16	Data Units Read
48-63	16	Data Units Written
64-79	16	Host Read Commands
80-95	16	Host Write Commands
96-111	16	Controller Busy Time
112-127	16	Power Cycles
128-143	16	Power On Hours
144-159	16	Unsafe Shutdowns
160-175	16	Media and Data Integrity Errors
176-191	16	Number of Error Information Log Entries
192-195	4	Warning Composite Temperature Time
196-199	4	Critical Composite Temperature Time
200-201	2	Temperature Sensor 1: Controller Temperature
202-203	2	Temperature Sensor 2: PCB Temperature
204-205	2	Temperature Sensor 3: NAND Flash Temperature
206-207	2	Temperature Sensor 4
208-209	2	Temperature Sensor 5
210-211	2	Temperature Sensor 6
212-213	2	Temperature Sensor 7
214-215	2	Temperature Sensor 8
216-511	296	Reserved

© 2022 Apacer Technology Inc.

Table 8-5 SMART (C0h)

Byte	Length	Description
0-255	256	Reserved
256-257	2	SSD Protect Mode
258-261	4	Host Read UNC Count
262-265	4	PHY Error Count
266-269	4	CRC Error Count
270-273	4	Total Early Bad Block Count
274-277	4	Total Later Bad Block Count
278-281	4	Max Erase Count
282-285	4	Average Erase Count
286-289	4	Program Fail Count
290-293	4	Erase Fail Count
294-301	8	Flash Write Sector
302-305	4	Total Spare Block
306-309	4	Current Spare Block
310-313	4	Read Retry Count
314-511	210	Reserved

© 2022 Apacer Technology Inc.

9. Electrical Specifications

9.1 Operating Voltage

Table 9-1 lists the supply voltage for PV910-M280.

Table 9-1 Operating Range

Item	Range
Supply Voltage	3.3V ± 5%

9.2 Power Consumption

Table 9-2 lists the power consumption for PV910-M280.

Table 9-2 Power Consumption (Unit: mA)

Capacity / Mode	120 GB	240 GB	480 GB	960 GB
Active (Max.)	600	650	695	745
Idle	145	140	145	140

Notes:
- All values are typical and may vary depending on flash configurations or host system settings.
- Power consumption is measured using CrystalDiskMark 8.0.4.

© 2022 Apacer Technology Inc.

10. Mechanical Specifications

10.1 Single Side

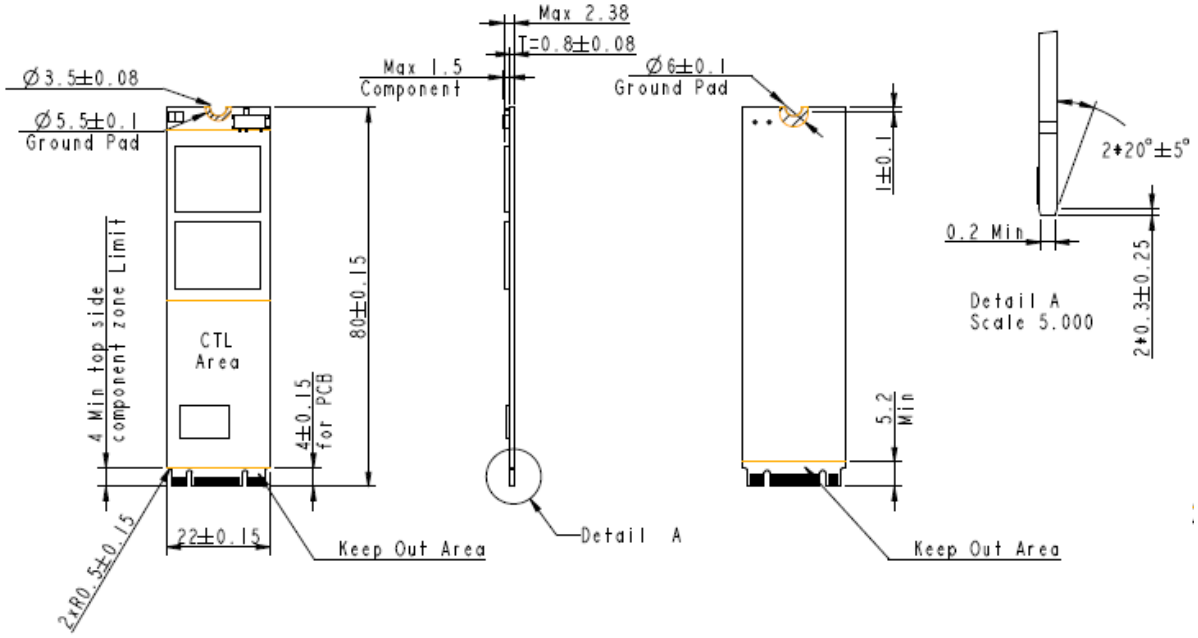

Figure 10-1 Dimensions – Single Side

10.2 Double Side

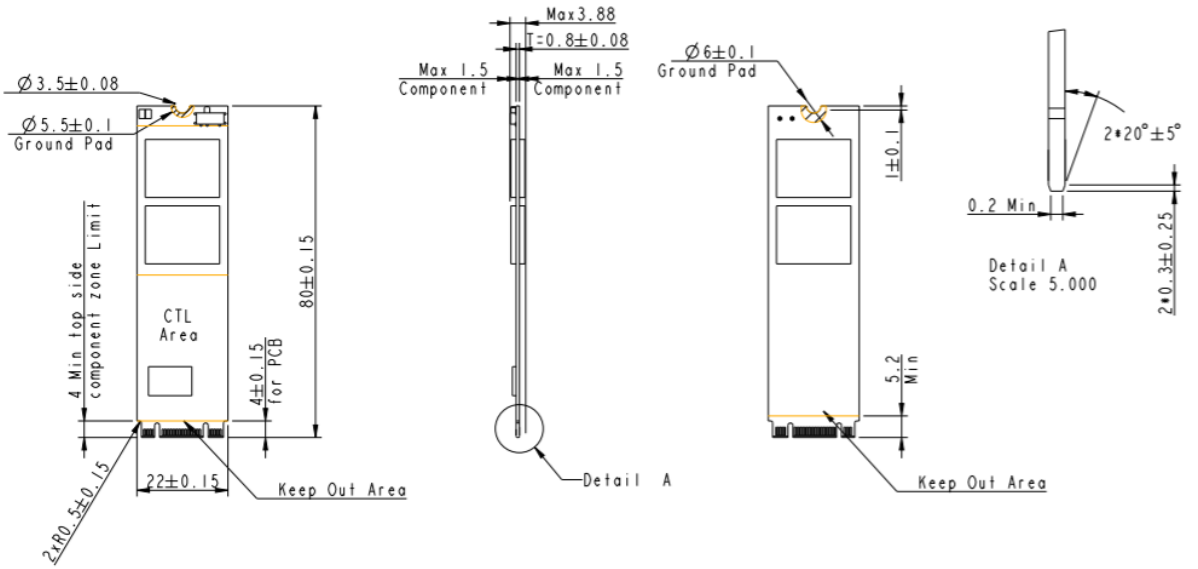

Figure 10-2 Dimensions – Double Side

Unit: mm

© 2022 Apacer Technology Inc.

10.3 Net Weight

Table 10-1 Net Weight

Capacity	Net Weight (g ± 5%)
120GB	5.39
240GB	5.39
480GB	5.53
960GB	6.61

© 2022 Apacer Technology Inc.

11. Product Ordering Information

11.1 Product Code Designations

Apacer's PV910-M280 is available in different configurations and densities. See the chart below for a comprehensive list of options for the PV910-M280 series devices.

Code	1	2	3	4	5	6	7	8	9	10	11	12	13	14	15	16
	B	9	2	.	9	1	5	X	X	X	.	0	0	2	0	7

Code 1-3 (Product Line & Form Factor)	PCIe M.2 2280
Code 5-6 (Model/Solution)	PV910-M280
Code 7-8 (Product Capacity)	5H: 120GB 5J: 240GB 5K: 480GB 5L: 960GB
Code 9 (Flash Type & Product Temp)	G: 3D TLC Standard Temperature H: 3D TLC Wide Temperature
Code 10 (Product Spec)	A: Single side B+M key B: Double side B+M key
Code 12-14 (Version Number)	Random numbers generated by system
Code 15-16 (Firmware Version)	Thermal Sensor OP

© 2022 Apacer Technology Inc.

11.2 Valid Combinations

The following table lists the available models of the PV910-M280 series which are in mass production or will be in mass production. Consult your Apacer sales representative to confirm availability of valid combinations and to determine availability of new combinations.

Capacity	Standard Temperature	Wide Temperature
120GB	B92.915HGA.00207	B92.915HHA.00207
240GB	B92.915JGA.00207	B92.915JHA.00207
480GB	B92.915KGA.00207	B92.915KHA.00207
960GB	B92.915LGB.00207	B92.915LHB.00207

© 2022 Apacer Technology Inc.

Revision History

Revision	Description	Date
1.0	Initial release	4/26/2022
1.1	- Updated Performance and Power Consumption on Specifications Overview page - Updated the description for pins 30, 56, 58 and 67 at Table 3-1 - Updated Table 4-2 and CDM version at the notes - Updated endurance rating and warranty period at Endurance on Specifications Overview page and 4.6 Endurance - Updated Table 9-2	7/5/2022
1.2	Updated pin type and description of pins 12-19, 46, 48 and 68 at Table 3-1	8/17/2022
1.3	Modified pin type and description of pins 5, 7, 11, 23 and 25 at Table 3-1	11/22/2022

© 2022 Apacer Technology Inc.

Global Presence

Taiwan (Headquarters)
Apacer Technology Inc.
1F., No.32, Zhongcheng Rd., Tucheng Dist.,
New Taipei City 236, Taiwan R.O.C.
Tel: 886-2-2267-8000
Fax: 886-2-2267-2261
amtsales@apacer.com

U.S.A.
Apacer Memory America, Inc.
46732 Lakeview Blvd., Fremont, CA 94538
Tel: 1-408-518-8699
Fax: 1-510-249-9551
sa@apacerus.com

Japan
Apacer Technology Corp.
6F, Daiyontamachi Bldg., 2-17-12, Shibaura, Minato-Ku,
Tokyo, 108-0023, Japan
Tel: 81-3-5419-2668
Fax: 81-3-5419-0018
jpservices@apacer.com

Europe
Apacer Technology B.V.
Science Park Eindhoven 5051 5692 EB Son,
The Netherlands
Tel: 31-40-267-0000
Fax: 31-40-290-0686
sales@apacer.nl

China
Apacer Electronic (Shanghai) Co., Ltd
Room D, 22/FL, No.2, Lane 600, JieyunPlaza,
Tianshan RD, Shanghai, 200051, China
Tel: 86-21-6228-9939
Fax: 86-21-6228-9936
sales@apacer.com.cn

India
Apacer Technologies Pvt Ltd,
1874, South End C Cross, 9th Block Jayanagar,
Bangalore-560069, India
Tel: 91-80-4152-9061/62
Fax: 91-80-4170-0215
sales_india@apacer.com

© 2022 Apacer Technology Inc.